Contract Documents

CITY PROJECT NO. 801 0021
CALTRANS CONTRACT 08-323034
PROJECT ID 0812000059
SR-60/MORENO BEACH DRIVE INTERCHANGE IMPROVEMENTS (PHASE 2)

JANUARY 2021

CITY OF MORENO VALLEY
PUBLIC WORKS DEPARTMENT
CAPITAL PROJECTS DIVISION
14177 FREDERICK STREET
P.O. BOX 88005
MORENO VALLEY, CA 92552

REGISTERED PROFESSIONAL ENGINEER
MARGERY ANN LAZARUS
C 43526
CIVIL
STATE OF CALIFORNIA

Prepared under the Supervision of:

Margery Ann Lazarus, PE — Date 1-27-21

Approved By:

Michael L. Wolfe, PE — Date 1/28/2021
RCE No. 65623

CONTRACT DOCUMENTS

PROJECT NO. 801 0021
SR-60/MORENO BEACH DRIVE INTERCHANGE IMPROVEMENTS
(PHASE 2)

PREAMBLE

The City Special Provisions contained herein supplement and/or modify the General Provisions and Technical Provisions of the 2018 Standard Specifications and 2018 Standard Plans of the State of California, Department of Transportation, as amended by Revised Standard Specifications dated November 19, 2020, Amendments, are applicable to the Work unless amended, modified, and/or supplemented by the Special Provisions. The City Special Provisions are arranged in accordance with the numbering format used by the California Department of Transportation, with subsections added where necessary.

Each and every provision of law required to be inserted in the Contract Documents shall be deemed to be inserted therein, and the Contract Documents shall be read and enforced as though it were included therein.

TABLE OF CONTENTS

***Divisions refer to the California Department of Transportation numbering format.**

Section	Title
(Division I)	
00001	Cover Sheet
00002	Preamble
00003	Table of Contents
00020	Notice Inviting Bids
00100	Instructions to Bidders
00300	Bidder's Proposal [including Non-Lobbying Certification, Equal Employment Opportunity Certification, Debarment and Suspension Certification
00301	Bid Schedule Notice
00302	Bidder's Bond
00303	Contractor's Statement
00401	Exhibit 12-B – Bidder's List of Subcontractors (DBE and Non-DBE)
00402	Exhibit 15-G – Construction Contract DBE Commitment
00403	Workers' Compensation Certification
00404	Public Contract Code Statement and Questionnaire
00405	Mandatory EMWD Experience Record
00500	Agreement Between City and Contractor
00600	Contractor's Bonds
00601	Faithful Performance Bond
00602	Labor and Materials Payment Bond
00603	City of Moreno Valley Supplementary General Conditions
00604	Contract Provisions for Non-Federal Entity Contracts Under Federal Awards
00605	Federal Wage Determination (Rates)
00700	Caltrans Standard Specifications, dated 2018 [not provided]
(Divisions II thru X)	
	Special Provisions
00701	General Provisions [refer to Table of Contents (TOC) pages 1 to 64]
00702	Technical Provisions, Scope of Work, and Caltrans Standard Plans List [refer to TOC pages 1 to 147]
(Division XI)	
00800	List of Appendices A. Additive Alternate Bid No 2 - Rock Mulch & Erosion Control B. Community Workforce Agreement C. Southern California Edison Plans

D. Caltrans Encroachment Permit Application
E. Environmental Commitment Record
F. Caltrans Revised Standard Plans (RSP's)
G. City Encroachment Permit Packet
H. Line K-1 Special Provisions
I. EMWD Specifications
J. MOU District Transportation Department_March 2020
K. Frontier Communication Relocation of Facilities Plans
L. Right of Entry Agreement for Calvary Chapel
M. U.S. Army Corps of Engineers 404 Permit
N. CDFG 1600-2019-0252-R6_Agreement (60MB)
O. CDFG 1600-2019-0104-R6_Agreement (Line K-1)
P. RWQCB 401 Permit (Line K-1) 332014
Q. RWQCB 401 Permit (60MB) 332019
R. Certified Payroll Forms
S. Change Order Forms
T. Dig Alert
U. Red Imported Ant Cooperative Agreement
V. Solid Waste Disposal and Recycling Reports
W. City Standard Plans

NOTICE INVITING BIDS

NOTICE IS HEREBY GIVEN THAT THE CITY OF MORENO VALLEY, hereinafter referred to as "the City" or "City," will receive electronic bids **prior to** the "Bid Deadline" established below, for the Contract for construction of the Work of the "Project" generally described as:

SR-60/MORENO BEACH DRIVE INTERCHANGE IMPROVEMENTS
(PHASE 2)
CITY PROJECT NO. 801 0021
CALTRANS CONTRACT 08-323034
PROJECT ID 0812000059

Bid Deadline:	**March 12, 2021 prior to 5:00 p.m.**
Place for Receipt of Bids and Bid Opening Results:	Bids shall be received electronically only on the City of Moreno Valley Vendor Portal through PlanetBids. The link to register to become a prospective bidder, electronically bid on this Project and review Bid tabulation results ("Bid Opening") can be found at the following address: http://www.planetbids.com/portal/portal.cfm?CompanyID=24660
Contract Documents Available:	Contract Documents (including City Special Provisions and Project Plans, but not including Standard Plans, Standard Specifications, or Reference Specifications) shall be obtained from the link/website above.

Total Cost per set: $75.00

All fees listed above are non-refundable. The Contract Documents must be purchased online; they cannot be purchased or mailed from City Hall. For additional information regarding the purchase of Contract Documents, please call the Department of Public Works, Capital Projects Division at 951.413.3130.

Bidders are solely responsible for on time submission of their electronic bid. The City will only consider bids that have been transmitted successfully and have been issued an ebid confirmation number with a time stamp from the Bid Management System indicating that the bid was submitted successfully. Transmission of bids by any other means will not be accepted. Bidders shall be solely responsible for informing themselves with respect to the proper utilization of the bid management system, for ensuring the capability of their computer system to upload the required documents, and for the stability of their internet service. Failure of the bidders to successfully submit electronic bids shall be at the bidders' sole risk and no relief will be given for late and/or improperly submitted bids. Bidders experiencing any technical difficulties with the bid submission process may contact PlanetBids at (818) 992-1771. Neither the City, nor PlanetBids, makes any guarantee as to the timely availability of assistance, or assurance that any given problem will be resolved by the bid submission deadline.

Deadline for Bidder Requests for Information	All Requests for Information (RFI's) must be submitted via the City of Moreno Valley Vendor Portal through PlanetBids. Any RFI received after the date and time specified herein will not be considered. Date/Time: **February 24, 2021, prior to 5:00 p.m.**
Special Notice	**Disadvantaged Business Enterprise ("DBE") Participation**: DBEs and other small businesses are strongly encouraged to participate in the bidding process for this project. The Contractor is recommended to make work available to DBEs and select work parts consistent with the available DBEs, including subcontractors, suppliers, service providers, and truckers.

1. Date of Commencement and Time for Completion: The Contractor shall complete construction of the Project within the **Contract Time of Three Hundred Sixty Seven (367) Working Days for Base Bids 1 through 4 plus Additive Alternate Bid 1 and Four Hundred Forty (440) Working Days for Plant Establishment. If Additive Alternate Bid 2 is chosen, deduct Thirty Seven (37) Working Days from Three Hundred Sixty Seven (367) Working Days for a total of Three Hundred Thirty (330) Working Days. The Plant Establishment duration remains the same.** See **Paragraph 5** of the Agreement for details regarding the initial Notice to Proceed to Fulfill Preconstruction Requirements, Notice to Proceed with Order of Materials and subsequent Notice to Proceed with Construction.

2. Bidder Information and Addenda: Each Bidder shall register to become a Registered Bidder via the City of Moreno Valley Vendor Portal through PlanetBids. Addenda, if any, shall be issued via email through the PlanetBids Vendor Portal. It is the Contractor's responsibility to ensure the email utilized in the Planet Bids Vendor Portal is current and accurate and it is further the Contractor's responsibility to actively check the Portal and email for the issuance of Addenda. The City reserves the right to extend the Bid Deadline by issuing an Addendum to Bidders no later than 72 hours prior to the Bid Deadline.

3. Bid Forms: The Bid Schedule of prices, Subcontractor List, and acknowledgement of receipt of Addenda, if any, shall be submitted using only the online electronic forms through the City of Moreno Valley Vendor Portal on the PlanetBids website at the above referenced address (collectively "Electronic Bid Forms"). Paper copies will not be accepted. The unit prices for each Bid Item shall be properly entered in the online electronic Bid Schedule.

In addition, each Bidder must scan and submit the following documents with its electronic bid on the City's Bid Forms.

		Page
1.	Bidder's Proposal, including Non-Lobbying Certification, Equal Employment Opportunity Certification, Debarment and Suspension Certification	00300
2.	Bid Schedule Notice	00301
3.	Bidder's Bond	00302
4.	Contractor's Statement	00303
5.	Exhibit 12-B Bidder's List of Subcontractors (DBE and Non-DBE)	00401
6.	Exhibit 15-G – Construction Contract DBE Commitment	00402
7.	Worker's Compensation Certification	00403
8.	Public Contract Code Statement and Questionnaire	00404
9.	Mandatory EMWD Experience Record/Resumes	00405

The Bidder may utilize a cashier's or certified check in lieu of a Bidder's Bond in the amount of ten percent (10%) of the total bid. If a cashier's or certified check is used, it shall be delivered to the City Clerk in a sealed envelope at 14177 Frederick Street, Moreno Valley, CA 92553 prior to the Bid Deadline specified herein.

If any Bidder makes any alteration or otherwise deviates from, or makes any qualifications of the Bidder's Proposal forms in separate documents submitted with the Bidder's Proposal, the Bid may be considered non-responsive. All Bidders' Proposals shall be evaluated on the basis of the Engineer's estimate of the quantities of Work to be performed.

4. Bid Security: Each Bid shall be accompanied by Bid Security, in the form of a certified check, cashier's check, or Bidder's Bond executed by a California-admitted surety insurer (as defined by California Code of Civil Procedure §§ 995.120 and 995.311) in an amount of not less than **ten percent (10%)** of the amount of the total Bid Price. Such Bid Security shall guarantee that the Bidder, if his or her Proposal is accepted, will execute the Agreement, secure and furnish proof of Commercial General Liability, Automobile, and Workers' Compensation Insurance as required by the Contract Documents, furnish a Faithful Performance Bond in the amount of one hundred percent (100%) of the total Contract Price, and furnish a Labor and Materials Payment Bond in the amount of one hundred percent (100%) of the total Contract Price, within ten (10) Working Days after Contract award. Failure to execute and furnish said Contract Documents within said 10 Working Days shall be just cause for the annulment of the award and forfeiture of the Bid Security pursuant to the provisions of Section 20172 of the California Public Contract Code. The City will retain the Bid Security of the first, second, and third lowest responsible Bidders until such time as the Agreement is executed. The Bid Security submitted by all other Bidders will be released within thirty (30) days after the date of the award of the Contract. Submission of the bid security shall be in accordance with the instructions provided in Paragraph 3, "Bid Forms", contained herein.

5. Public Works Contractor Registration: California law provides that "A contractor or subcontractor shall not be qualified to bid on, be listed in a bid proposal, subject to the requirements of Section 4104 of the Public Contract Code, or engage in the performance of any contract for public work, as defined in this chapter, unless currently registered and qualified to perform work pursuant to Labor Code Section 1725.5." Go to http://www.dir.ca.gov/Public-Works/PublicWorks.html, and look under "Contractor Registration" for more information and to register. Pursuant to the above law, no contractor or subcontractor may be listed on a bid proposal for a public works project unless registered with the Department of Industrial Relations pursuant to Labor Code Section 1725.5 [with limited exceptions from this requirement for bid purposes only under Labor Code Section 1771.1(a)]. Additionally, no contractor or subcontractor may be awarded a contract for public work on a public works project unless registered with the Department of Industrial Relations pursuant to Labor Code Section 1725.5. The City of Moreno Valley will not accept a Bid, nor will it contract or subcontract without proof of the contractor or subcontractor's current registration to perform public works pursuant to Section 1725.5.

This project is also subject to compliance monitoring and enforcement by the Department of Industrial Relations. All contractors and subcontractors must furnish electronic certified payroll records directly to the Labor Commissioner (aka Division of Labor Standards Enforcement)(except those listed as Exemptions by the DIR) in the "eCPR data system".

6. Contractor's License: No Bid will be accepted from a Bidder, at the Bid Deadline, who is not fully and properly licensed as a contractor in accordance with Chapter 9 of Division 3 of the

California Business and Professions Code Section 7028.15. At the Bid Deadline, the prime Contractor must hold an active Class "A" contractor's license issued by the California Contract State License Board or a combination of Class "C" specialty contractors licenses issued by the California Contract State License Board necessary for the performance of all Work to be performed by the prime Contractor. All Subcontractors shall be properly licensed.

Bidder's attention is called to the end of this Section 1 or EMWD's Specifications. The following requirements are **mandatory**: All bidders or their subcontractor must provide a detailed 3-year experience record showing successful completion, as a General Contractor (Class A and/or C-34 license), of at least three (3) similar water line projects within the last three (3) years on the attached forms when submitting your bid. Additionally, bidders must include resumes of key personnel proposed to work on this project when submitting your bid. See page BR-2 for Detailed Experience Record form.

7. City's Rights Reserved: Within such limits as may be prescribed by law, the City Council of the City of Moreno Valley reserves the right to reject any and all Bids, to accept, reject or waive any variances or informalities in a Bid or in the bidding, or to accept the Bid or Bids that best serve the interests of the City.

8. Work Performed by Contractor: The successful Bidder shall perform, with its own organization, Contract Work amounting to at least 50 percent (50%) of the Contract Price, except that any designated "Specialty Items" may be performed by subcontract and the amount of any such "Specialty Items" may be deducted from the Contract Sum before computing the amount of Work required to be performed by the Contractor. See Section **5-1.13A** of the **City Special Provisions**.

9. Payment of Prevailing Wage Rates: This Project is subject to the provisions of Labor Code Section 1720 et seq., and the requirements of Title 8 of the California Code of Regulations Section 16000 et seq., which govern the payment of prevailing wages on public works projects. The Director of the Department of Industrial Relations, State of California (DIR) pursuant to the California Labor Code, has determined the general prevailing rates of wages in the locality in which the Work is to be performed. Said rates are on file with the Capital Projects Division of the City of Moreno Valley and copies will be made available to any interested party on request during regular business hours and are also available on the Internet at the California Department of Industrial Relations website: http://www.dir.ca.gov/dlsr/DPreWageDetermination.htm (California prevailing wage rates). These rates shall be the minimum wage rates for this project. Future effective general prevailing wage rates, which have been predetermined and are on file with the California Department of Industrial Relations are referenced but not printed in the general prevailing wage rates. The Contractor shall post a copy of said rates at the job site throughout the period of work on this project. The Contractor shall see that all employees of both the prime Contractor and subcontractors are being paid rates equal to or greater than the said rates. See **Section 7-1.02K** of the **City Special Provisions**.

10. Substitution of Securities: Pursuant to California Public Contract Code Section 22300, the Contractor may substitute approved securities for any monies withheld by the City to ensure performance of the Work. At the request and sole expense of the Contractor, securities equivalent to the amount withheld shall be deposited with the City, or with a state or federally chartered bank in California as escrow agent, who shall pay such monies to the Contractor after satisfactory completion of the Contract. Securities eligible for investment under this section shall include those listed in Section 16430 of the Government Code, bank or savings and loan certificates of deposit,

interest-bearing demand deposit accounts, and standby letters of credit. The Contractor shall be the beneficial owner of any securities substituted for monies withheld and shall receive any dividends and interest thereon. Alternatively, the Contractor may request that the City, at the expense of the Contractor, make payment of retention earned directly to the escrow agent. Notwithstanding the foregoing, such Contractor shall have thirty (30) Calendar Days following award of the Contract to submit a written request to the City to permit the substitution of securities for retention or payment to an escrow agent; failure to do so shall be deemed a waiver of the right.

11. City of Moreno Valley Business License: The Contractor and all Subcontractors shall obtain and keep current a City of Moreno Valley Business License prior to commencement and throughout the duration of the Work.

12. Withdrawal of Bids: Bids shall remain open and valid for **ninety (90) Calendar Days** after the Bid Deadline. Bids may be withdrawn electronically on the PlanetBids Vendor Portal prior to the Bid Deadline.

No bid may be withdrawn or changed after the Bid Deadline, except as otherwise provided by law. The lowest Bidder may only request relief of its Bid in accordance with Public Contract Code Section 5100 et seq. Each Bidder agrees by submitting a Bid that its Bid shall remain open, is irrevocable, and may not be modified, withdrawn, or cancelled for a period of at least **ninety (90) Calendar Days** after the Bid Deadline.

13. Contract Award/Additive Alternate Bid Items: Refer to **Paragraph 19** of the Instructions to Bidders, **Award of Contract**.

14. Subcontractors: Each Bidder shall submit, in the electronic Bid Form provided in the City of Moreno Valley's Vendor Portal on the PlanetBids website, a list of Subcontractors to be used on this Project as required by the Subletting and Subcontracting Fair Practices Act, California Public Contract Code Section 4100 *et seq*.

15. Insurance: Contractors and all Subcontractors must provide the insurance described in **Paragraph 7** of the Agreement.

16. Performance and Payment Bonds: Refer to **Paragraph 21** of the Instructions to Bidders.

17. Liquidated Damages: If the awarded Contractor fails to complete the Work within the Contract Time, City shall assess liquidated damages against Contractor at the daily rate established in **Paragraph 6** of the **Agreement** in **Section 00500**.

18. Disadvantaged Business Enterprises: As required by federal law, the State of California, Department of Transportation ("Caltrans") has established a statewide overall Disadvantaged Business Enterprise ("DBE") goal. In order to ascertain whether that statewide overall DBE goal is being achieved, Caltrans encourages the use of DBEs on projects funded by Caltrans even though no federal-aid is provided. To assist Bidders in ascertaining DBE availability for specific items of work, the City advises that it has determined that DBEs could reasonably be expected to compete for subcontracting opportunities on this Project, and their likely availability for work on this Project is 17.0%**.**

19. Community Workforce Agreement: If the contract cost is $1,000,000 or more, the Contractor and each Subcontractor must execute a Letter of Assent which formally binds the

Contractor and each Subcontractor to the terms of the Community Workforce Agreement by and Between the City of Moreno Valley and San Bernardino/Riverside Counties Building and Construction Trades Council, AFL-CIO and the Signatory Craft Councils and Unions ("CWA") entered into on August 20, 2020. **Refer to Appendix B for a copy of the CWA and the Letter of Assent**. By submitting a bid for this project, Contractor acknowledges that it has read the CWA, and will execute the Letter of Assent binding itself to the terms of the CWA if the project cost is $1,000,000 or more, and will further ensure that each subcontractor will sign the Letter of Assent prior to performing any work on the project. Furthermore, Contractor is required to attend a job fair (or the equivalent forum due to the pandemic) held by or recommended by the San Bernardino/Riverside Counties Building and Construction Trades Council, AFL-CIO and the Signatory Craft Councils and Unions.

20. State of California: The improvements contemplated in the performance of this Contract, over which the State of California (Caltrans) shall exercise general supervision. The State of California shall therefore have the right to assume full and direct control over this Contract whenever the State of California, at its sole discretion, determines that its responsibility to the United States so requires. In such cases, the State Contract Act (Public Contract Code Section 10100 *et seq.*) shall govern this Contract.

21. Technical Information: For technical information relating to the details of this Project and bidding requirements, submit all RFI's via the project Q&A tab within the City of Moreno Valley Vendor Portal in PlanetBids:
(http://www.planetbids.com/portal/portal.cfm?CompanyID=24660).

Any RFI received after the date and time specified herein will not be considered.

M. Wolfe

Date: 1/28/2021

Michael L. Wolfe, PE
Public Works Director/City Engineer
City of Moreno Valley

INSTRUCTIONS TO BIDDERS

1. **Scope of Project**: The Contractor shall furnish, to the satisfaction of the Engineer, all labor, materials, tools, equipment, and incidentals, unless otherwise specified, to construct and complete the Work in compliance with the Contract Documents.

2. **General**: Information contained in these Instructions to Bidders is supplemental to information contained in the Notice Inviting Bids. The meanings of all capitalized terms not defined herein are defined in the Standard Specifications or the City Special Provisions.

3. **Examination of Site and Contract Documents**: The Bidder, at its sole cost and expense, is required to examine carefully the Contract Documents and the Project site to become fully acquainted with the conditions affecting the Work. The failure of a Bidder to receive or examine any of the Contract Documents or to inspect the site shall not relieve such Bidder from any obligation with respect to the Bid, the Contract, or the Work required under the Contract Documents. The City assumes no responsibility or liability to any Bidder for, nor shall the City be bound by, any understandings, oral representations or oral agreements of the City's agents, employees or officers concerning the Contract Documents, or the Work made prior to execution of the Contract. By submitting a Bid, Bidder represents: (1) that Bidder has read and understands the Contract Documents; (2) the Bid is made in compliance with the Contract Documents and is based upon the labor, materials, equipment, and systems required by the Contract Documents; (3) that Bidder understands that all labor, materials, equipment, and systems to be furnished for the Work shall be furnished for the prices bid; (4) that it has visited the Project site, familiarized itself with the local conditions under which the Work is to be performed; (5) that it is fully experienced, qualified and competent to perform the Work set forth in the Contract Documents; (6) that it shall not damage or endanger and shall preserve and protect adjacent properties; (7) that it is properly equipped, organized and financed to perform the Work; (8) that it is properly permitted and licensed by the California Contractors State Licensing Board to perform the Work; (9) that it has familiarized itself with all conditions bearing upon transportation, disposal, handling and storage of materials; (10) that it has familiarized itself with the availability of labor, water, electric power, and roads; (11) that it has familiarized itself with uncertainties of weather, or similar physical conditions at the Project site; (12) that it has familiarized itself with the character of equipment and facilities needed preliminary to and during performance of the Work; (13) that it has familiarized itself with the staging and material storage constraints of the Project site and surrounding buildings and will confine its staging and storage operations to approved areas; (14) that it will coordinate its construction activities with the other contractors performing work on the Project site, if any, including, but not limited to, any Separate Contractor retained by the City; and (15) that the Bidder has checked figures set forth in the Bid Schedule and understands that neither the City, nor the Moreno Valley Housing Authority, nor the Moreno Valley Community Services District, nor the Western Riverside Council of Governments, nor the Riverside County Flood Control and Water Conservation District, nor Caltrans, nor any officer or employee therefore will be responsible for any misunderstandings, errors, or omissions on the part of the Bidder in submitting its Bid.

4. **Urban Runoff**: The Bidder certifies to the City that he/she has trained his/her employees and Subcontractors, if any, for Urban Runoff management and has included sufficient sums in the Bid Price to cover such costs of said training as stipulated in the most current Regional Water Quality Control Board requirements, including the Municipal Separate Storm Sewer System NPDES Permit. The Contractor is responsible for all clean up and payment of all fines levied as

a result of any illegal discharge (as defined in said NPDES permit) occurring as a result of the Contractor's Work and/or operations.

5. **Estimated Quantities**: The estimated quantities set forth in the Bid Schedule are approximate only, and are provided only as a basis for the comparison of Bids. The City does not guarantee, expressly or by implication, that the actual amount of Work will correspond therewith, and reserves the right to increase or decrease the amount of any portion of the Work, or to omit portions of the Work, or delete any Bid Items of Work as may be deemed necessary or advisable by the Engineer. Payment shall be made only for actual quantities of Contract items constructed in accordance with the Contract Documents**.** See **Section 9-1.17** of the **Standard Specifications** and **City Special Provisions.**

6. **Interpretation of Contract Documents**: Discrepancies in and omissions from the Contract Documents shall, at once, be brought to the attention of the City. If any Bidder contemplating submitting a Bid for the Project is in doubt as to the true meaning of any part of the bidding requirements or Contract Documents, or who finds discrepancies, errors or omissions therein or who finds variances in any of the Contract Documents with Applicable Law, such Bidder may submit a written request for an interpretation or correction thereof to the City via the City's electronic bidding system specified in the Notice Inviting Bids. All Bidders shall submit such written requests to the City on or before the deadline established in the Notice Inviting Bids unless modified by Addendum (i.e., at least **five (5) Working Days** prior to the Bid Deadline, unless modified by Addendum). Any interpretation or correction will be made only by Addenda duly issued by the City, via the City's electronic bidding system. The City will not be responsible for any other explanations or interpretations. No oral agreement or conversation with any officers, employees, or agents of the City, either before or after execution of the Contract, shall affect or modify any of the terms of obligations contained in any of the Contract Documents.

7. **Addenda**: Before the Bid Deadline, the City may modify the Work, the Contract Documents, or any portion(s) thereof by the issuance of written Addenda disseminated to all Registered Bidders via the City's electronic bidding system. All Addenda shall be acknowledged electronically within the City's Vendor Portal in PlanetBids and shall become a part of the Contract Documents. The cost of performing Work described in the Addenda shall be included in the Bid. If any Addenda have been issued by the City but are not acknowledged by the Bidder in the Bidder's Proposal, the Bid may be rejected as non-responsive. All Addenda or Bulletins will be issued via email through the Planet Bids Vendor Portal. It is the Contractor's responsibility to ensure the email utilized in the Planet Bids Vendor Portal is current and accurate and it is further the Contractor's responsibility to actively check the email for Addenda or Bulletin updates.

8. **Electronic Submission of Bid**: Bids shall be submitted electronically by completing the electronic Bid Schedule of prices for the Work, the Subcontractor List, and acknowledgement of receipt of Addenda, and uploading scans of the other completed Bid forms identified in **Paragraph 3** of the Notice Inviting Bids using the City of Moreno Valley Vendor Portal through PlanetBids at the above referenced address. Paper copies will not be accepted.

9. **Electronic Bid Schedule**: The Bidder shall properly enter a unit price or lump sum price for each Bid Item in the through PlanetBids. A total price for each bid item, the subtotal, and the grand total will be calculated automatically by the PlanetBids system.

10. **Signature**: The Bidder's Proposal form must be signed (see pages 00300-01 and 00300-02) where so indicated by the person or persons duly authorized to sign on behalf of the Bidder

and state the legal name of the Bidder and the nature of the legal form of business of Bidder. By signing the Bidder's Proposal, the person signing represents that he or she has legal authority to bind the Bidder to the Contract for the Work. Bids without valid required signatures shall be considered non-responsive. If the Bid submitted by a partnership, the Bidder's Proposal shall include the partnership name and the name and address of each partner, and shall be signed by one of the general partners. If the Bid is submitted by a corporation, two (2) corporate officers having authority from the corporation shall sign, unless the corporation has a corporate resolution stating that one person is authorized to sign on behalf of all officers, and such resolution is attached to the Bidder's Proposal.

11. **Bid Security**: As set forth in the Notice Inviting Bids, Each Bid shall be accompanied by a certified check or cashier's check payable to the City of Moreno Valley, or Bidder's Bond executed by the Bidder as principal and a California-admitted surety insurer (as defined by California Code of Civil Procedure §§ 995.120 and 995.311) in an amount of not less than **ten percent (10%)** of the amount of the Total Bid price ("Bid Security"). Pursuant to California Public Contract Code Section 20170 & 20171, no Bid shall be considered unless such Bid Security is enclosed therewith. **If the Bidder elects to furnish a Bidder's Bond as his or her Bid security, the Bidder shall scan and upload the Bid Bond, and submit via the electronic vendor portal prior to the Bid Deadline.** A notary certificate for the Bidder's signature shall be attached. The attorney-in-fact for a corporate surety must sign the bond, such signature shall be notarized, and a certified and notarized Power of Attorney duly authorizing the attorney-in-fact to act for the surety shall be submitted with the bond. The bond shall include the address at which the principal (Bidder) and surety may be served with notices, papers and other documents. If any of these items are not submitted with the Bid, the Bid shall be considered non-responsive and will be rejected. City requires the apparent three (3) low Bidders to submit wet signature originals Bidder's Bonds within 72 hours of City's request as a further condition to determining if a Bid is responsive.

The bidder may utilize a cashier's or certified check in lieu of a bid bond in the amount of ten percent (10%) of the base bid. If a cashier's or certified check is used, it shall be delivered to the Capital Projects Division in a sealed envelope at 14177 Frederick Street, Moreno Valley, CA 92553 prior to the Bid Deadline specified herein.

In the event that the successful Bidder withdraws its Bid prior to the expiration of **ninety (90) Calendar Days** after the Bid Deadline, or attempts to withdraw its Bid when the requirements of Public Contract Code § 5100 *et seq.* are not met, or refuses or fails to execute the Contract and provide the required bonds and insurance within **ten (10) Working Days** after award of the Contract, the Bid Security shall be retained by the City. In such event, the City may award the Contract for the Work to a responsible Bidder submitting the next lowest responsive Bid or may call for new Bids at the City's sole discretion. Pursuant to Public Contract Code Section 20174, if the Contract is awarded to the next lowest responsible Bidder, the defaulted Bidder's Bid Security shall be used to cover the difference between the lowest Bid Price and the second lowest Bid Price, and any surplus will be returned to the defaulted Bidder or surety.

12. **Contractor's Statement**: Each Bidder shall scan and upload with its Bid, a Contractor's Statement (which is included within the Bidder's Proposal forms) completed by Bidder. The Contractor's Statements shall not be public records. All information required by the Contractor's Statement shall be completely and fully provided. Any Bid not accompanied by a Contractor's Statement completed with all information required and bearing the signature of the Bidder's duly authorized representative under penalty of perjury may render the Bid non-responsive and

rejected. If the City determines that any information provided by a Bidder in the Contractor's Statement is false or misleading, or is so incomplete as to be false or misleading, the City may reject the Bid submitted by such Bidder as being non-responsive. Although the City will be reviewing qualifications, the City shall not apply a relative superiority analysis in making award of the Contract to the lowest responsive responsible Bidder.

13. **Subcontractors**:

13.1. **Subcontractor List.** Each Bidder shall submit as part of the Bid, through PlanetBids in the electronic format provided, a list of proposed Subcontractors in accordance with the Subletting and Subcontracting Fair Practices Act, Public Contract Code Section 4100 *et seq*. If additive Alternate Bid Items are included in the Contract Documents, Bidder shall identify Subcontractors performing additive Alternate Bid Items when such Work or combination of base Contract Work and Alternate Work exceeds one-half of one percent of the total Bid Price. The City may require the three (3) lowest Bidders to submit other information pertinent to the proposed Subcontractor's quality, fitness, capacity and experience to satisfactorily perform the Work. Failure to timely submit such additional Subcontractor information may result in the Bid being deemed non-responsive and the Bid will be rejected by the City.

13.2. **Work of Subcontractors.** The organization or arrangements of the Specifications and Plans shall not limit the extent of the Work of the Contract Documents. Accordingly, all Bidders are encouraged to disseminate all of the Specifications, Drawings and other Contract Documents to all persons or entities submitting sub-bids to the Bidder. The omission of any portion or item of Work from the Bid or from sub-bids that is reasonably inferable from the Contract Documents is not a basis for adjustment of the Contract Price or the Contract Time.

13.3. **Bidder-Performed Work.** After the Bid Deadline, the City may require the three (3) lowest Bidders to submit information about Bidder-performed Work including, but not limited to, the dollar value or percentage value of Work to be performed by Bidder in conformity with the Contract Documents. **See Section 3-2 of the Standard Specifications and City Special Provisions regarding requirements for Contractor-performed Work.**

13.4. **Ineligible Subcontractors.** The successful Bidder is prohibited from performing Work on the Project with any Subcontractor who is ineligible to perform work on a public works project pursuant to Sections 1725.5, 1777.1 or 1777.7 of the California Labor Code. By submitting a Bid, each Bidder certifies that it has investigated the eligibility of each and every listed Subcontractor and has determined that none is ineligible to perform Work pursuant to the Labor Code.

14. **Non-Collusion Declaration**: By submitting a Bid, the Contractor agrees to and acknowledges the Non-Collusion Declaration as contained in the Contract Documents in accordance with California Public Contract Code Section 7106, shall be signed under penalty of perjury, certifying that the Bid is not the result of and has not been influenced by collusion**.** The US Department of Transportation ("DOT") provides a toll-free hotline to report bid rigging activities. Use the hotline to report bid rigging, bidder collusion, and other fraudulent activities. The hotline number is (800) 424-9071. The service is available 24 hours 7 days a week and is confidential and anonymous. The hotline is part of the DOT's effort to identify and investigate highway construction contract fraud and abuse and is operated under the direction of the DOT Inspector General.

15. **Disqualification of Bidders**:

15.1. **Debarred Contractors.** No Bid will be accepted from a Bidder who is prohibited from performing work on a public works project pursuant to Sections 1777.1 or 1777.7 of the California Labor Code.

15.2. **Interest in More Than One Bid.** More than one Bid from an individual, firm, partnership, corporation, or an association under the same or different name will not be considered; however, a person, firm or corporation that has submitted a sub-bid to a Bidder or that has quoted prices of materials to a Bidder, is not thereby disqualified from submitting a sub-bid or quoting prices to other Bidders or making a Bid as the prime contractor. Reasonable grounds for believing that any Bidder has an interest in more than one Bid as a Bidder will cause the rejection of all Bids in which such Bidder is interested.

15.3. **Improperly Licensed.** No Bid will be accepted from a Bidder, at the Bid Deadline, who is not fully and properly licensed as a contractor in accordance with Chapter 9 of Division 3 of the California Business and Professions Code (Section 7000 et seq.). See the Notice Inviting Bids for identification of the license(s) required for this Project.

15.4.

16. **Evaluation of Bids**:

16.1. **Responsive Bid.** A responsive Bid is a Bid that conforms, in all material respects, to these Instructions to Bidders. Non-responsive Bids will be rejected.

16.2. **Responsible Bidder.** A responsible Bidder means a Bidder who has demonstrated the attributes of trustworthiness, quality, fitness, capacity, and experience to satisfactorily perform fully the requirements of the Contract Documents and the moral and business integrity and reliability that will assure good faith performance in the sole discretion of the City. The City's determination of a Bidder's responsibility or non-responsibility shall be based on the fitness and capacity of the Bidder to satisfactorily perform the obligations of the Contract, whether or not the Bidder is qualified to perform those obligations, whether or not the Bidder is trustworthy, and such other bases as may be relevant. The City may consider, among other things: (1) any act or omission or pattern or practice of acts or omissions that negatively reflect on the Bidder's quality, fitness or capacity to perform; (2) any act or omission of Bidder that indicates a lack of integrity or honesty; (3) the making of a false claim against the City or any other public entity or engaging in collusion; (4) the Bidder's financial capability to perform; (5) the Bidder's experience with its sureties and insurance companies; (6) the Bidder's ability to perform on time and on budget, either in the present or as performed in the past; (7) whether or not Bidder has performed satisfactorily in the past on its contracts with the City or any other public entity, including, but not limited to, whether or not Bidder has been in default under a contract with the City or any other public entity; (8) the Bidder's safety record; (9) the Bidder's history of claims, litigation, and termination or disqualification on public projects; (10) Bidder's contract management skills, including, but not limited to, the use of scheduling tools, submission of schedules, compliance with prevailing wage rates, and certification of accurate payroll documents; and (11) whether or not Bidder is currently or was previously debarred by any public agency.

17. **Reservation of Rights**: The City reserves the right, in its sole discretion, to: judge the Bidder's representations as stated in the Bid forms, including the Contractor's Statement, and any

post-Bid information to determine whether or not Bidder is qualified to perform the Work; be the sole judge regarding the suitability of the products, services or supplies offered; to not purchase all items or the full quantity of each item listed in the Contract documents; reject any or all Bids; modify, cancel or withdraw the Notice Inviting Bids; issue a new Notice Inviting Bids; suspend or abandon the Project; appoint evaluation committees to review bids; and seek the assistance of outside technical experts in Bid evaluation; waive deficiencies, informalities and minor irregularities in any Bid or in the bidding process; require a Bidder to provide a guarantee (or guarantees) of the Contract by a third party; not issue a Notice to Proceed after execution of the Contract. In submitting a Bid in response to the Notice Inviting Bids, the Bidder is specifically acknowledging the City holds these rights. The Notice Inviting Bids does not commit the City to enter into a Contract, to reject, in its sole discretion, all Bids, nor does it obligate the City to pay for any costs incurred in preparation and submission of a Bid or in anticipation of a contract. By submitting a Bid, the Bidder disclaims any right to be paid for such costs.

18. **Rejection of Bidder's Proposals**: Any Bid containing information which is subsequently proven false or improperly signed shall be considered non-responsive and shall be rejected by the City. A Bid **shall** be rejected as non-responsive:

A. If the Bid shows any alterations of form or material additions not called for.

B. If the Bid contains additional or Alternate Bid Items not called for.

C. If the Bidder adds any provisions reserving its rights to accept or reject any award of Contract.

D. If the Bidder's Bond/Security does not accompany the Bid.

E. If the Bid fails to provide required information except as allowed by law.

F. If the Bid fails to indicate that Work valued at least fifty percent (50%) of Contract Price (except Specialty Items) will be performed by the Bidder's own forces, in accordance with Section **5-1.13A** of the City Special Provisions.

G. If the Bid is transferred to another Bidder.

H. If the Bid is received after the designated Bid Deadline.

I. If the Bid does not contain a properly signed Declaration of Noncollusion.

J. If the Bidder has been debarred pursuant to California Labor Code Sections 1777.1 or 1777.7 (see Paragraph **15.1** above).

A Bid **may** be rejected as non-responsive if it contains irregularities of any kind; however, the City reserves the right to waive irregularities to the extent permitted by law, as well as to reject any and all Bids. Bids may be considered irregular and may be rejected for reasons that include, but are not limited to, the following:

A. If there are material qualifications, conditions, or irregularities of any kind which may make the Bid incomplete, indefinite, or ambiguous.

B. If the Bid Price or unit prices provided by Bidder are obviously unbalanced or are excessive or may materially affect the final cost of the Work.

C. If Bidder has been delinquent or unfaithful in the performance of any former contract with the City.

D. If the City determines that any information provided by a Bidder is false or misleading, or is so incomplete as to be false or misleading.

19. **Award of Contract**: The lowest responsible Bidder will be determined by comparing the total Bid Price of all Base Bid Items plus all Additive Alternate Bid Items. The City reserves the right to select any, all, or none of the Alternate Bid Items at the time of award of the Contract. In the event that any or all of the Alternate Bid Items are not awarded as part of the Contract, the City reserves the right to add any or all of the Alternate Bid Items by Change Order or Construction Change Directive at the prices set forth in the Bid.

The award of the Contract, if made, will be within **ninety (90) Calendar Days** after the Bid Deadline, unless a Bidder and, if applicable, its Bidder's Bond surety, agree to extend the period of Bid irrevocability.

20. **Execution of Contract**: The Agreement shall be signed by the successful Bidder in duplicate counterpart and returned, together with the CWA Letter(s) of Assent (if applicable), required bonds and insurance certificate(s), within **ten (10) Working Days after the date the Agreement** is awarded to the successful Bidder by the City. The Contract shall not be binding upon the City until same has been completely executed by the Contractor and the City.

21. **Bonds and Insurance**: The successful Bidder shall furnish a Performance Bond and a Labor and Materials Payment Bond, each in the penal amount of 100% of the Contract Price. Bond forms for execution will be provided by the City when the Contract is tendered to the successful Bidder. Bonds may be secured through the Bidder's usual sources. The cost of furnishing the bonds shall be included in the Bid. Bonds issued by a California-admitted surety insurer listed on Treasury Circular 570 shall be deemed accepted unless specifically rejected by the City. Bonds issued by sureties not listed in Treasury Circular 570 must be accompanied by all documents enumerated in California Code of Civil Procedure Section 995.660. The bonds are subject to the requirements of **Paragraph 8** of the Agreement**.** The Bidder selected for award of the Contract will be required to furnish the City with a certificate of liability insurance coverage, an insurance endorsement, and workers' compensation certification in the coverage amounts specified in **Paragraph 7** of the Agreement. The successful Bidder shall deliver the signed Agreement, bonds, and insurance to the City within **Seven (7) Working Days** after the Contract is awarded to the successful Bidder.

22. **Permits and Fees**: Refer to Section **5-1.20B** of the Standard Specifications and City Special Provisions.

23. **Bid Protests.** Bid protests will follow the City of Moreno Valley Municipal Code Section 3.12.070.

24. **Disadvantaged Business Enterprise ("DBE") Participation**: This solicitation and resultant Contract is not financed in whole or part with federal funds, however, the City encourages Bidders to follow Title 49, Code of Federal Regulations, Part 26 (49 CFR 26) entitled

"Participation by Disadvantaged Business Enterprises in Department of Transportation Financial Assistance Programs." Bidders who obtain DBE participation on this Contract will assist the City in meeting its DBE goals for the Project. DBE groups are Black Americans, Hispanic Americans, Native Americans, Asian Pacific Americans, Subcontinent Asian Americans, Women, or other groups designated as socially and economically disadvantaged by the U.S. Small Business Administration (SBA). Individuals who do not fall within the six presumptive groups are encouraged to Visit Appendix E to Part 26 for SBA regulations concerning social & economic disadvantage determinations.

In accordance with 49 CFR 26.13(b), the Contract and each subcontract the Contractor signs with a Subcontractor must contain the following assurance:

DBEs and other small businesses are strongly encouraged to participate in the performance of this Contract. The Contractor is encouraged to make work available to DBEs and select work parts consistent with the available DBEs, including subcontractors, suppliers, service providers, and truckers. The Bidder also is encouraged to meet the DBE goal shown on the Notice to Bidders.

The City has established a goal for DBE participation on this Project in the Notice Inviting Bids. The City may adjust this percentage as more specific information becomes available.

25. **DBE Commitment Submittal**: Submit DBE information on the Caltrans **Exhibit 15-G** Construction Contract DBE Commitment form included in the Bidding Documents. The apparent low Bidder, second low Bidder, and third low Bidder are encouraged to complete and submit the Construction Contract DBE Commitment form to the City **no later than 4:00 p.m. on the 4th Working Day after the Bid Opening.** Other Bidders do not need to submit the Construction Contract DBE Commitment form unless the City requests it. If the City requests you to submit a Construction Contract DBE Commitment form, submit the completed form within **4 Working Days** of the request. Submit a copy of the quote from each DBE shown on the DEB Commitment form that describes the type and dollar amount of work shown on the form. Submit a DBE Confirmation form for each DBE shown on the Construction Contract DBE Commitment form to establish that it will be participating in the Contract in the type and dollar amount of work shown on the form. If a DBE is participating as a joint venture partner, submit a copy of the joint venture agreement.

--- END OF INSTRUCTIONS TO BIDDERS ---

BIDDER'S PROPOSAL
PROJECT NO. 801 0021
SR-60/MORENO BEACH DRIVE INTERCHANGE IMPROVEMENTS (PHASE 2)

(Submit with Electronic Bid)

1. CERTIFICATION OF INSPECTION OF THE SITE AND CONTRACT DOCUMENTS. By submitting an electronic bid, Bidder certifies that it: has carefully examined the location of the proposed Work, is fully familiar with all Contract Documents, including the City Special Provisions, Plans, and Addenda, Plans, and that said Contract Documents contain sufficient detail regarding the Work to be performed; has notified City of any errors or omissions in the Contract Documents and unusual site conditions; has carefully checked all words, prices, and statements in this Bidder's Proposal; and has visited the Project site and conducted such other field investigations which are prudent and reasonable in preparing the Bid. Bidder agrees that neither the City of Moreno Valley, nor the Moreno Valley Housing Authority, nor the Moreno Valley Community Services District, nor the Western Riverside Council of Governments, nor the Riverside County Flood Control and Water Conservation District, nor Caltrans, nor any officer or employee therefore will be responsible for any misunderstandings, errors or omissions on the part of the undersigned in submitting this Bid.

2. BIDDER'S REPRESENTATIONS REGARDING INSURANCE AND BONDS. This Bid is made with the full knowledge of the kind, quantity, and quality of the materials and Work required and, if it is accepted by the City, the Bidder shall enter into a Contract and furnish the bonds, insurance, and other documents as required by the Contract Documents within ten (10) Working Days after award of the Contract. The Bidder agrees that failure to execute and return the Agreement, the CWA Letter(s) of Assent (if applicable) or the required faithful performance bond, labor and materials payment bond, and insurance certificates to the City within said ten (10) Working Days shall be sufficient cause for the rescission of the award and forfeiture of the Bid Security.

3. TIME FOR COMPLETION. The Bidder agrees that if awarded the Contract, it shall complete all preconstruction requirements, and construction of the Project within the Contract Time established in **Paragraph 5** of the Agreement and within the duration(s) established to Fulfill Preconstruction Requirements.

4. NON-COLLUSION DECLARATION TO BE EXECUTED BY BIDDER AND SUBMITTED WITH BID. The undersigned declares: I am the _____ [insert title] of the party who submits herewith a Bid to the City. The Bid is not made in the interest of, or on behalf of, any undisclosed person, partnership, company, association, organization, or corporation. The Bid is genuine and not collusive or sham. The Bidder has not directly or indirectly induced or solicited any other Bidder to put in a false or sham Bid. The Bidder has not directly or indirectly colluded, conspired, connived, or agreed with any Bidder or anyone else to put in a sham Bid, or to refrain from bidding. The Bidder has not in any manner, directly or indirectly, sought by agreement, communication, or conference with anyone to fix the Bid price of the Bidder or any other Bidder, or to fix any overhead, profit, or cost element of the Bid price, or of that of any other Bidder., All statements contained in the Bid are true. The Bidder has not, directly or indirectly, submitted his or her Bid Price or any breakdown thereof, or the contents thereof, or divulged information or data relative thereto to any corporation, partnership, company associations, organization, bid depository, or to any member or agent thereof to effectuate a collusive or sham Bid and has not paid, and will not pay, any person or entity for such purpose. Any person executing this declaration on behalf of a

Bidder that is a corporation, partnership, joint venture, limited liability company, limited liability partnership, or any other entity, hereby represents that he or she has full power to execute, and does execute, this declaration on behalf of the Bidder.

I declare under penalty of perjury under the laws of the State of California that the foregoing is true and correct and that this declaration is executed on:

_____ [date], at _____ [city], _____ [state]."

Signed: _____

Print Name: _____

Bidder acknowledges acceptance and agreement with the above by agreeing to the terms and conditions at the time of electronic bid submittal.

5. EQUAL EMPLOYMENT OPPORTUNITY CERTIFICATION.
Bidder hereby certifies that he/she/it ☐ has, ☐ has not., participated in a previous contract or subcontract subject to the equal opportunity clauses, as required by Executive Orders 10925, 11114, or 11246, and that, where required, he/she/it has filed with the Joint Reporting Committee, the Director of the Office of Federal Contract Compliance, a Federal Government contracting or administering agency, or the former President's Committee on Equal Employment Opportunity, all reports due under the filing requirements.

Notes:

- The above certification is required by the Equal Employment Opportunity Regulations of the Secretary of Labor (41 CFR 60-1.7(b)(1)), and must be submitted by bidders and proposed subcontractors only in connection with contracts and subcontracts that are subject to the equal opportunity clause. Contracts and subcontracts that are exempt from the equal opportunity clause are set forth in 41 CFR 60-1.5. (Generally, only contracts or subcontracts of $10,000 or under are exempt.)
- Currently, Standard Form 100 (EEO-1) is the only report required by the Executive Order or their implementing regulations.
- Prime Contractors and subcontractors who have participated in a previous contract or subcontract subject to the Executive Orders and have not filed the required reports should note 41 CFR 60-1.7(b)(1) prevents the award of contracts and subcontracts unless the Contractor submits a report covering the delinquent period or such other period specified by the Federal Highway Administration or by the Director, Office of Federal Contract Compliance, U.S. Department of Labor.

6. TITLE 49, CODE OF FEDERAL REGULATIONS, PART 29, DEBARMENT AND SUSPENSION CERTIFICATION. Bidder, under penalty of perjury, certifies that, except as noted below, he/she/it or any other person associated therewith in the capacity of owner, partner, director, officer, or manager:

- is not currently under suspension, debarment, voluntary exclusion, or determination of ineligibility by any Federal agency;
- has not been suspended, debarred, voluntarily excluded, or determined ineligible by any

Federal agency within the past 3 years;
- does not have a proposed debarment pending; and
- has not been indicted, convicted, or had a civil judgment rendered against it by a court of competent jurisdiction in any matter involving fraud or official misconduct within the past 3 years.

If there are any exceptions to this certification, insert the exceptions in the following space:

_____

Exceptions will not necessarily result in denial of award, but will be considered in determining Bidder responsibility. For any exception noted above, indicate to whom it applies, initiating agency, and dates of action.

Notes: Providing false information may result in criminal prosecution or administrative sanctions.

The above certification is part of the Bidder's Proposal. Signing this Bidder's Proposal on the signature portion thereof shall also constitute signature of this certification

7. SIGNATURE AND SIGNATURE AUTHORIZATION. The undersigned certifies that he/she/they is/are authorized to sign this Bid and any subsequent Contract on behalf of the Bidder. Bids without valid required signature(s) will be considered non-responsive. Signature(s) must be accompanied by a completed notary certificate of acknowledgement attached hereto. Note the description of the document on the notary certificate. A general partner must sign on behalf of a partnership. **Two (2)** corporate officers must sign on behalf of a corporation unless the corporation has a corporate resolution that allows one person to sign on behalf of the corporation; if applicable, said resolution must be attached hereto. The corporate seal may be affixed hereto.

Company/Contractor Legal Name	Federal Tax ID Number
Signature	Signature
Name (print/type)	Name (print/type)
Title (print/type)	Title (print/type)
Phone Number and Fax Number	E-Mail Address
Date	

CALIFORNIA ALL-PURPOSE CERTIFICATE OF ACKNOWLEDGMENT

SAMPLE

State of California

County of _____
On_____ before me, _____,
(Here insert name and title of the officer)
Personally appeared_____,

who proved to me on the basis of satisfactory evidence to be the person(s) whose name(s) is/are subscribed to the within instrument and acknowledgement to me that he/she they executed the same in his/her/their authorized capacity(ies), and that by his/her/their signature(s) on the instrument the person(s), or the entity upon behalf of which the person(s) acted, executed the instrument.

I certify under PENALTY OF PERJURY under the laws of the State of California that the foregoing paragraph is true and correct.

WITNESS my hand and official seal.

_____ (Notary Seal)
Signature of Notary Public

ADDITIONAL OPTIONAL INFORMATION

DESCRIPTION OF THE ATTACHED DOCUMENT

BIDDER'S PROPOSAL
(Title or description of attached document)

_____
(Title or description of attached document continued)

Number of Pages _____

Document Date _____

_____
Additional Information

CAPACITY CLAIMED BY THE SIGNER

☐ Individual(s)
☐ Corporate Officer

_____
(Title)

☐ Partner (s)
☐ Attorney-in-Fact
☐ Other _____

INSTRUCTIONS FOR COMPLETING THIS FORM

Any acknowledgment completed in California must contain verbiage exactly as appears above in the notary section or a separate acknowledgment form must be property completed and attached to that document. The only exception is if a document is recorded outside of California. In such instances, any alternative acknowledgment verbiage as may be printed on such a document so long as the verbiage does not require the notary to do something that is illegal for a notary in California (i.e. certifying the authorized capacity of the signer). Please check the document carefully for proper notarial wording and attach this form if required.

- State and County information must be the State and County where the document signer(s) personally appeared before the notary public for acknowledgment.
- Date of notarization must be the date that the signer(s) personally appeared which must also be the same date the acknowledgment is completed.
- The notary public must print his or her name as it appears within his or her commission followed by a comma and then your title (notary public).
- Print the name(s) of document signer(s) who personally appear at the time of notarization.
- Indicate the correct singular or plural forms by crossing off incorrect forms (i.e. ~~he~~/she/~~they~~, is/~~are~~) or circling the correct forms. Failure to correctly indicate this information may lead to rejection of document recording.
- The notary seal impression must be clear and photographically reproducible. Impression must not cover text or lines. If seal impression smudges, re-seal if a sufficient area permits, otherwise complete a different acknowledgment form.
- Signature of the notary public must match the signature on file with the office of the county clerk.
- Additional information is not required but could help to ensure this acknowledgment is not misused or attached to a different document.
- Indicate title or type of attached document, number of pages and date.
- Indicate the capacity claimed by the signer. If the claimed capacity is a corporate officer, indicate the title (i.e. CEO, CFO, Secretary).
- Securely attach this document to the signed document.

BID SCHEDULE NOTICE

PROJECT NO. 801 0021
SR-60/MORENO BEACH DRIVE INTERCHANGE IMPROVEMENTS (PHASE 2)

Registered Bidders shall utilize the electronic Bid Schedule on the City of Moreno Valley Bid Portal with PlanetBids to enter Bid Item prices, Subcontractor List information, to acknowledge receipt of Addenda, if any, and to upload scanned copies of other required Bid Forms for submittal.

The link to register to become a Registered Bidder and electronically bid on this Project can be found at the following address:

http://www.planetbids.com/portal/portal.cfm?CompanyID=24660

BOND NO. _____

BIDDER'S BOND

PROJECT NO. 801 0021
SR-60/MORENO BEACH DRIVE INTERCHANGE IMPROVEMENTS (PHASE 2)

KNOW ALL MEN OR WOMEN BY THESE PRESENTS:

That _____, as Principal, hereinafter referred to as "Contractor," and _____, a duly authorized admitted surety insurer as Surety, are held and firmly bound unto the City of Moreno Valley in the penal sum of TEN PERCENT (10%) OF THE TOTAL AMOUNT OF THE BID (Total Base Bid Price plus all Alternate Additive Bid Prices, if any) of the Contractor above named, submitted by said Contractor to the City of Moreno Valley for the Work for said Project entitled above, for the payment of which sum in lawful money of the United States, well and truly to be made, to the City of Moreno Valley to which said Bid was submitted, we bind ourselves, our heirs, executors, administrators and successors, jointly and severally liable (CCP 995.320 (a)(1), PCC 20171), firmly by these presents. In no case shall the liability of the Surety hereunder exceed the amount of:

_____.

THE CONDITION OF THIS OBLIGATION IS SUCH:

That whereas the Contractor has submitted the above-mentioned Bid to the City of Moreno Valley as aforesaid for the Work for said Project entitled above.

NOW, THEREFORE, if the aforesaid Contractor is awarded the Contract and, within the time and manner required under the Contract Documents, after the prescribed forms are presented to him or her for signature, enters into a written Agreement in the prescribed form and in accordance with the Contract Documents, and files two bonds with the City of Moreno Valley, one to guarantee Faithful Performance and the other to guarantee payment for labor and materials, in accordance with said Contract Documents, and as required by law, and files the required insurance certificate(s) in accordance with said Contract Documents, then this obligation shall be null and void; otherwise, it shall be and remain in full force and effect until execution of the Agreement or forfeiture pursuant to the Provisions of Sections 20172 and 20174 of the Public Contract Code. The Surety hereby waives notice of an agreement between the City and Contractor to extend the time in which the City may accept the Bid.

In the event suit is brought upon this bond by the City and judgment is recovered, the Surety shall pay all costs incurred by the City in such suit, including a reasonable attorney fee to be fixed by the court.

(SIGNATURE PAGE FOLLOWS)

IN WITNESS WHEREOF, we have hereunto set our hands on this ____ day of

_____, 20___.

BIDDER (Principal)	CORPORATE SURETY
Name: _____	Company Name: _____
Address: _____	Address: _____
_____	_____
Telephone No.: _____	Telephone No.: _____
Print Name: _____	Print Name: _____
Title: _____	
Signature: _____	Signature: _____ (Attorney-In-Fact)
Date: _____	Date: _____

SIGNING INSTRUCTIONS

- **The bond shall be executed by a California admitted surety insurer (CCP 995.311).**
- **The bond shall include an attached Notary Certificate for the Attorney-in-Fact for the Surety.**
- **The bond shall include an attached original Power of Attorney only authorizing the Attorney-in-Fact to act for the Surety.**
- **The bond shall include the address at which the Principal (Bidder) and Surety may be served with notices, papers and other documents.**
- **The Surety's corporate seal may be affixed hereto (optional).**

If any of the above mandatory items are omitted, the Bid will be considered non-responsive and will be rejected.

CALIFORNIA ALL-PURPOSE CERTIFICATE OF ACKNOWLEDGMENT

SAMPLE

State of California

County of _____

On _____ before me, _____,
(Here insert name and title of the officer)

personally appeared _____,

who proved to me on the basis of satisfactory evidence to be the person(s) whose name(s) is/are subscribed to the within instrument and acknowledgement to me that he/she they executed the same in his/her/their authorized capacity(ies), and that by his/her/their signature(s) on the instrument the person(s), or the entity upon behalf of which the person(s) acted, executed the instrument.

I certify under PENALTY OF PERJURY under the laws of the State of California that the foregoing paragraph is true and correct.

WITNESS my hand and official seal.

_____ (Notary Seal)
Signature of Notary Public

ADDITIONAL OPTIONAL INFORMATION

DESCRIPTION OF THE ATTACHED DOCUMENT

BIDDER'S BOND SIGNATURE PAGE
(Title or description of attached document)

_____
(Title or description of attached document continued)

Number of Pages _____

Document Date _____

_____
Additional Information

CAPACITY CLAIMED BY THE SIGNER

- ☐ Individual(s)
- ☐ Corporate Officer

_____
(Title)

- ☐ Partner (s)
- ☐ Attorney-in-Fact
- ☐ Other _____

INSTRUCTIONS FOR COMPLETING THIS FORM

Any acknowledgment completed in California must contain verbiage exactly appears above in the notary section or a separate acknowledgment form must property completed and attached to that document. The only exception is if a document is recorded outside of California. In such instances, any alternative acknowledgment verbiage as may be printed on such a document so long as the verbiage does not require the notary to do something that is illegal for a notary in California (i.e. certifying the authorized capacity of the signer). Please check the document carefully for proper notarial wording and attach this form if required.

- State and County information must be the State and County where the document signer(s) personally appeared before the notary public for acknowledgment.
- Date of notarization must be the date that the signer(s) personally appeared which must also be the same date the acknowledgment is completed.
- The notary public must print his or her name as it appears within his or her commission followed by a comma and then your title (notary public).
- Print the name(s) of document signer(s) who personally appear at the time of notarization.
- Indicate the correct singular or plural forms by crossing off incorrect forms (i.e. ~~he~~/she/~~they~~, is/~~are~~) or circling the correct forms. Failure to correctly indicate this information may lead to rejection of document recording.
- The notary seal impression must be clear and photographically reproducible. Impression must not cover text or lines. If seal impression smudges, re-seal if a sufficient area permits, otherwise complete a different acknowledgment form.
- Signature of the notary public must match the signature on file with the office of the county clerk.
- Additional information is not required but could help to ensure this acknowledgment is not misused or attached to a different document.
- Indicate title or type of attached document, number of pages and date.
- Indicate the capacity claimed by the signer. If the claimed capacity is a corporate officer, indicate the title (i.e. CEO, CFO, Secretary).
- Securely attach this document to the signed document.

CONTRACTOR'S STATEMENT

(Submit with Electronic Bid)

PROJECT NO. 801 0021
SR-60/MORENO BEACH DRIVE INTERCHANGE IMPROVEMENTS (PHASE 2)

NAME OF BIDDER: _____

GENERAL
To be considered, all information requested must be submitted on this Contractor's Statement form or on sheets which clearly identify the paragraph number and subparts being responded to. Additionally, to the extent this form does not provide sufficient space to fully respond, contractors should attach additional sheets as necessary referencing the appropriate paragraph number and subparagraph. The Contractor's Statement shall not be a public record.

All questions must be answered and the data must be clear and complete. Line items that do not require a response shall be noted with a "N/A" referencing items that are not applicable.

1. Contractor is able to obtain insurance for the Work with the minimum scope and limits specified in **Paragraph 7** of the Agreement.

   ☐ Yes ☐ No

2. Contractor has current workers' compensation insurance policy as required by the Labor Code or is legally self-insured pursuant to Labor Code Section 3700 *et seq.*

   ☐ Yes ☐ No

   ☐ Contractor is exempt from this requirement, because it has no employees

3. Have you been in business for a minimum of **three (3) years** under the contractor license used for the Bid you are submitting?

   ☐ Yes ☐ No

4. Have you satisfactorily completed: **1)** at least **one (1)** prevailing wage public contract in California; **and 2)** at least **one (1)** contract comparable in scope and scale to the Project for which the Bid is submitted, completed within **five (5)** years prior to the Bid Deadline and with the dollar value of Bidder's portion of each such project in excess of the Base Bid plus all Additive Alternate Bid Prices submitted for this Project?

   ☐ Yes ☐ No

5. Has your contractor license been revoked at any time in the last five years?

   ☐ Yes ☐ No

6. Has a surety firm completed a contract on your behalf, or paid for completion because your firm was default terminated by the project owner within the last five (5) years?

   ☐ Yes ☐ No

7. Complete the following information for each project for which a bonding company has had to complete any part of your work during the last five (5) years. (Attach additional sheets as necessary.)

   (a) Project: _____
   (b) Amount Bonded: _____
   (c) Bonding Company: _____
   (d) Percent of Project Completed: _____
   (e) Name of Contractor Completing Project: _____

8. At the time of submitting this form, is your firm ineligible to bid on or be awarded a public works contract, or perform as a subcontractor on a public works contract, pursuant to Labor Code section 1777.1, Labor Code Section 1777.7?

   ☐ Yes ☐ No

   If the answer is "Yes," state the beginning and ending dates of the period of debarment:

   _____

9. At the time of submitting this form, is your firm debarred or otherwise ineligible to bid on or be awarded contracts from the City of Moreno Valley, the federal government, or any other public agencies in California?

   ☐ Yes ☐ No

   If the answer is "Yes," state the beginning and ending dates of the period of debarment:

   _____

10. At any time during the last five years, has your firm, or any of its owners or officers, been convicted of a crime involving the awarding of a contract of a government construction project, or the bidding or performance of a government contract, antitrust statutes, racketeering statutes, safety and health regulations, environmental laws, laws banning workplace discrimination, laws governing wages, hours or labor standards, or laws involving fraud, theft, or any other act of dishonesty?

    ☐ Yes ☐ No

11. Has your firm, or any of its owners or officers, been issued, within a two (2) year period, three (3) final administrative or criminal citations for violations of the City of Moreno Valley Municipal Code?

    ☐ Yes ☐ No

12. Is your firm currently the debtor in a bankruptcy case?

    ☐ Yes ☐ No
    (If yes, attach a copy of the bankruptcy petition showing the case number and date on which the petition was filed.)

13. Does your firm, any of its officers, supervisors, managers, currently have any delinquent liability to an employee, the state, or any awarding body for any assessment of back wages or related damages, interest, fines or penalties pursuant to any final judgment, order, or determination by any court or any federal, state, or local administrative agency, including a confirmed arbitration award?

☐ Yes ☐ No

14. Have you reviewed the CWA and will you be able to comply with its terms?

☐ Yes ☐ No

15. How many years has your organization been in business? _____

16. What year was your organization established? _____

17. How many years has your organization been in business under its present business name?

_____

18. Under what other or former names has your organization operated?

_____
_____
_____

19. Identify parent company if applicable: _____

20. Have you ever been licensed under a different name or different license number?

☐ Yes ☐ No

If the answer is yes, give name and license number:

_____
_____
_____
_____

21. Complete the following information for Bidder's __ most recently **completed** construction contracts with public agencies within the last __ years, including, but not limited to contracts with the City of Moreno Valley. (List three projects maximum. Attach additional sheets as necessary.) **Only list projects your firm performed as a general contractor.**

Project #1

(a) Name of Agency's Project Manager: _____
(b) Name of Project: _____
(c) Name of Agency: _____
(d) Project Address: _____

City: _____ State: _____ Zip: _____

(e) Agency's Contact Phone: (___) _____ E-mail: _____
(f) Architect/Engineer Contact Phone: (___) _____ E-mail: _____
(g) Construction Manager Contact Phone: (___) _____ E-mail: _____
(h) Inspector of Record Contact Phone: (___) _____ E-mail: _____
(i) Type of Facility: _____
(j) Contract Type: _____
(k) Original Contract Amount: _____
(l) Total Contract Price (including Change Orders): _____
(m) Percent Complete: _____
(n) Percent Work Performed With Own Forces: _____
(o) Date Construction Commenced: _____
(p) Original Scheduled Completion Date: _____
(q) Adjusted Completion Date Based on Time Extensions Granted by Owner: _____
(r) Actual Completion Date: _____
(s) Explain any differences between scheduled and actual completion dates: _____

(t) Explain any differences between the original contract price and the actual cost to complete:

Project #2

(a) Name of Agency's Project Manager: _____
(b) Name of Project: _____
(c) Name of Agency: _____
(d) Project Address: _____

City: _____ State: _____ Zip: _____

(e) Agency's Contact Phone: (___) _____ E-mail: _____
(f) Architect/Engineer Contact Phone: (___) _____ E-mail: _____
(g) Construction Manager Contact Phone: (___) _____ E-mail: _____
(h) Inspector of Record Contact Phone: (___) _____ E-mail: _____
(i) Type of Facility: _____
(j) Contract Type: _____
(k) Original Contract Amount: _____
(l) Total Contract Price (including Change Orders): _____
(m) Percent Complete: _____
(n) Percent Work Performed With Own Forces: _____
(o) Date Construction Commenced: _____
(p) Original Scheduled Completion Date: _____
(q) Adjusted Completion Date Based on Time Extensions Granted by Owner: _____
(r) Actual Completion Date: _____

(s) Explain any differences between scheduled and actual completion dates:_____

_____

_____

(t) Explain any differences between the original contract price and the actual cost to complete:

_____

_____

_____

Project #3

(a) Name of Agency's Project Manager:_____
(b) Name of Project: _____
(c) Name of Agency: _____
(d) Project Address: _____

City: _____ State: _____ Zip: _____

(e) Agency's Contact Phone: (___) _____ E-mail: _____
(f) Architect/Engineer Contact Phone: (___) _____ E-mail: _____
(g) Construction Manager Contact Phone: (___) _____ E-mail: _____
(h) Inspector of Record Contact Phone: (___) _____ E-mail: _____
(i) Type of Facility: _____
(j) Contract Type: _____
(k) Original Contract Amount: _____
(l) Total Contract Price (including Change Orders): _____
(m) Percent Complete: _____
(n) Percent Work Performed With Own Forces:_____
(o) Date Construction Commenced:_____
(p) Original Scheduled Completion Date: _____
(q) Adjusted Completion Date Based on Time Extensions Granted by Owner: _____
(r) Actual Completion Date: _____
(s) Explain any differences between scheduled and actual completion dates:_____

_____

_____

(t) Explain any differences between the original contract price and the actual cost to complete:

_____

_____

_____

22. List any projects in which your organization has been involved in any claim for delay, extra work or equitable contract adjustment in the last five years in which the amount in controversy exceeded $25,000. Identify claims by name of project, parties involved, description of claim and ultimate resolution (attach additional sheets as necessary):

(a) Name of project: _____
(b) Project Location: _____
(c) Date of Claim: _____

(d) Parties Involved: _____

_____

(e) Description of Claim: _____

_____

_____

(f) Result: _____

_____

_____

_____

23. Has your organization any of its principals, officers, supervisors, or managers ever been terminated from a project before completion including but not limited to termination based on any misconduct, such as failure to comply with contractual, statutory, or other legal obligations from any public construction project?

☐ Yes ☐ No

24. If yes, provide the following information: (List three projects maximum. Attach additional sheets as necessary.)

Project #1

(a) Name of project: _____
(b) Project Location: _____
(c) Client Name: _____
(d) Client Contact: _____
(e) Client Telephone No: _____
(f) Architect Name: _____
(g) Architect Telephone No: _____
(h) Date of Termination: _____
(i) Reason for Termination: _____

_____

_____

Project #2

(a) Name of project: _____
(b) Project Location: _____
(c) Client Name: _____
(d) Client Contact: _____
(e) Client Telephone No: _____
(f) Architect Name: _____
(g) Architect Telephone No: _____
(h) Date of Termination: _____
(i) Reason for Termination: _____

_____

_____

Project #3

(a) Name of project: _____
(b) Project Location: _____
(c) Client Name: _____
(d) Client Contact: _____
(e) Client Telephone No: _____
(f) Architect Name: _____
(g) Architect Telephone No: _____
(h) Date of Termination: _____
(i) Reason for Termination: _____
_____
_____

25. Certification

Contractor's Statements submitted by corporations must be signed with the legal name of the corporation, followed by the name of the state of incorporation and by the signature and designation of the chairman of the board, president or any vice president, and then followed by a second signature by the secretary, assistant secretary, the chief financial officer or assistant treasurer. All persons signing must be authorized to bind the corporation in the matter. The name of each person signing shall also be typed or printed below the signature. Satisfactory evidence of the authority of each officer signing on behalf of a corporation shall be furnished.

Contractor's Statements submitted by partnerships must furnish the full name of all partners and must be signed in the partnership name by a general partner with authority to bind the partnership in such matters, followed by the signature and designation of the person signing. The name of the person signing shall also be typed or printed below the signature.

Each person signing below makes the following representations under penalty of perjury:

The submitter of the foregoing answers has read the same and the matters stated therein are true to the best of his or her own personal knowledge. This information is provided for the purpose of qualifying to bid on the Project, and any individual, company or other agency named herein is hereby authorized to supply the awarding body with any information necessary to verify the prospective bidder's statements. By signing below, the submitter and the named contractor hereby grant permission to the City to contact any or all of the above listed persons or entities to confirm facts or otherwise investigate the above facts and issues.

The submitter understands that any statement which is proven to be false shall be grounds for immediate disqualification from bidding on the Project. The submitter whose signature appears below represents and warrants that he or she has authority to bind the named contractor.

I,_____ (Name), the undersigned, am the _____ (Title), with the authority to act for and on behalf of _____ (Contractor Entity Name), declare under penalty of perjury under the laws of the State of California that the foregoing information provided in this Pre-qualification Questionnaire is true, full, and correct.

I understand that making a false statement may result in disqualification from bidding on any public works project, registering as a Public Works Contractor with the Department of Industrial Relations, and may be grounds for termination of a public works contract.

Executed on this:_____ day of _____ at_____.
(Date) (Month / Year) (City / State)

Name of Contractor Representative: _____

Signature of Contractor Representative: _____

This form is requested and encouraged but not required for non-Federally funded projects.

City of Moreno Valley
Project No. 801 0021

Exhibit 12-B Bidder's List of Subcontractor (DBE and Non-DBE) Part 1

As of March 1, 2015 Contractors (and sub-contractors) wishing to bid on public works contracts shall be registered with the State Division of Industrial Relations and certified to bid on Public Works contracts. Please register at: https://www.dir.ca.gov/Public-Works/Contractor-Registration.html. The local agency will verify registration of all contractors and subcontractors on public works projects at bid and thereafter annually to assure that yearly registration is maintained throughout the life of the project.

In accordance with Title 49, Section 26.11 of the Code of Federal Regulations, and Section 4104 of the Public Contract Code of the State of California, as amended, the following information is required for each sub-contractor who will perform work amounting to more than one half of one percent (0.5%) of the Total Base Bid or $10,000 (whichever is greater). **Photocopy this form for additional firms.** Project Number: _____

Subcontractor Name and Location	Line Item & Description	Subcontract Amount	Percentage of Bid Item Sub-contracted	Contractor License Number / DIR Reg Number	DBE (Y/N)	DBE Cert Number	Annual Gross Receipts
Name: City, State:							☐ <$1 million ☐ <$5 million ☐ <$10 million ☐ <$15 million Age of Firm: ___ yrs.
Name: City, State:							☐ <$1 million ☐ <$5 million ☐ <$10 million ☐ <$15 million Age of Firm: ___ yrs.
Name: City, State:							☐ <$1 million ☐ <$5 million ☐ <$10 million ☐ <$15 million Age of Firm: ___ yrs.
Name: City, State:							☐ <$1 million ☐ <$5 million ☐ <$10 million ☐ <$15 million Age of Firm: ___ yrs.
Name: City, State:							☐ <$1 million ☐ <$5 million ☐ <$10 million ☐ <$15 million Age of Firm: ___ yrs.
Name: City, State:							☐ <$1 million ☐ <$5 million ☐ <$10 million ☐ <$15 million Age of Firm: ___ yrs.

Distribution: 1) Original-Local Agency File 2) Copy-DLAE w/ Award Package

This form is requested and encouraged but not required for non-Federally funded projects.

City of Moreno Valley
Project No. 801 0021

Exhibit 12-B Bidder's List of Subcontractor (DBE and Non-DBE) Part 2

In accordance with Title 49, Section 26 of the Code of Federal Regulations, the Bidder shall list all subcontractor who provided a quote or bid but **were not selected** to participate as a subcontractor on this project. **Photocopy this form for additional firms.** Project Number: _____

Subcontractor Name and Location	Line Item & Description	Subcontract Amount	Percentage of Bid Item Sub-contracted	Contractor License Number / DIR Reg Number	DBE (Y/N)	DBE Cert Number	Annual Gross Receipts
Name: City, State:							☐ <$1 million ☐ <$5 million ☐ <$10 million ☐ <$15 million Age of Firm: ___ yrs.
Name: City, State:							☐ <$1 million ☐ <$5 million ☐ <$10 million ☐ <$15 million Age of Firm: ___ yrs.
Name: City, State:							☐ <$1 million ☐ <$5 million ☐ <$10 million ☐ <$15 million Age of Firm: ___ yrs.
Name: City, State:							☐ <$1 million ☐ <$5 million ☐ <$10 million ☐ <$15 million Age of Firm: ___ yrs.
Name: City, State:							☐ <$1 million ☐ <$5 million ☐ <$10 million ☐ <$15 million Age of Firm: ___ yrs.
Name: City, State:							☐ <$1 million ☐ <$5 million ☐ <$10 million ☐ <$15 million Age of Firm: ___ yrs.

Distribution: 1) Original-Local Agency File 2) Copy-DLAE w/ Award Package

EXHIBIT 15-G CONSTRUCTION CONTRACT DBE COMMITMENT

This form is requested and encouraged but not required for non-Federally funded projects.

1. Local Agency: _____ 2. Contract DBE Goal: _____

3. Project Description: _____

4. Project Location: _____

5. Bidder's Name: _____ 6. Prime Certified DBE: ☐ 7. Bid Amount: _____

8. Total Dollar Amount for **ALL** Subcontractors: _____ 9. Total Number of **ALL** Subcontractors: _____

10. Bid Item Number	11. Description of Work, Service, or Materials Supplied	12. DBE Certification Number	13. DBE Contact Information (Must be certified on the date bids are opened)	14. DBE Dollar Amount

Local Agency to Complete this Section upon Execution of Award

21. Local Agency Contract Number: City of Moreno Valley

22. Project Number: _____

23. Bid Opening Date: _____

24. Contract Award Date: _____

25. Award Amount: _____

Local Agency certifies that all DBE certifications are valid and information on this form is complete and accurate.

26. Local Agency Representative's Signature _____ 27. Date _____

28. Local Agency Representative's Name _____ 29. Phone _____

30. Local Agency Representative's Title _____

15. TOTAL CLAIMED DBE PARTICIPATION	**$**
	%

IMPORTANT: Identify all DBE firms being claimed for credit, regardless of tier. Names of the First Tier DBE Subcontractors and their respective item(s) of work listed above must be consistent, where applicable with the names and items of the work in the "Subcontractor List" submitted with your bid. Written confirmation of each listed DBE is required.

16. Preparer's Signature _____ 17. Date _____

18. Preparer's Name _____ 19. Phone _____

20. Preparer's Title _____

DISTRIBUTION: 1. Original – Local Agency
2. Copy – Caltrans District Local Assistance Engineer (DLAE). Failure to submit to DLAE within 30 days of contract execution may result in de-obligation of federal funds on contract.
3. Include additional copy with award package.

ADA Notice: For individuals with sensory disabilities, this document is available in alternate formats. For information call (916) 654-6410 or TDD (916) 654-3880 or write Records and Forms Management, 1120 N Street, MS-89, Sacramento, CA 95814.

INSTRUCTIONS – CONSTRUCTION CONTRACT DBE COMMITMENT

This form is requested and encouraged but not required for non-Federally funded projects.

CONTRACTOR SECTION

1. Local Agency - Enter the name of the local agency that is administering the contract.
2. Contract DBE Goal - Enter the contract DBE goal percentage as it appears on the project advertisement.
3. Project Location - Enter the project location(s) as it appears on the project advertisement.
4. Project Description - Enter the project description as it appears on the project advertisement (Bridge Rehab, Seismic Rehab, Overlay, Widening, etc.).
5. Bidder's Name - Enter the contractor's firm name.
6. Prime Certified DBE - Check box if prime contractor is a certified DBE.
7. Bid Amount - Enter the total contract bid dollar amount for the prime contractor.
8. Total Dollar Amount for ALL Subcontractors – Enter the total dollar amount for all subcontracted contractors. SUM = (DBEs + all Non-DBEs). Do not include the prime contractor information in this count.
9. Total number of ALL subcontractors – Enter the total number of all subcontracted contractors. SUM = (DBEs + all Non-DBEs). Do not include the prime contractor information in this count.
10. Bid Item Number - Enter bid item number for work, services, or materials supplied to be provided.
11. Description of Work, Services, or Materials Supplied - Enter description of work, services, or materials to be provided. Indicate all work to be performed by DBEs including work performed by the prime contractor's own forces, if the prime is a DBE. If 100% of the item is not to be performed or furnished by the DBE, describe the exact portion to be performed or furnished by the DBE. See LAPM Chapter 9 to determine how to count the participation of DBE firms.
12. DBE Certification Number - Enter the DBE's Certification Identification Number. All DBEs must be certified on the date bids are opened.
13. DBE Contact Information - Enter the name, address, and phone number of all DBE subcontracted contractors. Also, enter the prime contractor's name and phone number, if the prime is a DBE.
14. DBE Dollar Amount - Enter the subcontracted dollar amount of the work to be performed or service to be provided. Include the prime contractor if the prime is a DBE. See LAPM Chapter 9 for how to count full/partial participation.
15. Total Claimed DBE Participation - $: Enter the total dollar amounts entered in the "DBE Dollar Amount" column. %: Enter the total DBE participation claimed ("Total Claimed DBE Participation Dollars" divided by item "Bid Amount"). If the total % claimed is less than item "Contract DBE Goal," an adequately documented Good Faith Effort (GFE) is required (see Exhibit 15-H DBE Information - Good Faith Efforts of the LAPM).
16. Preparer's Signature - The person completing the DBE commitment form on behalf of the contractor's firm must sign their name.
17. Date - Enter the date the DBE commitment form is signed by the contractor's preparer.
18. Preparer's Name - Enter the name of the person preparing and signing the contractor's DBE commitment form.
19. Phone - Enter the area code and phone number of the person signing the contractor's DBE commitment form.
20. Preparer's Title - Enter the position/title of the person signing the contractor's DBE commitment form.

LOCAL AGENCY SECTION

21. Local Agency Contract Number - Enter the Local Agency contract number or identifier.
22. Federal-Aid Project Number - Enter the Federal-Aid Project Number(s).
23. Bid Opening Date - Enter the date contract bids were opened.
24. Contract Award Date - Enter the date the contract was executed.
25. Award Amount – Enter the contract award amount as stated in the executed contract.
26. Local Agency Representative's Signature - The person completing this section of the form for the Local Agency must sign their name to certify that the information in this and the Contractor Section of this form is complete and accurate.
27. Date - Enter the date the DBE commitment form is signed by the Local Agency Representative.
28. Local Agency Representative's Name - Enter the name of the Local Agency Representative certifying the contractor's DBE commitment form.
29. Phone - Enter the area code and phone number of the person signing the contractor's DBE commitment form.
30. Local Agency Representative Title - Enter the position/title of the Local Agency Representative certifying the contractor's DBE commitment form.

WORKERS' COMPENSATION CERTIFICATION
(Submit with Electronic Bid)

PROJECT NO. 801 0021
SR-60/MORENO BEACH DRIVE INTERCHANGE IMPROVEMENTS (PHASE 2)

Labor Code Section 3700 reads, in part:

> Every employer except the State shall secure the payment of compensation in one or more of the following ways:
>
> (a) By being insured against liability to pay compensation by one or more insurers duly authorized to write compensation insurance in this State.
> (b) By securing from the Director of Industrial Relations a certificate of consent to self-insure either as an individual employer, or as one employer in a group of employers, which may be given upon furnishing proof satisfactory to the Director of Industrial Relations of ability to self-insure and to pay any compensation hat may become due to his or her employees.

I am aware of the provisions of Labor Code Section 3700 which require every employer to be insured against liability for workers' compensation or to undertake self-insurance in accordance with the provisions of that code, and I will comply with such provisions before commencing the performance of the work of this contract.

Signed, this _____ day of _____, 20_____.

Name: _____

Title: _____

Signature: _____

(In accordance with Article 5, commencing at Section 1860, Chapter 1, part 7, Division 2, of the Labor Code, the above certificate must be signed and filed with the awarding body prior to performing any work under this contract.)

PUBLIC CONTRACT CODE

PUBLIC CONTRACT CODE SECTION 10285.1 STATEMENT

In conformance with Public Contract Code Section 10285.1 (Chapter 376, Stats. 1985), the bidder hereby declares under penalty of perjury under the laws of the State of California that the bidder has____, has not_____ been convicted within the preceding three years of any offenses referred to in that section, including any charge of fraud, bribery, collusion, conspiracy, or any other act in violation of any state or Federal antitrust law in connection with the bidding upon, award of, or performance of, any public works contract, as defined in Public Contract Code Section 1101, with any public entity, as defined in Public Contract Code Section 1100, including the Regents of the University of California or the Trustees of the California State University. The term "bidder" is understood to include any partner, member, officer, director, responsible managing officer, or responsible managing employee thereof, as referred to in Section 10285.1.

Note: The bidder must place a checkmark after "has" or "has not" in one of the blank spaces provided. The above Statement is part of the Proposal. Signing this Proposal on the signature portion thereof shall also constitute signature of this Statement. Bidders are cautioned that making a false certification may subject the certifier to criminal prosecution.

PUBLIC CONTRACT CODE SECTION 10162 QUESTIONNAIRE

In conformance with Public Contract Code Section 10162, the Bidder shall complete, under penalty of perjury, the following questionnaire:
Has the bidder, any officer of the bidder, or any employee of the bidder who has a proprietary interest in the bidder, ever been disqualified, removed, or otherwise prevented from bidding on, or completing a federal, state, or local government project because of a violation of law or a safety regulation?

Yes ☐ No ☐

If the answer is yes, explain the circumstances in the following space.

EASTERN MUNICIPAL WATER DISTRICT
SUNNYMEAD FLAMING ARROW DRIVE – APPURTENANCES RELOCATION

BIDDER'S 3-YEAR EXPERIENCE RECORD & RESUMES OF KEY PERSONNEL

All bidders must provide a **detailed 3-year** experience record showing successful completion, as a General Contractor (Class A and/or C-34 license), of at least **Three (3)** similar projects within the last (**3**) years on the attached form when submitting your bid.

Additionally, bidders must include resumes of key personnel proposed to work on this project when submitting your bid. This information will be critical in meeting requirements as a responsible bidder.

DETAILED EXPERIENCE RECORD

PLEASE USE ADDITIONAL SHEETS

YEAR	TYPE/DESCRIPTION OF WORK	VALUE OF WORK PERFORMED	LOCATION OF WORK (CITY)	ENGINEER / CONTACT PERSON Address & phone #	OWNER / (CONTACT PERSON Address & phone #

RESUMES OF KEY PERSONNEL
(ATTACH HERE)

Agreement No._____

AGREEMENT

CITY PROJECT NO. 801 0021
SR-60/MORENO BEACH DRIVE INTERCHANGE IMPROVEMENTS (PHASE 2)

THIS Agreement, effective as of the date signed by the City of Moreno Valley, is by and between the City of Moreno Valley, a municipal corporation, County of Riverside, State of California, hereinafter called the "City" and _____, hereinafter called the "Contractor."

That the City and the Contractor for the consideration hereinafter named, agree as follows:

1. CONTRACT DOCUMENTS. The Contract Documents consist of the following, which are incorporated herein by this reference:

A. Governmental approvals, including, but not limited to, permits required for the Work
B. Community Workforce Agreement by and Between the City of Moreno Valley and San Bernardino/Riverside Counties Building and Construction Trades Council, AFL-CIO and the Signatory Craft Councils and Unions ("CWA") [PROJECTS OVER $1,000,000]
C. Any and all Contract Change Orders and Construction Change Directives issued after execution of this Agreement
D. This Agreement
E. Addenda Nos. _____ inclusive, issued prior to the opening of the Bids
F. The bound Contract Documents that includes City Special Provisions, including the General Provisions and Technical Provisions
G. Equal Employment Opportunity Certification, Debarment and Suspension Certification, Mandatory EMWD Experience Record/Resumes, and Federal Wage Rates.
H. Standard Specifications of the State of California, Department of Transportation
I. Standard Specifications for Public Works Construction ("Greenbook") – latest edition in effect at the Bid Deadline, as modified by the City Special Provisions
J. Reference Specifications/Reference Documents other than those listed in paragraph 2, below
K. Project Construction Plans
L. Caltrans Standard Plans
M. Other Agency Standard Plans
N. Permits, Issued and Required
O. Contractor's Labor and Materials Payment Bond (for reference only)
P. Contractor's Faithful Performance Bond (for reference only)
Q. Contractor's Certificates of Insurance and Additional Insured Endorsements
R. Contractor's Bidder's Proposal and Subcontractor Listing, (and Exhibit 12-B - Bidder's List of Subcontractors (DBE and Non-DBE)
S. Exhibit 15-G - Construction Contract DBE Commitment

In the event of conflict or discrepancy between any of the Contract Documents, the provisions placing a more stringent requirement on the Contractor shall prevail. The Contractor shall provide the better quality or greater quantity of Work and/or materials unless otherwise directed by City in writing. In the event none of the Contract Documents place a more stringent

requirement or greater burden on the Contractor, the controlling provision shall be that which is found in the document with higher precedence in accordance with the above order of precedence.

If the Contractor observes that any portion of the Contract Documents are at variance with each other, Contractor shall promptly notify the Engineer in writing by RFI. If the Contractor performs any Work when the Contractor knows or should have reasonably known the Contract Documents presented a conflict, Contractor shall assume full responsibility therefor and shall bear all risks and costs (without adjustment to the Contract Price) directly or indirectly attributable to the correction of the Work.

2. REFERENCE DOCUMENTS. The following Reference Documents are not considered Contract Documents and are made available to the Contractor prior to the Bid Deadline for informational purposes:

A. Informational Handout – Asbestos Survey Report
B. *Informational Handout – Environmental Commitment Record
C. Informational Handout – Foundation Report
D. *Informational Handout – Frontier Communication Relocation of Facilities Plans
E. Informational Handout – Geotechnical Design Report Addendum #1
F. Informational Handout – Geotechnical Design Report
G. Informational Handout – Initial Site Assessment
H. Informational Handout – Materials Report Addendum #2
I. *Informational Handout – SCE Bridge Conduit Installation Plans
J. *Informational Handout – SCE Work Order Maps

**Also included within the Contract Documents*

3. SCOPE OF WORK. The Contractor shall perform and provide all materials, tools, equipment, labor, and services necessary to complete the Work described in the Contract Documents, except as otherwise provided in the Plans, Standard Specifications, or City Special Provisions to be the responsibility of others.

4. PAYMENT.

4.1. **Contract Price and Basis for Payment**. In consideration for the Contractor's full, complete, timely, and faithful performance of the Work required by the Contract Documents, the City shall pay Contractor for the actual quantity of Work required under the Bid Items awarded by the City performed in accordance with the lump sum prices and unit prices for Bid Items and Additive Alternate Bid Items, if any, set forth the Bidder's Proposal submitted with the Bid. The sum of the unit prices and lump sum prices for the Base Bid Items and Additive Alternate Bid Items, if any, awarded by the City is _____ Dollars ($____ _____) ("Contract Price"). The Additive Alternate Bid Items selected by the City and included in the Contract are: _____, _____, and _____. It is understood and agreed that the quantities set forth in the Bidder's Proposal for which unit prices are fixed are estimates only and that City will pay and Contractor will accept, as full payment for these items of work, the unit prices set forth in the Bidder's Proposal multiplied by the actual number of units performed, constructed, or completed as directed by the City Engineer.

4.2. **Payment Procedures**. Based upon applications for payment submitted by the Contractor to the City, the City shall make payments to the Contractor in accordance with Article 9 of the Standard Specifications, as modified by Article 9 of the City Special Provisions.

5. CONTRACT TIME.

A. Contract Time. The Contract Time shall be determined in accordance with the following:

Base Bids 1-4 plus Additive Alternate Bid 1	367 Working Days
Base Bids 1-4 plus Additive Alternate Bid 2	330 Working Days
Plant Establishment	440 Working Days

B. Initial Notice to Proceed. The date specified in the Notice to Proceed constitutes the date of commencement of the Contract Time of **Three Hundred Sixty Seven (367) Working Days for Base Bids 1 through 4 plus Additive Alternate Bid 1 and Four Hundred Forty (440) Working Days for Plant Establishment. If Additive Alternate Bid 2 is chosen, deduct Thirty Seven (37) Working Days from Three Hundred Sixty Seven (367) Working Days for a total of Three Hundred Thirty (330) Working Days. The Plant Establishment duration remains the same.** The Contract Time consists of the time necessary to complete construction of the Project.

The Notice to Proceed to Fulfill Preconstruction Requirements and Notice to Proceed with Order of Materials shall further specify that Contractor must complete the preconstruction requirements and order materials within **Fifty-Five (55) Calendar Days** after the date of execution of the Contract; this duration is NOT part of the Contract Time.

Preconstruction requirements include, but are not limited to, the following:

- Submitting and obtaining approval of construction schedule
- Submitting and obtaining approval of Traffic Control Plans, as required
- Submitting and obtaining approval of the Stormwater Pollution Prevention Plan (SWPPP)/Water Pollution Control Plan (WPCP)
- Submitting and obtaining approval of critical required submittals
- Installation of the approved Project Identification Signs, as required
- Obtaining approved no fee Encroachment Permits
- Obtaining a Temporary Use Permit for a construction yard
- Notifying all agencies, utilities, residents, etc., as outlined in the Contract Documents
- Completion of all pre-construction activities under Environmental Mitigations

If the City's issuance of a Notice to Proceed to Fulfill Preconstruction Requirements and Notice to Proceed with Order of Materials is delayed due to Contractor's failure to return the fully executed Agreement and insurance and bond documents within ten (10) Working Days after Contract award, then Contractor agrees to the deduction of one (1) Working Day from the number of days to complete the Project for every Working Day of delay in the City's receipt of said documents. This right is in addition to and does not affect the City's right to demand forfeiture of Contractor's Bid Security if Contractor persistently delays in providing the required documentation.

C. Notice to Proceed with Construction. After all preconstruction requirements are met and materials have been ordered in accordance with the Notice to Proceed to Fulfill Preconstruction Requirements and Notice to Proceed with Order of Materials, the City shall issue

the “Notice to Proceed with Construction,” at which time the Contractor shall diligently prosecute the Work, including corrective items of Work, day to day thereafter, within the Contract Time.

6. LIQUIDATED DAMAGES AND CONTROL OF WORK.

6.1. **Liquidated Damages.** The Contractor and City (collectively, the “Parties”) have agreed to liquidate damages with respect to Contractor’s failure to order all materials in accordance with the Notice to Proceed with Order of Materials and/or failure to fulfill the preconstruction requirements, and/or failure to complete the Work within the Contract Time. The Parties intend for the liquidated damages set forth herein to apply to this Contract as set forth in Government Code Section 53069.85 and in Public Contract Code Section 7203. Contractor acknowledges and agrees that the liquidated damages are intended to compensate the City solely for Contractor’s failure to meet the deadline for completion of the Work and will not excuse Contractor from liability from any other breach, including any failure of the Work to conform to the requirements of the Contract Documents.

In the event that Contractor fails to order all materials in accordance with the Notice to Proceed with Order of Materials and/or fails to fulfill the preconstruction requirements and/or fails to complete the Work within the Contract Time, Contractor agrees to pay the City **$10,000.00 per Working day** that completion of the Work is delayed beyond the Contract Time, as adjusted by Contract Change Orders. If all the work except plant establishment or permanent erosion control establishment is completed and the total number of working days have expired, liquidated damages are **$950.00 per Working day**. The Contractor will not be assessed liquidated damages for delays occasioned by the failure of the City or of the owner of a utility to provide for the removal or relocation of utility facilities.

The Contractor and City acknowledge and agree that the foregoing liquidated damages have been set based on an evaluation of damages that the City will incur in the event of late completion of the Work. The Contractor and City acknowledge and agree that the amount of such damages are impossible to ascertain as of the date of execution hereof and have agreed to such liquidated damages to fix the City’s damages and to avoid later disputes. It is understood and agreed by Contractor that liquidated damages payable pursuant to this Agreement are not a penalty and that such amounts are not manifestly unreasonable under the circumstances existing as of the date of execution of this Agreement.

It is further mutually agreed that the City will have the right to deduct liquidated damages against progress payments or retainage and that the City will issue a Change Order or Construction Change Directive and reduce the Contract Price accordingly. In the event the remaining unpaid Contract Price is insufficient to cover the full amount of liquidated damages, Contractor shall pay the difference to the City.

Liquidated damages are owed automatically and without notice of any kind upon the accrual of each day of delay. City may at any time deduct liquidated damages as are payable hereunder from money due or to become due to Contractor, or pursue any other legal remedy to collect such liquidated damages from Contractor and/or its Surety. Neither the City's failure or delay in deducting liquidated damages from payments otherwise due Contractor, nor City's failure or delay in notifying Contractor of the accrual of liquidated damages, shall be deemed a waiver of City's right to liquidated damages.

City's rights under this Section shall not be interpreted as precluding or limiting: (1) any right or remedy of City arising from an event of Contractor default other than a failure to complete the Work within the Contract Time; or (2) City's right to order an acceleration, at Contractor's expense, of performance of the Work to overcome delay, including, without limitation, a delay for which City has the right to assess and/or accrue liquidated damages. The availability of liquidated damages shall not limit City's right to terminate the Contractor's performance and accrual and/or assessment of liquidated damages does not constitute a waiver of such rights.

6.2. **Owner is Exempt from Liability for Early Completion Delay Damages**. While the Contractor may schedule completion of all of the Work, or portions thereof, earlier than the Contract Time, the Owner is exempt from liability for and the Contractor will not be entitled to an adjustment of the Contract Sum or to any additional costs, damages, including, but not limited to, claims for extended general conditions costs, home office overhead, jobsite overhead, and management or administrative costs, or compensation whatsoever, for use of float time or for Contractor's inability to complete the Work earlier than the Contract Time for any reason whatsoever, including but not limited to, delay cause by Owner or other Excusable Compensable Delay. See Section 6-4 of the Standard Specifications and City Special Provisions regarding compensation for delays.

6.3. Any work completed by the Contractor after the issuance of a Stop Work Notice by the City shall be rejected and/or removed and replaced as specified in Section **6-2** of the Special Provisions.

7. INSURANCE.

7.1. **General**. The Contractor shall procure and maintain at its sole expense and throughout the term of this Agreement, any extension thereof, Commercial General Liability, Automobile Liability, and Workers' Compensation Insurance with such coverage limits as described herein.

7.2. **Additional Insured Endorsements**. The Contractor shall cause the insurance required by the Contract Document to include the City of Moreno Valley, the City Council and each member thereof, the Moreno Valley Housing Authority (MVHA), and the Moreno Valley Community Services District (CSD), Western Riverside Council of Governments (WRCOG), Riverside County Flood Control & Water Conservation District (RCFC&WCD, Department of Transportation (Caltrans), and their respective officials, employees, commission members, officers, directors, agents, employees, volunteers and representatives as an additional insureds. For the Commercial General Liability coverage, said parties shall be named as additional insureds utilizing either:

1. Insurance Services Office ("ISO") Additional Insured endorsement CG 20 10 (11/85); or

2. ISO Additional Insured endorsement CG 20 10 (10/01) and Additional Insured Completed Operations endorsement CG 20 37 (10/01); or

3. Substitute endorsements providing equivalent coverage, approved by the City.

The endorsements shall be signed by a person authorized by the insurer to bind coverage on its behalf. The coverage shall contain no special limitations on the scope of protection afforded to

such additional insureds. Coverage for such additional insureds does not extend to liability to the extent prohibited by Insurance Code Section 11580.4.

7.3. **Waivers of Subrogation**. All policies of insurance required by the Contract Documents shall include or be endorsed to provide a waiver by the insurers of any rights of recovery or subrogation that the insurers may have at any time against the City of Moreno Valley, the City Council and each member thereof, the Moreno Valley Housing Authority (MVHA), and the Moreno Valley Community Services District (CSD), Western Riverside Council of Governments (WRCOG), Riverside County Flood Control & Water Conservation District (RCFC&WCD, Department of Transportation (Caltrans), and their respective officials, employees, commission members, officers, directors, agents, employees, volunteers and representatives.

7.4. **Primary Coverage**. All policies and endorsements shall stipulate that the Contractor's (and the Subcontractors') insurance coverage shall be primary insurance as respects the City of Moreno Valley, the City Council and each member thereof, the Moreno Valley Housing Authority (MVHA), and the Moreno Valley Community Services District (CSD), and Western Riverside Council of Governments (WRCOG), Riverside County Flood Control & Water Conservation District (RCFC&WCD, Department of Transportation (Caltrans), and their respective officials, employees, commission members, officers, directors, agents, employees, volunteers and representatives, and shall be excess of the Contractor's (and its Subcontractors') insurance and shall not contribute with it.

7.5. **Coverage Applies Separately to Each Insured and Additional Insured**. Coverage shall state that the Contractor's (and its Subcontractors') insurance shall apply separately to each insured or additional insured against whom claim is made or suit is brought, except with respect to the limits of the insurer's liability. Coverage shall apply to any claim or suit brought by an additional insured against a named insured or other insured.

7.6. **Self-Insurance**. Any self-insurance (including deductibles or self-insured retention in excess of $50,000) in lieu of liability insurance must be declared by Contractor and approved by the City in writing prior to execution of the Agreement. The City's approval of self-insurance, if any, is within the City's sole discretion and is subject to the following conditions:

1. Contractor must, at all times during the term of the Agreement and for a period of at least **one (1)** year after completion of the Project, and any extension of the one-year correction guarantee period in accordance with Section 313.3 of the City Special Provisions, maintain and upon Owner's reasonable request provide evidence of:

   (a) Contractor's "net worth" (defined as "total assets" [defined as all items of value owned by the Contractor including tangible items such as cash, land, personal property and equipment and intangible items such as copyrights and business goodwill]) minus total outside liabilities must be reflected in a financial statement for the prior fiscal year reflecting sufficient income and budget for Contractor to afford at least one loss in an amount equal to the amount of self-insurance;

   (b) Financial statements showing that Contractor has funds set aside/budgeted to finance the self-insured fund (i.e., Contractor has a program that fulfills functions that a primary insurer would fill; and

(c) A claims procedure that identifies how a claim is supposed to be tendered to reach the financing provided by the self-insured fund.

2. If at any time after such self-insurance has been approved Contractor fails to meet the financial thresholds or otherwise fails to comply with the provisions set forth in this Paragraph 7, at the option of the City:

(a) the Contractor shall immediately obtain and thereafter maintain the third party insurance required under this Paragraph 7 and otherwise on the terms required above; or

(b) The insurer shall reduce or eliminate such deductibles or self-insured retention as respects the City, its officers, officials, employees and volunteers; or

(c) The Contractor shall procure a bond guaranteeing payment of losses and related investigation, claim administration, and defense expenses.

7.7. **Insurer Financial Rating**. Insurance companies providing insurance hereunder shall be rated A-:VII or better in Best's Insurance Rating Guide and shall be legally licensed and qualified to conduct insurance business in the State of California.

7.8. **Notices to City of Cancellation or Changes**. Each insurance policy described in this Paragraph 7 shall contain a provision or be endorsed to state that coverage will not be cancelled without **thirty (30) days'** prior written notice by certified or registered mail to the City (this obligation may be satisfied in the alternative by requiring such notice to be provided by Contractor's insurance broker and set forth on its Certificate of Insurance provided to the City), except that cancellation for non-payment of premium shall require (10) days prior written notice by certified or registered mail. If an insurance carrier cancels any policy or elects not to renew any policy required to be maintained by Contractor pursuant to the Contract Documents, Contractor agrees to give written notice to the City at the address indicated on the first page of the Agreement. Contractor agrees to provide the same notice of cancellation and non-renewal to the City that is required by such policy(ies) to be provided to the First Named Insured under such policy(ies). Contractor shall provide confirmation that the required policies have been renewed not less than seven (7) days prior to the expiration of existing coverages and shall deliver renewal or replacement policies, certificates and endorsements to the City Clerk within fourteen (14) days of the expiration of existing coverages. Contractor agrees that upon receipt of any notice of cancellation or alteration of the policies, Contractor shall procure within five (5) days, other policies of insurance similar in all respects to the policy or policies to be cancelled or altered. Contractor shall furnish to the City Clerk copies of any endorsements that are subsequently issued amending coverage or limits within fourteen (14) days of the amendment.

7.9. **Commercial General Liability**. Coverage shall be written on an ISO Commercial General Liability "occurrence" form CG 00 01 (10/01 or later edition) or equivalent form approved by the City for coverage on an occurrence basis. The insurance shall cover liability, including, but not limited to, that arising from premises operations, stop gap liability, independent contractors, products-completed operations, personal injury, advertising injury, and liability assumed under an insured contract. The policy shall be endorsed to provide the Aggregate Per Project Endorsement ISO form CG 25 03 (11/85). Coverage shall contain no contractors' limitation or other endorsement limiting the scope of coverage for liability arising from pollution, explosion,

collapse, or underground (x, c, u) property damage. Contractor shall provide Products/Completed Operations coverage to be maintained continuously for a minimum of **one (1) year** after Final Acceptance of the Work, and any extension of the one-year correction guarantee period in accordance with Section 3-13.3 of the City Special Provisions.

Contractor shall maintain Commercial General Liability insurance with the following minimum limits: $1,000,000 per occurrence / $2,000,000 aggregate / $2,000,000 products-completed operations.

7.10. **Business Automobile Liability**. Coverage shall be written on ISO form CA 00 01 (12/93 or later edition) or a substitute form providing equivalent coverage for owned, hired, leased and non-owned vehicles, whether scheduled or not, with $1,000,000 combined single limit per accident for bodily injury and property damage. If necessary, the policy shall be endorsed to provide contractual liability coverage.

7.11. **Workers' Compensation**. Contractor shall comply with the applicable sections of the California Labor Code concerning workers' compensation for injuries on the job. Compliance is accomplished in one of the following manners:

1. Provide copy of permissive self-insurance certificate approved by the State of California; or
2. Secure and maintain in force a policy of workers' compensation insurance with statutory limits and Employer's Liability Insurance with a minimal limit of **$1,000,000** per accident; or
3. Provide a "waiver" form certifying that no employees subject to the Labor Code's Workers' Compensation provision will be used in performance of this Contract.

7.12. **Subcontractors' Insurance**. The Contractor shall include all Subcontractors as insureds under its policies or shall furnish separate certificates and endorsements for each Subcontractor. All coverages for Subcontractors shall be subject to all of the requirements stated herein.

8. BONDS. The Contractor shall provide two surety bonds. The Contractor shall furnish a satisfactory Performance Bond meeting all statutory requirements of the State of California on the form provided by the City. The bond shall be furnished as a guarantee of the faithful performance of the requirements of the Contract Documents as may be amended from time to time, including, but not limited to, liability for delays and damages (both direct and consequential) to the City and the City's Separate Contractors and consultants, warranties, guarantees, and indemnity obligations, in an amount that shall remain equal to one hundred percent (100%) of the Contract Price.

The Contractor shall furnish a separate satisfactory Labor and Materials Payment Bond meeting all statutory requirements of the State of California on the form provided by the City in an amount that shall remain equal to one hundred percent (100%) of the Contract Price to secure payment of all claims, demands, stop payment notices, or charges of the State of California, of material suppliers, mechanics, or laborers employed by the Contractor or by any Subcontractor, or any person, form, or entity eligible to file a stop payment notice with respect to the Work.

All bonds shall be executed by a California-admitted surety insurer. Bonds issued by a California-admitted surety insurer listed on the latest version of the U.S Department of Treasury Circular

570 shall be deemed accepted unless specifically rejected by the City. Bonds issued by sureties not listed in Treasury Circular 570 must be accompanied by all documents enumerated in California Code of Civil Procedure Section 995.660(a). The bonds shall bear the same date as the Contract. The attorney-in-fact who executes the required bonds on behalf of the surety shall affix thereto a certified and current copy of the power of attorney. In the event of changes that increase the Contract Price, the amount of each bond shall be deemed to increase and at all times remain equal to the Contract Price. The signatures shall be acknowledged by a notary public. Every bond must display the surety's bond number and incorporate the Contract for construction of the Work by reference. The terms of the bonds shall provide that the surety agrees that no change, extension of time, alteration, or modification of the Contract Documents or the Work to be performed thereunder shall in any way affect its obligations and shall waive notice of any such change, extension of time, alteration, or modification of the Contract Documents. The surety further agrees that it is obligated under the bonds to any successor, grantee, or assignee of the City.

Upon the request of any person or entity appearing to be a potential beneficiary of bonds covering payment of obligations arising under the Contract, the Contractor shall promptly furnish a copy of the bonds or shall authorize a copy to be furnished.

Should any bond become insufficient, or should any of the sureties, in the opinion of the City, become non-responsible or unacceptable, the Contractor shall, within ten (10) Calendar Days after receiving notice from the City, provide written documentation to the Satisfaction of the City that Contractor has secured new or additional sureties for the bonds; otherwise the Contractor shall be in default of the Contract. No further payments shall be deemed due or will be made under Contract until a new surety(ies) qualifies and is accepted by the City.

Contractor agrees that the Labor and Materials Payment Bond and Faithful Performance Bond attached to this Agreement are for reference purposes only, and shall not be considered a part of this Agreement. Contractor further agrees that said bonds are separate obligations of the Contractor and its Surety, and that any attorney's fee provision contained in any payment bond or performance bond shall not apply to this Agreement. In the event there is any litigation between the parties arising from the breach of this Agreement, each party will bear its own attorneys' fees in the litigation.

9. RECORDS. The Contractor and its Subcontractors shall maintain and keep books, payrolls, invoices of materials, and Project records current, and shall record all transactions pertaining to the Contract in accordance with generally acceptable accounting principles. Said books and records shall be made available to the City of Moreno Valley, Riverside County, the State of California, the Federal Government, and to any authorized representative thereof for purposes of audit and inspection at all reasonable times and places. All such books, payrolls, invoices of materials, and records shall be retained for at least three (3) years after Final Acceptance.

10. INDEMNIFICATION.

10.1. **General**. To the fullest extent permitted by law, the Contractor assumes liability for and agrees, at the Contractor's sole cost and expense, to promptly and fully indemnify, protect, hold harmless and defend (even if the allegations are false, fraudulent, or groundless), the City of Moreno Valley, its City Council, the Moreno Valley Housing Authority (MVHA), and the Moreno Valley Community Services District (CSD), and Western Riverside Council of Governments, Riverside County Flood Control & Water Conservation District (RCFC&WCD, Department of

Transportation (Caltrans), and all of their respective officials, officers, directors, employees, commission members, representatives and agents ("Indemnitees"), from and against any and all claims, allegations, actions, suits, arbitrations, administrative proceedings, regulatory proceedings, or other legal proceeds, causes of action, demands, costs, judgments, liens, stop notices, penalties, liabilities, damages, losses, anticipated losses of revenues, and expenses (including, but not limited to, any fees of accountants, attorneys, experts or other professionals, or investigation expenses), or losses of any kind or nature whatsoever, whether actual, threatened or alleged, arising out of, resulting from, or in any way (either directly or indirectly), related to the Work, the Project or any breach of the Contract by Contractor or any of its officers, agents, employees, Subcontractors, Sub-subcontractors, or any person performing any of the Work, pursuant to a direct or indirect contract with the Contractor ("Indemnity Claims"). Such Indemnity Claims include, but are not limited to, claims for:

A. Any activity on or use of the City's premises or facilities;
B. Any liability incurred due to Contractor acting outside the scope of its authority pursuant to the Contract, whether or not caused in part by an Indemnified Party;
C. The failure of Contractor or the Work to comply with any Applicable Law, permit or orders;
D. Any misrepresentation, misstatement or omission with respect to any statement made in the Contract Documents or any document furnished by the Contractor in connection therewith;
E. Any breach of any duty, obligation or requirement under the Contract Documents, including, but not limited to any breach of Contractor's warranties, representations or agreements set forth in the Contract Documents;
F. Any failure to coordinate the Work with City's Separate Contractors;
G. Any failure to provide notice to any party as required under the Contract Documents;
H. Any failure to act in such a manner as to protect the Project from loss, cost, expense or liability;
I. Bodily or personal injury, emotional injury, sickness or disease, or death at any time to any persons including without limitation employees of Contractor;
J. Damage or injury to real property or personal property, equipment and materials (including, but without limitation, property under the care and custody of the Contractor or the City) sustained by any person or persons (including, but not limited to, companies, corporations, utility company or property owner, Contractor and its employees or agents, and members of the general public);
K. Any liability imposed by Applicable Law including, but not limited to criminal or civil fines or penalties;
L. Any dangerous, hazardous, unsafe or defective condition of, in or on the Site, of any nature whatsoever, which may exist by reason of any act, omission, neglect, or any use or occupation of the Site by Contractor, its officers, agents, employees, or Subcontractors;
M. Any operation conducted upon or any use or occupation of the Site by Contractor, its officers, agents, employees, or Subcontractors under or pursuant to the provisions of the Contract or otherwise;
N. Any acts, errors, omission or negligence of Contractor, its officers, agents, employees, or Subcontractors;

O. Infringement of any patent rights, licenses, copyrights or intellectual property which may be brought against the Contractor or Owner arising out of Contractor's Work, for which the Contractor is responsible; and

P. Any and all claims against the City seeking compensation for labor performed or materials used or furnished to be used in the Work or alleged to have been furnished on the Project, including all incidental or consequential damages resulting to the City from such claims.

10.2. **Effect of Indemnitees' Active Negligence**. Contractor's obligations to indemnify and hold the Indemnitees harmless **exclude** only such portion of any Indemnity Claim which is attributable to the active negligence or willful misconduct of the Indemnitee, provided such active negligence or willful misconduct is determined by agreement of the parties or by findings of a court of competent jurisdiction. In instances where an Indemnitee's active negligence accounts for only a percentage of the liability for the Indemnity Claim involved, the obligation of Contractor will be for that entire percentage of liability for the Indemnity Claim not attributable to the active negligence or willful misconduct of the Indemnitee(s). Such obligation shall not be construed to negate, abridge or otherwise reduce any other right or obligation of indemnity which would otherwise exist as to any party or person described in this Paragraph 10. Subject to the limits set forth herein, the Contractor, at its own expense, shall satisfy any resulting judgment that may be rendered against any Indemnitee resulting from an Indemnity Claim. The Indemnitees shall be consulted with regard to any proposed settlement.

10.3. **Independent Defense Obligation.** The duty of the Contractor to indemnify and hold harmless the Indemnitees includes the separate and independent duty to defend the Indemnitees, which duty arises immediately upon receipt by Contractor of the tender of any Indemnity Claim from an Indemnitee. The Contractor's obligation to defend the Indemnitee(s) shall be at Contractor's sole expense, and not be excused because of the Contractor's inability to evaluate liability or because the Contractor evaluates liability and determines that the Contractor is not liable. This duty to defend shall apply whether or not an Indemnity Claim has merit or is meritless, or which involves claims or allegations that any or all of the Indemnitees were actively, passively, or concurrently negligent, or which otherwise asserts that the Indemnitees are responsible, in whole or in part, for any Indemnity Claim. The Contractor shall respond within thirty (30) Calendar Days to the tender of any Indemnity Claim for defense and/or indemnity by an Indemnitee, unless the Indemnitee agrees in writing to an extension of this time. The defense provided to the Indemnitees by Contractor shall be by well qualified, adequately insured and experienced legal counsel acceptable to the City.

10.4. **Intent of Parties Regarding Scope of Indemnity.** It is the intent of the parties that the Contractor and its Subcontractors of all tiers shall provide the Indemnitees with the broadest defense and indemnity permitted by Applicable Law. In the event that any of the defense, indemnity or hold harmless provisions in the Contract Documents are found to be ambiguous, or in conflict with one another, it is the parties' intent that the broadest and most expansive interpretation in favor of providing defense and/or indemnity to the Indemnitees be given effect.

10.5. **Waiver of Indemnity Rights Against Indemnitees.** With respect to third party claims against the Contractor, to the fullest extent permitted by law, the Contractor waives any and all rights to any type of express or implied indemnity against the Indemnitees.

10.6. **Subcontractor Requirements.** In addition to the requirements set forth hereinabove, Contractor shall ensure, by written subcontract agreement, that each of Contractor's

Subcontractors of every tier shall protect, defend, indemnify and hold harmless the Indemnitees with respect to Indemnity Claims arising out of, in connection with, or in any way related to each such Subcontractors' Work on the Project in the same manner in which Contractor is required to protect, defend, indemnify and hold the Indemnitees harmless. In the event Contractor fails to obtain such defense and indemnity obligations from others as required herein, Contractor agrees to be fully responsible to the Indemnitees according to the terms of this Paragraph 10. Contractor further agrees to ensure that each subcontractor will execute a separate Letter of Assent to the terms of the CWA if the total project cost is $1,000,000 or more and will fully indemnify the City for any claims or losses which result from a Subcontractor's failure to adhere to the terms of the CWA on this project.

10.7. **No Limitation or Waiver of Rights.** Contractor's obligations under this Paragraph 10 are in addition to any other rights or remedies which the Indemnitees may have under the law or under the Contract Documents. Contractor's indemnification and defense obligations set forth in this Paragraph 10 are separate and independent from the insurance provisions set forth in the Contract Documents, and do not limit, in any way, the applicability, scope, or obligations set forth in such insurance provisions. The purchase of insurance by the Contractor with respect to the obligations required herein shall in no event be construed as fulfillment or discharge of such obligations. In any and all claims against the Indemnitees by any employee of the Contractor, any Subcontractor, any supplier of the Contractor or Subcontractors, anyone directly or indirectly employed by any of them, or anyone for whose acts any of them may be liable, the obligations under this Paragraph 10 shall not be limited in any way by any limitation on the amount or type of damages, compensation or benefits payable by or for the Contractor or any Subcontractor or any supplier of either of them, under workers' or workmen's compensation acts, disability benefit acts or other employee benefit acts. Failure of the City to monitor compliance with these requirements imposes no additional obligations on the City and will in no way act as a waiver of any rights hereunder.

10.8. **Withholding to Secure Obligations.** In the event an Indemnity Claim arises prior to final payment to Contractor, the City may, in its sole discretion, reserve, retain or apply any monies due Contractor for the purpose of resolving such Indemnity Claims; provided, however, the City may release such funds if the Contractor provides the City with reasonable assurances of protection of the Indemnitees' interests. The City shall, in its sole discretion, determine whether such assurances are reasonable.

10.9. **Survival of Indemnity Obligations.** Contractor's obligations under this Paragraph 10 are binding on Contractor's and its Subcontractors' successors, heirs and assigns and shall survive the completion of the Work or termination of the Contractor's performance of the Work.

11. SUCCESSORS AND ASSIGNS. The Parties bind themselves, their heirs, executors, administrators, successors and assigns the covenants, agreements and obligations contained in the Contract Documents. The Contractor shall not, either voluntarily or by action of law, assign any right or obligation of the Contractor under the Contract Documents without prior written consent of the City.

(SIGNATURE PAGE FOLLOWS)

CITY OF MORENO VALLEY, Municipal Corporation

BY: _____
Mike Lee, City Manager

DATE: _____

(Name of Contractor)

License No./
Classification: _____

Expiration Date: _____

Federal I.D. No.: _____

INTERNAL USE ONLY

APPROVED AS TO LEGAL FORM:

_____
City Attorney

_____
Date

RECOMMENDED FOR APPROVAL:

_____
Public Works Director/City Engineer

_____
Date

PRINT NAME: _____

SIGNATURE: _____

TITLE: _____

DATE: _____

PRINT NAME: _____

SIGNATURE: _____

TITLE: _____

DATE: _____

SIGNING INSTRUCTIONS TO THE CONTRACTOR:

Signature(s) must be accompanied by a completed notary certificate of acknowledgement attached hereto. A general partner must sign on behalf of a partnership. **Two (2)** corporate officers must sign on behalf of a corporation unless the corporation has a corporate resolution that allows one person to sign on behalf of the corporation; if applicable, said resolution must be attached hereto. The corporate seal may be affixed hereto.

CALIFORNIA ALL-PURPOSE CERTIFICATE OF ACKNOWLEDGMENT

SAMPLE

State of California

County of _____

On _____ before me, _____,
(Here insert name and title of the officer)

personally appeared _____,

who proved to me on the basis of satisfactory evidence to be the person(s) whose name(s) is/are subscribed to the within instrument and acknowledgement to me that he/she they executed the same in his/her/their authorized capacity(ies), and that by his/her/their signature(s) on the instrument the person(s), or the entity upon behalf of which the person(s) acted, executed the instrument.

I certify under PENALTY OF PERJURY under the laws of the State of California that the foregoing paragraph is true and correct.

WITNESS my hand and official seal.

_____ (Notary Seal)
Signature of Notary Public

DESCRIPTION OF THE ATTACHED DOCUMENT

AGREEMENT SIGNATURE PAGE
(Title or description of attached document)

_____
(Title or description of attached document continued)

Number of Pages _____

Document Date _____

_____
Additional Information

CAPACITY CLAIMED BY THE SIGNER

- ☐ Individual(s)
- ☐ Corporate Officer

  _____
  (Title)
- ☐ Partner (s)
- ☐ Attorney-in-Fact
- ☐ Other _____

ADDITIONAL OPTIONAL INFORMATION

INSTRUCTIONS FOR COMPLETING THIS FORM

Any acknowledgment completed in California must contain verbiage exactly as appears above in the notary section or a separate acknowledgment form must be property completed and attached to that document. The only exception is if a document is recorded outside of California. In such instances, any alternative acknowledgment verbiage as may be printed on such a document so long as the verbiage does not require the notary to do something that is illegal for a notary in California (i.e. certifying the authorized capacity of the signer). Please check the document carefully for proper notarial wording and attach this form if required.

- State and County information must be the State and County where the document signer(s) personally appeared before the notary public for acknowledgment.
- Date of notarization must be the date that the signer(s) personally appeared which must also be the same date the acknowledgment is completed.
- The notary public must print his or her name as it appears within his or her commission followed by a comma and then your title (notary public).
- Print the name(s) of document signer(s) who personally appear at the time of notarization.
- Indicate the correct singular or plural forms by crossing off incorrect forms (i.e. ~~he~~/she/~~they~~, is/~~are~~) or circling the correct forms. Failure to correctly indicate this information may lead to rejection of document recording.
- The notary seal impression must be clear and photographically reproducible. Impression must not cover text or lines. If seal impression smudges, re-seal if a sufficient area permits, otherwise complete a different acknowledgment form.
- Signature of the notary public must match the signature on file with the office of the county clerk.
  - ❖ Additional information is not required but could help to ensure this acknowledgment is not misused or attached to a different document.
  - ❖ Indicate title or type of attached document, number of pages and date.
  - ❖ Indicate the capacity claimed by the signer. If the claimed capacity is a corporate officer, indicate the title (i.e. CEO, CFO, Secretary).
- Securely attach this document to the signed document.

CONTRACTOR'S BONDS

BOND NO. _____

PREMIUM $_____

FAITHFUL PERFORMANCE BOND
(100% of Total Contract Price)

CITY PROJECT NO. 801 0021
SR-60/MORENO BEACH DRIVE INTERCHANGE IMPROVEMENTS (PHASE 2)

KNOW ALL MEN AND WOMEN BY THESE PRESENTS:

THAT WHEREAS, the City Council of the City of Moreno Valley, State of California, known as "City," has awarded to _____, as Principal hereinafter designated as "Contractor" and have entered into an Agreement whereby the Contractor agrees to construct or install and complete certain designated public improvements, which said Agreement, effective on the date signed by the City Manager, and identified as **City Project No. 801 0021** and all Contract Documents are hereby referred to and made a part hereof; and

WHEREAS, said Contractor under the terms of said Contract Documents is required to furnish a bond guaranteeing the faithful performance of said Agreement;

NOW THEREFORE, we the undersigned Contractor and_____, as Surety, are held and firmly bound unto the City of Moreno Valley, County of Riverside in the penal sum of_____ dollars, ($_____), lawful money of the United States, to be paid to the said City or its certain attorney, its successors and assigns; for which payment, well and truly to be made, we bind ourselves, our heirs, executors and administrators, successors and assigns, jointly and severally liable (CCP 995.320 (a)(1)), firmly by these presents.

THE CONDITION OF THIS OBLIGATION IS SUCH, that if the above bound Contractor, his or her or its heirs, executors, administrators, successors or assigns, shall in all things stand to and abide by, and well and truly keep and perform the covenants, conditions and provisions in said Contract Documents and any alterations thereof made as therein provided, on his or her or their part, to be kept and performed at the time and in the manner therein specified, and in all respects according to their true intent and meaning, and shall indemnify and save harmless the City of Moreno Valley, its officers, agents and employees, as therein stipulated, then this obligation shall become null and void; otherwise it shall be and remain in full force and effect. In the event suit is brought upon this bond by the City and judgement is recovered, the Surety shall pay all costs incurred by the City in such suit, including a reasonable attorney fee to be fixed by the court.

Contractor and Surety agree that this Faithful Performance Bond shall not be considered a part of the Agreement between Contractor and the City ("Agreement"). Contractor and Surety further agree that this Faithful Performance Bond is a separate obligation of the Contractor and its Surety, and that any attorneys' fee provision contained in this Faithful Performance Bond shall not apply to the Agreement. In the event there is any litigation between the parties arising from the breach of the Agreement, each party will bear its own attorneys' fees in the litigation.

The Surety hereby stipulates and agrees that no change, extension of time, alteration, or addition to the terms of the Contract Documents or to the Work to be performed thereunder, or the Provisions accompanying the same shall in any way affect its obligations on this bond, and it does hereby waive notice of any such change, extension of time, alteration or addition to the terms of the Contract Documents or to the Work or the Provisions.

(SIGNATURE PAGE FOLLOWS)

BOND NO. _____

IN WITNESS WHEREOF, we have hereunto set our hands, and seals on this _____ day of _____ 20____.

CONTRACTOR (Principal)	SURETY
Contractor Name: _____	Name: _____
Address: _____	Address: _____
_____	_____
Telephone No.: _____	Telephone No.: _____
Print Name: _____	Print Name: _____ Attorney-in-Fact
Signature: _____	Signature: _____

Approved as to Form this

_____ day of _____20___

_____
City Attorney
City of Moreno Valley

NOTE:

- **The bond shall be executed by a California admitted surety insurer (CCP 995.311).**
- **The bond shall include an attached Notary Certificate for the Attorney-in-Fact.**
- **The bond shall include an attached Notary Certificate for the Bidder.**
- **The bond shall include an attached original Power of Attorney only authorizing the Attorney-in-Fact to act for the Surety.**
- **The bond shall include the address at which the Principal (Bidder) and Surety may be served with notices, papers and other documents.**
- **The Bidder's and Surety's corporate seal may be affixed hereto.**

CALIFORNIA ALL-PURPOSE CERTIFICATE OF ACKNOWLEDGMENT

SAMPLE

State of California

County of _____

On _____ before me, _____,
(Here insert name and title of the officer)

personally appeared _____,

who proved to me on the basis of satisfactory evidence to be the person(s) whose name(s) is/are subscribed to the within instrument and acknowledgement to me that he/she they executed the same in his/her/their authorized capacity(ies), and that by his/her/their signature(s) on the instrument the person(s), or the entity upon behalf of which the person(s) acted, executed the instrument.

I certify under PENALTY OF PERJURY under the laws of the State of California that the foregoing paragraph is true and correct.

WITNESS my hand and official seal.

_____ (Notary Seal)
Signature of Notary Public

DESCRIPTION OF THE ATTACHED DOCUMENT

FAITHFUL PERFORMANCE BOND SIGNATURE PAGE
(Title or description of attached document)

_____
(Title or description of attached document continued)

Number of Pages _____

Document Date _____

_____
Additional Information

CAPACITY CLAIMED BY THE SIGNER

- ☐ Individual(s)
- ☐ Corporate Officer

_____
(Title)

- ☐ Partner (s)
- ☐ Attorney-in-Fact
- ☐ Other _____

ADDITIONAL OPTIONAL INFORMATION

INSTRUCTIONS FOR COMPLETING THIS FORM

Any acknowledgment completed in California must contain verbiage exactly as appears above in the notary section or a separate acknowledgment form must be property completed and attached to that document. The only exception is if a document is recorded outside of California. In such instances, any alternative acknowledgment verbiage as may be printed on such a document so long as the verbiage does not require the notary to do something that is illegal for a notary in California (i.e. certifying the authorized capacity of the signer). Please check the document carefully for proper notarial wording and attach this form if required.

- State and County information must be the State and County where the document signer(s) personally appeared before the notary public for acknowledgment.
- Date of notarization must be the date that the signer(s) personally appeared which must also be the same date the acknowledgment is completed.
- The notary public must print his or her name as it appears within his or her commission followed by a comma and then your title (notary public).
- Print the name(s) of document signer(s) who personally appear at the time of notarization.
- Indicate the correct singular or plural forms by crossing off incorrect forms (i.e. ~~he~~/she/~~they~~, is/~~are~~) or circling the correct forms. Failure to correctly indicate this information may lead to rejection of document recording.
- The notary seal impression must be clear and photographically reproducible. Impression must not cover text or lines. If seal impression smudges, re-seal if a sufficient area permits, otherwise complete a different acknowledgment form.
- Signature of the notary public must match the signature on file with the office of the county clerk.
  - ❖ Additional information is not required but could help to ensure this acknowledgment is not misused or attached to a different document.
  - ❖ Indicate title or type of attached document, number of pages and date.
  - ❖ Indicate the capacity claimed by the signer. If the claimed capacity is a corporate officer, indicate the title (i.e. CEO, CFO, Secretary).
- Securely attach this document to the signed document.

BOND NO. _____

PREMIUM $_____

LABOR AND MATERIALS PAYMENT BOND
(100% of Total Contract Amount)

CITY PROJECT NO. 801 0021
SR-60/MORENO BEACH DRIVE INTERCHANGE IMPROVEMENTS (PHASE 2)

KNOW ALL MEN AND WOMEN BY THESE PRESENTS

THAT WHEREAS, the City Council of the City of Moreno Valley, State of California, known as "City", has Principal hereinafter designated as "Contractor" and have entered into an Agreement whereby the Contractor agrees to construct or install and complete certain designated public improvements, which said Agreement, effective on the date signed by the City Manager, and identified as **City Project No. 801 0021** and Contract Documents are hereby referred to and made a part hereof; and

WHEREAS, said Contractor under the terms of said Contract Documents is required to furnish a bond to secure the payment of claims of laborers, mechanics, materialmen, and other persons, as provided by law;

NOW, THEREFORE, we the undersigned Contractor and _____, as Surety are held and firmly bound unto the City of Moreno Valley, County of Riverside, in the penal sum of _____dollars, ($_____), lawful money of the United States, for which payment, well and truly to be made, we bind ourselves, our heirs, executors and administrators, successors and assigns, jointly and severally liable (CCP 995.320 (a)(1)), firmly by these presents.

THE CONDITION OF THIS OBLIGATION IS SUCH, that if said Contractor, his or her or its heirs, executors, administrator, successors or assigns, or subcontractors, shall fail to pay any of the persons described in the State of California Civil Code, Section 9100, or amounts due under the Unemployment Insurance Code with respect to work or labor performed by any such claimant, or any amounts required to be deducted, withheld, and paid over to the Franchise Tax Board from the wages of employees of the Contractor and his or her subcontractors, pursuant to Section 13020, of the Unemployment Insurance Code, with respect to such work and labor, that the Surety or Sureties herein will pay for the same in an amount not exceeding the sum specified in this bond, otherwise the above obligation shall be void. In the event suit is brought upon this bond by the City or other person entitled to bring such an action and judgment is recovered, the Surety shall pay all costs incurred by the City in such suit, including a reasonable attorney fee to be fixed by the court.

Contractor and Surety agree that this Labor and Materials Payment Bond shall not be considered a part of the Agreement between Contractor and the City ("Agreement"). Contractor and Surety further agree that this Labor and Materials Payment Bond is a separate obligation of the Contractor and its Surety, and that any attorneys' fee provision contained in this Labor and Materials Payment Bond shall not apply to the Agreement. In the event there is any litigation between the parties arising from the breach of the Agreement, each party will bear its own attorneys' fees in the litigation.
This bond shall inure to the benefit of any of the persons described in the State of California Civil Code Section 9100, to give a right of action to such persons or their assigns in any suit brought upon this bond.

(SIGNATURE PAGE FOLLOWS)

IN WITNESS WHEREOF, we have hereunto set our hands, and seals on this _____ day of _____ 20____.

CONTRACTOR (Principal)	SURETY
Contractor Name: _____	Name: _____
Address: _____	Address: _____
_____	_____
Telephone No.: _____	Telephone No.: _____
Print Name: _____	Print Name: _____ Attorney-in-Fact
Signature: _____	Signature: _____

Approved as to Form this

_____ day of _____20___

_____
City Attorney
City of Moreno Valley

NOTE:

- **The bond shall be executed by a California admitted surety insurer (CCP 995.311).**
- **The bond shall include an attached Notary Certificate for the Attorney-in-Fact.**
- **The bond shall include an attached Notary Certificate for the Bidder.**
- **The bond shall include an attached original Power of Attorney only authorizing the Attorney-in-Fact to act for the Surety.**
- **The bond shall include the address at which the Principal (Bidder) and Surety may be served with notices, papers and other documents.**
- **The Bidder's and Surety's corporate seal may be affixed hereto.**

CALIFORNIA ALL-PURPOSE CERTIFICATE OF ACKNOWLEDGMENT

SAMPLE

State of California

County of _____

On _____ before me, _____,
(Here insert name and title of the officer)

personally appeared _____,

who proved to me on the basis of satisfactory evidence to be the person(s) whose name(s) is/are subscribed to the within instrument and acknowledgement to me that he/she they executed the same in his/her/their authorized capacity(ies), and that by his/her/their signature(s) on the instrument the person(s), or the entity upon behalf of which the person(s) acted, executed the instrument.

I certify under PENALTY OF PERJURY under the laws of the State of California that the foregoing paragraph is true and correct.

WITNESS my hand and official seal.

_____ (Notary Seal)
Signature of Notary Public

DESCRIPTION OF THE ATTACHED DOCUMENT

LABOR AND MATERIALS PAYMENT BOND SIGNATURE PAGE
(Title or description of attached document)

_____
(Title or description of attached document continued)

Number of Pages _____

Document Date _____

_____
Additional Information

CAPACITY CLAIMED BY THE SIGNER

- ☐ Individual(s)
- ☐ Corporate Officer

_____
(Title)

- ☐ Partner (s)
- ☐ Attorney-in-Fact
- ☐ Other _____

ADDITIONAL OPTIONAL INFORMATION

COMPLETING THIS FORM

California must contain verbiage exactly as or a separate acknowledgment form must be to that document. The only exception is if a lifornia. In such instances, any alternative e printed on such a document so long as the to do something that is illegal for a notary in ted capacity of the signer). Please check the al wording and attach this form if required.

- State and County information must be the State and County where the document signer(s) personally appeared before the notary public for acknowledgment.
- Date of notarization must be the date that the signer(s) personally appeared which must also be the same date the acknowledgment is completed.
- The notary public must print his or her name as it appears within his or her commission followed by a comma and then your title (notary public).
- Print the name(s) of document signer(s) who personally appear at the time of notarization.
- Indicate the correct singular or plural forms by crossing off incorrect forms (i.e. ~~he~~/she/~~they~~, is/~~are~~) or circling the correct forms. Failure to correctly indicate this information may lead to rejection of document recording.
- The notary seal impression must be clear and photographically reproducible. Impression must not cover text or lines. If seal impression smudges, re-seal if a sufficient area permits, otherwise complete a different acknowledgment form.
- Signature of the notary public must match the signature on file with the office of the county clerk.
  - ❖ Additional information is not required but could help to ensure this acknowledgment is not misused or attached to a different document.
  - ❖ Indicate title or type of attached document, number of pages and date.
  - ❖ Indicate the capacity claimed by the signer. If the claimed capacity is a corporate officer, indicate the title (i.e. CEO, CFO, Secretary).
- Securely attach this document to the signed document.

CITY OF MORENO VALLEY
SUPPLEMENTARY GENERAL CONDITIONS

The following provisions, pursuant to 44 Code of Federal Regulations, Part 13, Subpart C, Section 13.36, as it may be amended from time to time, are included in the Agreement and are required to be included in all subcontracts entered into by CONTRACTOR for work pursuant to the Agreement, unless otherwise expressly provided herein. These provisions supersede any conflicting provisions in the General Conditions and shall take precedence over the General Conditions for purposes of interpretation of the General Conditions. These provisions do not otherwise modify or replace General Conditions not in direct conflict with these provisions. Definitions used in these provisions are as contained in the General Conditions.

(1) CONTRACTOR shall be subject to the administrative, contractual, and legal remedies provided in the General Conditions in the event CONTRACTOR violates or breaches terms of the Agreement.

(2) CITY may terminate the Agreement for cause or for convenience, and CONTRACTOR may terminate the Agreement, as provided the General Conditions.

(3) CONTRACTOR shall comply with Executive Order 11246 of September 24, 1965, entitled Equal Employment Opportunity, as amended by Executive Order 11375 of October 13, 1967, and as supplemented in Department of Labor regulations (41 CFR chapter 60). (All construction contracts awarded in excess of $10,000 by CITY and/or subcontracts in excess of $10,000 entered into by CONTRACTOR.)

(4) CONTRACTOR shall comply with the Copeland Anti-Kickback Act (18 U.S.C. 874) as supplemented in Department of Labor regulations (29 CFR Part 3) (All contracts and subcontracts for construction or repair.)

(5) CONTRACTOR shall comply with the Davis-Bacon Act (40 U.S.C. 276a to 276a7) as supplemented by Department of Labor regulations (29 CFR Part 5).

(6) CONTRACTOR shall comply with Sections 103 and 107 of the Contract Work Hours and Safety Standards Act (40 U.S.C. *327330*) as supplemented by Department of Labor regulations (29 CFR Part 5).

(7) CONTRACTOR shall observe CITY requirements and regulations pertaining to reporting included in the General Conditions.

(8) Patent rights with respect to any discovery or invention which arises or is developed in the course of or under the Agreement shall be retained by the CITY.

(9) Copyrights and rights in data developed in the course of or under the Agreement shall be the property of the CITY. FEMA/CalOES reserve a royalty-free, nonexclusive, irrevocable license to reproduce, publish or otherwise use or authorize to others to use for federal

purposes a copyright in any work developed under the Agreement and/or subcontracts for work pursuant to the Agreement.

(10) CONTRACTOR shall provide access by the City, the Federal grantor agency, the Comptroller General of the United States, or any of their duly authorized representatives to any books, documents, papers, and records of the contractor which are directly pertinent to that specific contract for the purpose of making audit, examination, excerpts, and transcriptions.

(11) CONTRACTOR shall retain all required records for three years after CITY makes final payments and all other pending matters relating to the Agreement are closed.

(12) CONTRACTOR shall comply with all applicable standards, orders, or requirements issued under section 306 of the Clean Air Act (42 U.S.C. *1857*(h)), section 508 of the Clean Water Act (33 U.S.C. 1368), Executive Order 11738, and Environmental Protection Agency regulations (40 CFR part 15). (This provision applies to contracts exceeding $100,000 and to subcontracts entered into pursuant to such contracts.)

(13) CONTRACTOR shall comply with mandatory standards and policies relating to energy efficiency which are contained in the State energy conservation plan issued in compliance with the Energy Policy and Conservation Act (Pub. L. 94163, 89 Stat. 871).

CONTRACT PROVISIONS FOR NON-FEDERAL ENTITY CONTRACTS UNDER FEDERAL AWARDS

APPENDIX II TO PART 200—CONTRACT PROVISIONS FOR NON-FEDERAL ENTITY CONTRACTS UNDER FEDERAL AWARDS

In addition to other provisions required by the Federal agency or non-Federal entity, all contracts made by the non-Federal entity under the Federal award must contain provisions covering the following, as applicable.

(A) Contracts for more than the simplified acquisition threshold currently set at $150,000, which is the inflation adjusted amount determined by the Civilian Agency Acquisition Council and the Defense Acquisition Regulations Council (Councils) as authorized by 41 U.S.C. 1908, must address administrative, contractual, or legal remedies in instances where contractors violate or breach contract terms, and provide for such sanctions and penalties as appropriate.

(B) All contracts in excess of $10,000 must address termination for cause and for convenience by the non-Federal entity including the manner by which it will be effected and the basis for settlement.

(C) Equal Employment Opportunity. Except as otherwise provided under 41 CFR Part 60, all contracts that meet the definition of ''federally assisted construction con- tract'' in 41 CFR Part 60–1.3 must include the equal opportunity clause provided under 41 CFR 60–1.4(b), in accordance with Executive Order 11246, ''Equal Employment Opportunity'' (30 FR 12319, 12935, 3 CFR Part, 1964– 1965 Comp., p. 339), as amended by Executive Order 11375, ''Amending Executive Order 11246 Relating to Equal Employment Opportunity,'' and implementing regulations at 41 CFR part 60, ''Office of Federal Contract Compliance Programs, Equal Employment Opportunity, Department of Labor.''

(D) Davis-Bacon Act, as amended (40 U.S.C. 3141–3148). When required by Federal program legislation, all prime construction contracts in excess of $2,000 awarded by non-Federal entities must include a provision for compliance with the Davis-Bacon Act (40 U.S.C. 3141–3144, and 3146–3148) as supplemented by Department of Labor regulations (29 CFR Part 5, ''Labor Standards Provisions Applicable to Contracts Covering Federally Financed and Assisted Construction''). In accordance with the statute, contractors must be required to pay wages to laborers and mechanics at a rate not less than the prevailing wages specified in a wage determination made by the Secretary of Labor. In addition, contractors must be required to pay wages not less than once a week. The non-Federal entity must place a copy of the current prevailing wage determination issued by the Department of Labor in each solicitation. The decision to award a contract or subcontract must be conditioned upon the acceptance of the wage determination. The non-Federal entity must report all suspected or reported violations to the Federal awarding agency. The contracts must also include a provision for compliance with the Copeland ''Anti- Kickback'' Act (40 U.S.C. 3145), as supplemented by Department of Labor regulations (29 CFR Part 3, ''Contractors and Sub- contractors on Public Building or Public Work Financed in Whole or in Part by Loans or Grants from the United States''). The Act provides that each contractor or subrecipient must be prohibited from inducing, by any means, any person employed in the construction, completion, or repair of public work, to give up any part of the compensation to which he or she is otherwise entitled. The non-Federal entity must report all suspected or reported violations to the Federal awarding agency.

(E) Contract Work Hours and Safety Standards Act (40 U.S.C. 3701–3708). Where applicable, all contracts awarded by the non- Federal entity in excess of $100,000 that involve the employment of mechanics or laborers must include a provision for compliance with 40 U.S.C. 3702 and 3704, as supplemented by Department of Labor regulations (29 CFR Part 5). Under 40 U.S.C. 3702 of the Act, each contractor must be required to compute the wages of every mechanic

and laborer on the basis of a standard work week of 40 hours. Work in excess of the standard work week is permissible provided that the worker is compensated at a rate of not less than one and a half times the basic rate of pay for all hours worked in excess of 40 hours in the work week. The requirements of 40 U.S.C. 3704 are applicable to construction work and provide that no laborer or mechanic must be required to work in surroundings or under working conditions which are unsanitary, hazardous or dangerous. These requirements do not apply to the purchases of supplies or materials or articles ordinarily available on the open market, or contracts for transportation or transmission of intelligence.

(F) Rights to Inventions Made Under a Contract or Agreement. If the Federal award meets the definition of ''funding agreement'' under 37 CFR § 401.2 (a) and the recipient or subrecipient wishes to enter into a contract with a small business firm or nonprofit organization regarding the substitution of par- ties, assignment or performance of experimental, developmental, or research work under that ''funding agreement,'' the recipient or subrecipient must comply with the requirements of 37 CFR Part 401, ''Rights to Inventions Made by Nonprofit Organizations and Small Business Firms Under Government Grants, Contracts and Cooperative Agreements,'' and any implementing regulations issued by the awarding agency.

(G) Clean Air Act (42 U.S.C. 7401–7671q.) and the Federal Water Pollution Control Act (33 U.S.C. 1251–1387), as amended—Contracts and subgrants of amounts in excess of $150,000 must contain a provision that requires the non-Federal award to agree to comply with all applicable standards, orders or regulations issued pursuant to the Clean Air Act (42 U.S.C. 7401–7671q) and the Federal Water Pollution Control Act as amended (33 U.S.C. 1251–1387). Violations must be reported to the Federal awarding agency and the Regional Office of the Environmental Protection Agency (EPA).

(H) Mandatory standards and policies relating to energy efficiency which are contained in the state energy conservation plan issued in compliance with the Energy Policy and Conservation Act (42 U.S.C. 6201).

(I) Debarment and Suspension (Executive Orders 12549 and 12689)—A contract award (see 2 CFR 180.220) must not be made to par- ties listed on the governmentwide Excluded Parties List System in the System for Award Management (SAM), in accordance with the OMB guidelines at 2 CFR 180 that implement Executive Orders 12549 (3 CFR Part 1986 Comp., p. 189) and 12689 (3 CFR Part 1989 Comp., p. 235), ''Debarment and Suspension.'' The Excluded Parties List System in SAM contains the names of parties debarred, suspended, or otherwise excluded by agencies, as well as parties declared ineligible under statutory or regulatory authority other than Executive Order 12549.

(J) Byrd Anti-Lobbying Amendment (31 U.S.C. 1352)—Contractors that apply or bid for an award of $100,000 or more must file the required certification. Each tier certifies to the tier above that it will not and has not used Federal appropriated funds to pay any person or organization for influencing or at- tempting to influence an officer or employee of any agency, a member of Congress, officer or employee of Congress, or an employee of a member of Congress in connection with obtaining any Federal contract, grant or any other award covered by 31 U.S.C. 1352. Each tier must also disclose any lobbying with non-Federal funds that takes place in connection with obtaining any Federal award. Such disclosures are forwarded from tier to tier up to the non-Federal award.

(K) See § 200.322 Procurement of recovered materials.

FEDERAL WAGE DETERMINATION (RATES)

"General Decision Number: CA20210025 01/22/2021

Superseded General Decision Number: CA20200025

State: California

Construction Types: Building, Heavy (Heavy and Dredging) and Highway

County: Riverside County in California.

BUILDING CONSTRUCTION PROJECTS; DREDGING PROJECTS (does not include hopper dredge work); HEAVY CONSTRUCTION PROJECTS (does not include water well drilling); HIGHWAY CONSTRUCTION PROJECTS

Note: Under Executive Order (EO) 13658, an hourly minimum wage of $10.95 for calendar year 2021 applies to all contracts subject to the Davis-Bacon Act for which the contract is awarded (and any solicitation was issued) on or after January 1, 2015. If this contract is covered by the EO, the contractor must pay all workers in any classification listed on this wage determination at least $10.95 per hour (or the applicable wage rate listed on this wage determination, if it is higher) for all hours spent performing on the contract in calendar year 2021. If this contract is covered by the EO and a classification considered necessary for performance of work on the contract does not appear on this wage determination, the contractor must pay workers in that classification at least the wage rate determined through the conformance process set forth in 29 CFR 5.5(a)(1)(ii) (or the EO minimum wage rate,if it is higher than the conformed wage rate). The EO minimum wage rate will be adjusted annually. Please note that this EO applies to the above-mentioned types of contracts entered into by the federal government that are subject to the Davis-Bacon Act itself, but it does not apply to contracts subject only to the Davis-Bacon Related Acts, including those set forth at 29 CFR 5.1(a)(2)-(60). Additional information on contractor requirements and worker protections under the EO is available at www.dol.gov/whd/govcontracts.

Modification Number	Publication Date
0	01/01/2021
1	01/08/2021
2	01/22/2021

ASBE0005-002 07/06/2020

	Rates	Fringes
Asbestos Workers/Insulator (Includes the application of all insulating materials, protective coverings, coatings, and finishes to all types of mechanical systems)	$ 45.39	23.74
Fire Stop Technician (Application of Firestopping Materials for wall openings and penetrations in walls, floors, ceilings and curtain walls)	$ 28.92	18.73

ASBE0005-004 07/01/2019

	Rates	Fringes
Asbestos Removal worker/hazardous material handler (Includes preparation, wetting, stripping, removal, scrapping, vacuuming, bagging and disposing of all insulation materials from mechanical systems, whether they contain asbestos or not)	$ 20.63	12.17

BOIL0092-003 03/01/2018

	Rates	Fringes
BOILERMAKER	$ 44.07	33.52

---

* BRCA0004-011 05/01/2020

	Rates	Fringes
BRICKLAYER; MARBLE SETTER	$ 41.48	18.63

*The wage scale for prevailing wage projects performed in Blythe, China lake, Death Valley, Fort Irwin, Twenty-Nine Palms, Needles and 1-15 corridor (Barstow to the Nevada State Line) will be Three Dollars ($3.00) above the standard San Bernardino/Riverside County hourly wage rate

---

BRCA0018-004 06/01/2019

	Rates	Fringes
MARBLE FINISHER	$ 33.43	14.11
TILE FINISHER	$ 28.23	12.65
TILE LAYER	$ 40.07	18.36

BRCA0018-010 09/01/2020

	Rates	Fringes
TERRAZZO FINISHER	$ 33.66	14.20
TERRAZZO WORKER/SETTER	$ 41.60	14.73

CARP0409-001 07/01/2018

	Rates	Fringes
CARPENTER		
(1) Carpenter, Cabinet Installer, Insulation Installer, Hardwood Floor Worker and acoustical installer	$ 41.84	19.17
(2) Millwright	$ 42.91	19.17
(3) Piledrivermen/Derrick Bargeman, Bridge or Dock Carpenter, Heavy Framer, Rock Bargeman or Scowman, Rockslinger, Shingler		

(Commercial)	$ 42.54	19.17
(4) Pneumatic Nailer, Power Stapler	$ 40.09	19.17
(5) Sawfiler	$ 39.83	19.17
(6) Scaffold Builder	$ 31.60	19.17
(7) Table Power Saw Operator	$ 40.93	19.17

FOOTNOTE: Work of forming in the construction of open cut sewers or storm drains, on operations in which horizontal lagging is used in conjunction with steel H-Beams driven or placed in pre- drilled holes, for that portion of a lagged trench against which concrete is poured, namely, as a substitute for back forms (which work is performed by piledrivers): $0.13 per hour additional.

CARP0409-002 07/01/2016

	Rates	Fringes
Diver		
(1) Wet	$ 712.48	17.03
(2) Standby	$ 356.24	17.03
(3) Tender	$ 348.24	17.03
(4) Assistant Tender	$ 324.24	17.03

Amounts in ""Rates' column are per day

CARP0409-005 07/01/2015

	Rates	Fringes
Drywall		
DRYWALL INSTALLER/LATHER	$ 37.35	11.08
STOCKER/SCRAPPER	$ 10.00	7.17

CARP0409-008 08/01/2010

	Rates	Fringes
Modular Furniture Installer	$ 17.00	7.41

---

* ELEC0440-001 12/28/2020

	Rates	Fringes
ELECTRICIAN		
INSIDE ELECTRICIAN	$ 46.75	3%+23.67
INTELLIGENT TRANSPORTATION SYSTEMS		
Electrician	$ 36.99	3%+23.18
Technician	$ 27.75	3%+23.18

ZONE PAY: Zone A: Free travel zone for all contractors performing work in Zone A.
Zone B:Any work performed in Zone (B) shall add $12.00 per hour to the current wage scale. Zone (B) shall be the area from the eastern perimeter of Zone (A) to a line which runs north and south begininng at Little Morongo Canyon (San Bernardino/Riverside County Line), Southeast along the Coachella Tunnels, Colorado River Aqueduct and Mecca Tunnels to Pinkham Wash then South to Box Canyon Road, then southwest along Box Canyon Road to Highway 195 west onto 195 south to Highway 86 to Riverside/Imperial County Line.

ELEC1245-001 06/01/2020

	Rates	Fringes
LINE CONSTRUCTION		
(1) Lineman; Cable splicer	$ 59.14	20.78
(2) Equipment specialist (operates crawler tractors, commercial motor vehicles, backhoes, trenchers, cranes (50 tons and below), overhead & underground distribution line equipment)	$ 47.24	19.59
(3) Groundman	$ 36.12	19.19
(4) Powderman	$ 51.87	18.79

HOLIDAYS: New Year's Day, M.L. King Day, Memorial Day, Independence Day, Labor Day, Veterans Day, Thanksgiving Day and day after Thanksgiving, Christmas Day

---

ELEV0018-001 01/01/2021

	Rates	Fringes
ELEVATOR MECHANIC	$ 59.32	35.825+a+b

FOOTNOTE:
a. PAID VACATION: Employer contributes 8% of regular hourly rate as vacation pay credit for employees with more than 5 years of service, and 6% for 6 months to 5 years of service.
b. PAID HOLIDAYS: New Year's Day, Memorial Day, Independence Day, Labor Day, Veterans' Day, Thanksgiving Day, Friday after Thanksgiving, and Christmas Day.

ENGI0012-003 07/01/2020

	Rates	Fringes
OPERATOR: Power Equipment (All Other Work)		
GROUP 1	$ 48.25	27.20
GROUP 2	$ 49.03	27.20
GROUP 3	$ 49.32	27.20
GROUP 4	$ 50.81	27.20
GROUP 5	$ 48.96	25.25
GROUP 6	$ 51.03	27.20
GROUP 8	$ 51.14	27.20
GROUP 9	$ 49.29	25.25
GROUP 10	$ 51.26	27.20
GROUP 11	$ 49.41	25.25
GROUP 12	$ 51.43	27.20
GROUP 13	$ 51.53	27.20
GROUP 14	$ 51.56	27.20
GROUP 15	$ 51.64	27.20
GROUP 16	$ 51.76	27.20
GROUP 17	$ 51.93	27.20
GROUP 18	$ 52.03	27.20
GROUP 19	$ 52.14	27.20
GROUP 20	$ 52.26	27.20
GROUP 21	$ 52.43	27.20

GROUP 22	$ 52.53	27.20
GROUP 23	$ 52.64	27.20
GROUP 24	$ 52.76	27.20
GROUP 25	$ 52.93	27.20
OPERATOR: Power Equipment (Cranes, Piledriving & Hoisting)		
GROUP 1	$ 49.60	27.20
GROUP 2	$ 50.38	27.20
GROUP 3	$ 50.67	27.20
GROUP 4	$ 50.81	27.20
GROUP 5	$ 51.03	27.20
GROUP 6	$ 51.14	27.20
GROUP 7	$ 51.26	27.20
GROUP 8	$ 51.43	27.20
GROUP 9	$ 51.60	27.20
GROUP 10	$ 52.60	27.20
GROUP 11	$ 53.60	27.20
GROUP 12	$ 54.60	27.20
GROUP 13	$ 55.60	27.20
OPERATOR: Power Equipment (Tunnel Work)		
GROUP 1	$ 50.10	27.20
GROUP 2	$ 50.88	27.20
GROUP 3	$ 51.17	27.20
GROUP 4	$ 51.31	27.20
GROUP 5	$ 51.53	27.20
GROUP 6	$ 51.64	27.20
GROUP 7	$ 51.76	27.20

PREMIUM PAY:
$3.75 per hour shall be paid on all Power Equipment Operator work on the followng Military Bases: China Lake Naval Reserve, Vandenberg AFB, Point Arguello, Seely Naval Base, Fort Irwin, Nebo Annex Marine Base, Marine Corp Logistics Base Yermo, Edwards AFB, 29 Palms Marine Base and Camp Pendleton

Workers required to suit up and work in a hazardous material environment: $2.00 per hour additional. Combination mixer and compressor operator on gunite work shall be classified as a concrete mobile mixer operator.

SEE ZONE DEFINITIONS AFTER CLASSIFICATIONS

POWER EQUIPMENT OPERATORS CLASSIFICATIONS

GROUP 1: Bargeman; Brakeman; Compressor operator; Ditch Witch, with seat or similar type equipment; Elevator operator-inside; Engineer Oiler; Forklift operator (includes loed, lull or similar types under 5 tons; Generator operator; Generator, pump or compressor plant operator; Pump operator; Signalman; Switchman

GROUP 2: Asphalt-rubber plant operator (nurse tank operator); Concrete mixer operator-skip type; Conveyor operator; Fireman; Forklift operator (includes loed, lull or similar types over 5 tons; Hydrostatic pump operator; oiler crusher (asphalt or concrete plant); Petromat laydown machine; PJU side dum jack; Screening and conveyor machine operator (or similar types); Skiploader (wheel type up to 3/4 yd. without attachment); Tar pot fireman; Temporary heating plant operator; Trenching machine oiler

GROUP 3: Asphalt-rubber blend operator; Bobcat or similar

type (Skid steer); Equipment greaser (rack); Ford Ferguson (with dragtype attachments); Helicopter radioman (ground); Stationary pipe wrapping and cleaning machine operator

GROUP 4: Asphalt plant fireman; Backhoe operator (mini-max or similar type); Boring machine operator; Boxman or mixerman (asphalt or concrete); Chip spreading machine operator; Concrete cleaning decontamination machine operator; Concrete Pump Operator (small portable); Drilling machine operator, small auger types (Texoma super economatic or similar types - Hughes 100 or 200 or similar types - drilling depth of 30' maximum); Equipment greaser (grease truck); Guard rail post driver operator; Highline cableway signalman; Hydra-hammer-aero stomper; Micro Tunneling (above ground tunnel); Power concrete curing machine operator; Power concrete saw operator; Power-driven jumbo form setter operator; Power sweeper operator; Rock Wheel Saw/Trencher; Roller operator (compacting); Screed operator (asphalt or concrete); Trenching machine operator (up to 6 ft.); Vacuum or much truck

GROUP 5: Equipment Greaser (Grease Truck/Multi Shift).

GROUP 6: Articulating material hauler; Asphalt plant engineer; Batch plant operator; Bit sharpener; Concrete joint machine operator (canal and similar type); Concrete planer operator; Dandy digger; Deck engine operator; Derrickman (oilfield type); Drilling machine operator, bucket or auger types (Calweld 100 bucket or similar types - Watson 1000 auger or similar types - Texoma 330, 500 or 600 auger or similar types - drilling depth of 45' maximum); Drilling machine operator; Hydrographic seeder machine operator (straw, pulp or seed), Jackson track maintainer, or similar type; Kalamazoo Switch tamper, or similar type; Machine tool operator; Maginnis internal full slab vibrator, Mechanical berm, curb or gutter(concrete or asphalt); Mechanical finisher operator (concrete, Clary-Johnson-Bidwell or similar); Micro tunnel system (below ground); Pavement breaker operator (truck mounted); Road oil mixing machine operator; Roller operator (asphalt or finish), rubber-tired earth moving equipment (single engine, up to and including 25 yds. struck); Self-propelled tar pipelining machine operator; Skiploader operator (crawler and wheel type, over 3/4 yd. and up to and including 1-1/2 yds.); Slip form pump operator (power driven hydraulic lifting device for concrete forms); Tractor operator-bulldozer, tamper-scraper (single engine, up to 100 h.p. flywheel and similar types, up to and including D-5 and similar types); Tugger hoist operator (1 drum); Ultra high pressure waterjet cutting tool system operator; Vacuum blasting machine operator

GROUP 8: Asphalt or concrete spreading operator (tamping or finishing); Asphalt paving machine operator (Barber Greene or similar type); Asphalt-rubber distribution operator; Backhoe operator (up to and including 3/4 yd.), small ford, Case or similar; Cast-in-place pipe laying machine operator; Combination mixer and compressor operator (gunite work); Compactor operator (self-propelled); Concrete mixer operator (paving); Crushing plant operator; Drill Doctor; Drilling machine operator, Bucket or auger types (Calweld 150 bucket or similar types - Watson 1500, 2000 2500 auger or similar types - Texoma 700, 800 auger or similar types - drilling depth of 60' maximum); Elevating grader operator; Grade checker; Gradall operator; Grouting machine operator;

Heavy-duty repairman; Heavy equipment robotics operator; Kalamazoo balliste regulator or similar type; Kolman belt loader and similar type; Le Tourneau blob compactor or similar type; Loader operator (Athey, Euclid, Sierra and similar types); Mobark Chipper or similar; Ozzie padder or similar types; P.C. slot saw; Pneumatic concrete placing machine operator (Hackley-Presswell or similar type); Pumpcrete gun operator; Rock Drill or similar types; Rotary drill operator (excluding caisson type); Rubber-tired earth-moving equipment operator (single engine, caterpillar, Euclid, Athey Wagon and similar types with any and all attachments over 25 yds. up to and including 50 cu. yds. struck); Rubber-tired earth-moving equipment operator (multiple engine up to and including 25 yds. struck); Rubber-tired scraper operator (self-loading paddle wheel type-John Deere, 1040 and similar single unit); Self-propelled curb and gutter machine operator; Shuttle buggy; Skiploader operator (crawler and wheel type over 1-1/2 yds. up to and including 6-1/2 yds.); Soil remediation plant operator; Surface heaters and planer operator; Tractor compressor drill combination operator; Tractor operator (any type larger than D-5 - 100 flywheel h.p. and over, or similar-bulldozer, tamper, scraper and push tractor single engine); Tractor operator (boom attachments), Traveling pipe wrapping, cleaning and bendng machine operator; Trenching machine operator (over 6 ft. depth capacity, manufacturer's rating); trenching Machine with Road Miner attachment (over 6 ft depth capacity): Ultra high pressure waterjet cutting tool system mechanic; Water pull (compaction) operator

GROUP 9: Heavy Duty Repairman

GROUP 10: Drilling machine operator, Bucket or auger types (Calweld 200 B bucket or similar types-Watson 3000 or 5000 auger or similar types-Texoma 900 auger or similar types-drilling depth of 105' maximum); Dual drum mixer, dynamic compactor LDC350 (or similar types); Monorail locomotive operator (diesel, gas or electric); Motor patrol-blade operator (single engine); Multiple engine tractor operator (Euclid and similar type-except Quad 9 cat.); Rubber-tired earth-moving equipment operator (single engine, over 50 yds. struck); Pneumatic pipe ramming tool and similar types; Prestressed wrapping machine operator; Rubber-tired earth-moving equipment operator (single engine, over 50 yds. struck); Rubber tired earth moving equipment operator (multiple engine, Euclid, caterpillar and similar over 25 yds. and up to 50 yds. struck), Tower crane repairman; Tractor loader operator (crawler and wheel type over 6-1/2 yds.); Woods mixer operator (and similar Pugmill equipment)

GROUP 11: Heavy Duty Repairman - Welder Combination, Welder - Certified.

GROUP 12: Auto grader operator; Automatic slip form operator; Drilling machine operator, bucket or auger types (Calweld, auger 200 CA or similar types - Watson, auger 6000 or similar types - Hughes Super Duty, auger 200 or similar types - drilling depth of 175' maximum); Hoe ram or similar with compressor; Mass excavator operator less tha 750 cu. yards; Mechanical finishing machine operator; Mobile form traveler operator; Motor patrol operator (multi-engine); Pipe mobile machine operator; Rubber-tired earth- moving equipment operator (multiple engine, Euclid, Caterpillar

and similar type, over 50 cu. yds. struck); Rubber-tired self- loading scraper operator (paddle-wheel-auger type self-loading - two (2) or more units)

GROUP 13: Rubber-tired earth-moving equipment operator operating equipment with push-pull system (single engine, up to and including 25 yds. struck)

GROUP 14: Canal liner operator; Canal trimmer operator; Remote- control earth-moving equipment operator (operating a second piece of equipment: $1.00 per hour additional); Wheel excavator operator (over 750 cu. yds.)

GROUP 15: Rubber-tired earth-moving equipment operator, operating equipment with push-pull system (single engine, Caterpillar, Euclid, Athey Wagon and similar types with any and all attachments over 25 yds. and up to and including 50 yds. struck); Rubber-tired earth-moving equipment operator, operating equipment with push-pull system (multiple engine-up to and including 25 yds. struck)

GROUP 16: Rubber-tired earth-moving equipment operator, operating equipment with push-pull system (single engine, over 50 yds. struck); Rubber-tired earth-moving equipment operator, operating equipment with push-pull system (multiple engine, Euclid, Caterpillar and similar, over 25 yds. and up to 50 yds. struck)

GROUP 17: Rubber-tired earth-moving equipment operator, operating equipment with push-pull system (multiple engine, Euclid, Caterpillar and similar, over 50 cu. yds. struck); Tandem tractor operator (operating crawler type tractors in tandem - Quad 9 and similar type)

GROUP 18: Rubber-tired earth-moving equipment operator, operating in tandem (scrapers, belly dumps and similar types in any combination, excluding compaction units - single engine, up to and including 25 yds. struck)

GROUP 19: Rotex concrete belt operator (or similar types); Rubber-tired earth-moving equipment operator, operating in tandem (scrapers, belly dumps and similar types in any combination, excluding compaction units - single engine, Caterpillar, Euclid, Athey Wagon and similar types with any and all attachments over 25 yds.and up to and including 50 cu. yds. struck); Rubber-tired earth-moving equipment operator, operating in tandem (scrapers, belly dumps and similar types in any combination, excluding compaction units - multiple engine, up to and including 25 yds. struck)

GROUP 20: Rubber-tired earth-moving equipment operator, operating in tandem (scrapers, belly dumps and similar types in any combination, excluding compaction units - single engine, over 50 yds. struck); Rubber-tired earth-moving equipment operator, operating in tandem (scrapers, belly dumps, and similar types in any combination, excluding compaction units - multiple engine, Euclid, Caterpillar and similar, over 25 yds. and up to 50 yds. struck)

GROUP 21: Rubber-tired earth-moving equipment operator, operating in tandem (scrapers, belly dumps and similar types in any combination, excluding compaction units - multiple engine, Euclid, Caterpillar and similar type, over 50 cu. yds. struck)

GROUP 22: Rubber-tired earth-moving equipment operator, operating equipment with the tandem push-pull system (single engine, up to and including 25 yds. struck)

GROUP 23: Rubber-tired earth-moving equipment operator, operating equipment with the tandem push-pull system (single engine, Caterpillar, Euclid, Athey Wagon and similar types with any and all attachments over 25 yds. and up to and including 50 yds. struck); Rubber-tired earth-moving equipment operator, operating with the tandem push-pull system (multiple engine, up to and including 25 yds. struck)

GROUP 24: Rubber-tired earth-moving equipment operator, operating equipment with the tandem push-pull system (single engine, over 50 yds. struck); Rubber-tired earth-moving equipment operator, operating equipment with the tandem push-pull system (multiple engine, Euclid, Caterpillar and similar, over 25 yds. and up to 50 yds. struck)

GROUP 25: Concrete pump operator-truck mounted; Rubber-tired earth-moving equipment operator, operating equipment with the tandem push-pull system (multiple engine, Euclid, Caterpillar and similar type, over 50 cu. yds. struck)

CRANES, PILEDRIVING AND HOISTING EQUIPMENT CLASSIFICATIONS

GROUP 1: Engineer oiler; Fork lift operator (includes loed, lull or similar types)

GROUP 2: Truck crane oiler

GROUP 3: A-frame or winch truck operator; Ross carrier operator (jobsite)

GROUP 4: Bridge-type unloader and turntable operator; Helicopter hoist operator

GROUP 5: Hydraulic boom truck; Stinger crane (Austin-Western or similar type); Tugger hoist operator (1 drum)

GROUP 6: Bridge crane operator; Cretor crane operator; Hoist operator (Chicago boom and similar type); Lift mobile operator; Lift slab machine operator (Vagtborg and similar types); Material hoist and/or manlift operator; Polar gantry crane operator; Self Climbing scaffold (or similar type); Shovel, backhoe, dragline, clamshell operator (over 3/4 yd. and up to 5 cu. yds. mrc); Tugger hoist operator

GROUP 7: Pedestal crane operator; Shovel, backhoe, dragline, clamshell operator (over 5 cu. yds. mrc); Tower crane repair; Tugger hoist operator (3 drum)

GROUP 8: Crane operator (up to and including 25 ton capacity); Crawler transporter operator; Derrick barge operator (up to and including 25 ton capacity); Hoist operator, stiff legs, Guy derrick or similar type (up to and including 25 ton capacity); Shovel, backhoe, dragline, clamshell operator (over 7 cu. yds., M.R.C.)

GROUP 9: Crane operator (over 25 tons and up to and including 50 tons mrc); Derrick barge operator (over 25 tons up to and including 50 tons mrc); Highline cableway operator;

Hoist operator, stiff legs, Guy derrick or similar type (over 25 tons up to and including 50 tons mrc); K-crane operator; Polar crane operator; Self erecting tower crane operator maximum lifting capacity ten tons

GROUP 10: Crane operator (over 50 tons and up to and including 100 tons mrc); Derrick barge operator (over 50 tons up to and including 100 tons mrc); Hoist operator, stiff legs, Guy derrick or similar type (over 50 tons up to and including 100 tons mrc), Mobile tower crane operator (over 50 tons, up to and including 100 tons M.R.C.); Tower crane operator and tower gantry

GROUP 11: Crane operator (over 100 tons and up to and including 200 tons mrc); Derrick barge operator (over 100 tons up to and including 200 tons mrc); Hoist operator, stiff legs, Guy derrick or similar type (over 100 tons up to and including 200 tons mrc); Mobile tower crane operator (over 100 tons up to and including 200 tons mrc)

GROUP 12: Crane operator (over 200 tons up to and including 300 tons mrc); Derrick barge operator (over 200 tons up to and including 300 tons mrc); Hoist operator, stiff legs, Guy derrick or similar type (over 200 tons, up to and including 300 tons mrc); Mobile tower crane operator (over 200 tons, up to and including 300 tons mrc)

GROUP 13: Crane operator (over 300 tons); Derrick barge operator (over 300 tons); Helicopter pilot; Hoist operator, stiff legs, Guy derrick or similar type (over 300 tons); Mobile tower crane operator (over 300 tons)

TUNNEL CLASSIFICATIONS

GROUP 1: Skiploader (wheel type up to 3/4 yd. without attachment)

GROUP 2: Power-driven jumbo form setter operator

GROUP 3: Dinkey locomotive or motorperson (up to and including 10 tons)

GROUP 4: Bit sharpener; Equipment greaser (grease truck); Slip form pump operator (power-driven hydraulic lifting device for concrete forms); Tugger hoist operator (1 drum); Tunnel locomotive operator (over 10 and up to and including 30 tons)

GROUP 5: Backhoe operator (up to and including 3/4 yd.); Small Ford, Case or similar; Drill doctor; Grouting machine operator; Heading shield operator; Heavy-duty repairperson; Loader operator (Athey, Euclid, Sierra and similar types); Mucking machine operator (1/4 yd., rubber-tired, rail or track type); Pneumatic concrete placing machine operator (Hackley-Presswell or similar type); Pneumatic heading shield (tunnel); Pumpcrete gun operator; Tractor compressor drill combination operator; Tugger hoist operator (2 drum); Tunnel locomotive operator (over 30 tons)

GROUP 6: Heavy Duty Repairman

GROUP 7: Tunnel mole boring machine operator

ENGINEERS ZONES

$1.00 additional per hour for all of IMPERIAL County and the portions of KERN, RIVERSIDE & SAN BERNARDINO Counties as defined below:

That area within the following Boundary: Begin in San Bernardino County, approximately 3 miles NE of the intersection of I-15 and the California State line at that point which is the NW corner of Section 1, T17N,m R14E, San Bernardino Meridian. Continue W in a straight line to that point which is the SW corner of the northwest quarter of Section 6, T27S, R42E, Mt. Diablo Meridian. Continue North to the intersection with the Inyo County Boundary at that point which is the NE corner of the western half of the northern quarter of Section 6, T25S, R42E, MDM. Continue W along the Inyo and San Bernardino County boundary until the intersection with Kern County, as that point which is the SE corner of Section 34, T24S, R40E, MDM. Continue W along the Inyo and Kern County boundary until the intersection with Tulare County, at that point which is the SW corner of the SE quarter of Section 32, T24S, R37E, MDM. Continue W along the Kern and Tulare County boundary, until that point which is the NW corner of T25S, R32E, MDM. Continue S following R32E lines to the NW corner of T31S, R32E, MDM. Continue W to the NW corner of T31S, R31E, MDM. Continue S to the SW corner of T32S, R31E, MDM. Continue W to SW corner of SE quarter of Section 34, T32S, R30E, MDM. Continue S to SW corner of T11N, R17W, SBM. Continue E along south boundary of T11N, SBM to SW corner of T11N, R7W, SBM. Continue S to SW corner of T9N, R7W, SBM. Continue E along south boundary of T9N, SBM to SW corner of T9N, R1E, SBM. Continue S along west boundary of R1E, SMB to Riverside County line at the SW corner of T1S, R1E, SBM. Continue E along south boundary of T1s, SBM (Riverside County Line) to SW corner of T1S, R10E, SBM. Continue S along west boundary of R10E, SBM to Imperial County line at the SW corner of T8S, R10E, SBM. Continue W along Imperial and Riverside county line to NW corner of T9S, R9E, SBM. Continue S along the boundary between Imperial and San Diego Counties, along the west edge of R9E, SBM to the south boundary of Imperial County/California state line. Follow the California state line west to Arizona state line, then north to Nevada state line, then continuing NW back to start at the point which is the NW corner of Section 1, T17N, R14E, SBM

$1.00 additional per hour for portions of SAN LUIS OBISPO, KERN, SANTA BARBARA & VENTURA as defined below:

That area within the following Boundary: Begin approximately 5 miles north of the community of Cholame, on the Monterey County and San Luis Obispo County boundary at the NW corner of T25S, R16E, Mt. Diablo Meridian. Continue south along the west side of R16E to the SW corner of T30S, R16E, MDM. Continue E to SW corner of T30S, R17E, MDM. Continue S to SW corner of T31S, R17E, MDM. Continue E to SW corner of T31S, R18E, MDM. Continue S along West side of R18E, MDM as it crosses into San Bernardino Meridian numbering area and becomes R30W. Follow the west side of R30W, SBM to the SW corner of T9N, R30W, SBM. Continue E along the south edge of T9N, SBM to the Santa Barbara County and Ventura County boundary at that point whch is the SW corner of Section 34.T9N, R24W, SBM, continue S along the Ventura County line to that point which is the SW corner of the SE quarter of Section 32, T7N, R24W, SBM. Continue E along the south edge of T7N, SBM to the SE corner to T7N, R21W, SBM. Continue N along East side of R21W, SBM to Ventura County and Kern County boundary at the NE corner of T8N, R21W. Continue W along the Ventura County and Kern County boundary to

the SE corner of T9N, R21W. Continue North along the East edge of R21W, SBM to the NE corner of T12N, R21W, SBM. Continue West along the north edge of T12N, SBM to the SE corner of T32S, R21E, MDM. [T12N SBM is a think strip between T11N SBM and T32S MDM]. Continue North along the East side of R21E, MDM to the Kings County and Kern County border at the NE corner of T25S, R21E, MDM, continue West along the Kings County and Kern County Boundary until the intersection of San Luis Obispo County. Continue west along the Kings County and San Luis Obispo County boundary until the intersection with Monterey County. Continue West along the Monterey County and San Luis Obispo County boundary to the beginning point at the NW corner of T25S, R16E, MDM.

$2.00 additional per hour for INYO and MONO Counties and the Northern portion of SAN BERNARDINO County as defined below:

That area within the following Boundary: Begin at the intersection of the northern boundary of Mono County and the California state line at the point which is the center of Section 17, T10N, R22E, Mt. Diablo Meridian. Continue S then SE along the entire western boundary of Mono County, until it reaches Inyo County at the point which is the NE corner of the Western half of the NW quarter of Section 2, T8S, R29E, MDM. Continue SSE along the entire western boundary of Inyo County, until the intersection with Kern County at the point which is the SW corner of the SE 1/4 of Section 32, T24S, R37E, MDM. Continue E along the Inyo and Kern County boundary until the intersection with San Bernardino County at that point which is the SE corner of section 34, T24S, R40E, MDM. Continue E along the Inyo and San Bernardino County boundary until the point which is the NE corner of the Western half of the NW quarter of Section 6, T25S, R42E, MDM. Continue S to that point which is the SW corner of the NW quarter of Section 6, T27S, R42E, MDM. Continue E in a straight line to the California and Nevada state border at the point which is the NW corner of Section 1, T17N, R14E, San Bernardino Meridian. Then continue NW along the state line to the starting point, which is the center of Section 18, T10N, R22E, MDM.

REMAINING AREA NOT DEFINED ABOVE RECIEVES BASE RATE

ENGI0012-004 08/01/2020

	Rates	Fringes
OPERATOR: Power Equipment (DREDGING)		
(1) Leverman	$ 56.40	30.00
(2) Dredge dozer	$ 50.43	30.00
(3) Deckmate	$ 50.32	30.00
(4) Winch operator (stern winch on dredge)	$ 49.77	30.00
(5) Fireman-Oiler, Deckhand, Bargeman, Leveehand	$ 49.23	30.00
(6) Barge Mate	$ 49.84	30.00

IRON0433-006 07/01/2020

	Rates	Fringes

IRONWORKER
Fence Erector.....$ 34.58 24.81
Ornamental, Reinforcing
and Structural.....$ 41.00 33.45

PREMIUM PAY:

$6.00 additional per hour at the following locations:

China Lake Naval Test Station, Chocolate Mountains Naval Reserve-Niland,
Edwards AFB, Fort Irwin Military Station, Fort Irwin Training Center-Goldstone, San Clemente Island, San Nicholas Island, Susanville Federal Prison, 29 Palms - Marine Corps, U.S. Marine Base - Barstow, U.S. Naval Air Facility - Sealey, Vandenberg AFB

$4.00 additional per hour at the following locations:

Army Defense Language Institute - Monterey, Fallon Air Base, Naval Post Graduate School - Monterey, Yermo Marine Corps Logistics Center

$2.00 additional per hour at the following locations:

Port Hueneme, Port Mugu, U.S. Coast Guard Station - Two Rock

LABO0300-005 03/01/2020

	Rates	Fringes
Asbestos Removal Laborer	$ 36.13	20.33

SCOPE OF WORK: Includes site mobilization, initial site cleanup, site preparation, removal of asbestos-containing material and toxic waste, encapsulation, enclosure and disposal of asbestos- containing materials and toxic waste by hand or with equipment or machinery; scaffolding, fabrication of temporary wooden barriers and assembly of decontamination stations.

LABO0345-001 07/01/2020

	Rates	Fringes
LABORER (GUNITE)		
GROUP 1	$ 45.05	19.62
GROUP 2	$ 44.10	19.62
GROUP 3	$ 40.56	19.62

FOOTNOTE: GUNITE PREMIUM PAY: Workers working from a Bosn'n's Chair or suspended from a rope or cable shall receive 40 cents per hour above the foregoing applicable classification rates. Workers doing gunite and/or shotcrete work in a tunnel shall receive 35 cents per hour above the foregoing applicable classification rates, paid on a portal-to-portal basis. Any work performed on, in or above any smoke stack, silo, storage elevator or similar type of structure, when such structure is in excess of 75'-0"" above base level and which work must be performed in whole or in part more than 75'-0"" above base level, that work performed above the 75'-0"" level shall be compensated for at 35 cents per hour above the applicable

classification wage rate.

GUNITE LABORER CLASSIFICATIONS

GROUP 1: Rodmen, Nozzlemen

GROUP 2: Gunmen

GROUP 3: Reboundmen

LABO1184-001 07/01/2020

	Rates	Fringes
Laborers: (HORIZONTAL DIRECTIONAL DRILLING)		
(1) Drilling Crew Laborer	$ 37.85	15.99
(2) Vehicle Operator/Hauler	$ 38.02	15.99
(3) Horizontal Directional Drill Operator	$ 39.87	15.99
(4) Electronic Tracking Locator	$ 41.87	15.99
Laborers: (STRIPING/SLURRY SEAL)		
GROUP 1	$ 39.06	19.01
GROUP 2	$ 40.36	19.01
GROUP 3	$ 42.37	19.01
GROUP 4	$ 44.11	19.01

LABORERS - STRIPING CLASSIFICATIONS

GROUP 1: Protective coating, pavement sealing, including repair and filling of cracks by any method on any surface in parking lots, game courts and playgrounds; carstops; operation of all related machinery and equipment; equipment repair technician

GROUP 2: Traffic surface abrasive blaster; pot tender - removal of all traffic lines and markings by any method (sandblasting, waterblasting, grinding, etc.) and preparation of surface for coatings. Traffic control person: controlling and directing traffic through both conventional and moving lane closures; operation of all related machinery and equipment

GROUP 3: Traffic delineating device applicator: Layout and application of pavement markers, delineating signs, rumble and traffic bars, adhesives, guide markers, other traffic delineating devices including traffic control. This category includes all traffic related surface preparation (sandblasting, waterblasting, grinding) as part of the application process. Traffic protective delineating system installer: removes, relocates, installs, permanently affixed roadside and parking delineation barricades, fencing, cable anchor, guard rail, reference signs, monument markers; operation of all related machinery and equipment; power broom sweeper

GROUP 4: Striper: layout and application of traffic stripes and markings; hot thermo plastic; tape traffic stripes and markings, including traffic control; operation of all related machinery and equipment

---

LABO1184-002 07/01/2020

	Rates	Fringes
LABORER (TUNNEL)		
GROUP 1	$ 42.54	21.04
GROUP 2	$ 42.86	21.04
GROUP 3	$ 43.32	21.04
GROUP 4	$ 44.01	21.04
LABORER		
GROUP 1	$ 36.39	21.04
GROUP 2	$ 36.94	21.04
GROUP 3	$ 37.49	21.04
GROUP 4	$ 39.04	21.04
GROUP 5	$ 39.39	21.04

LABORER CLASSIFICATIONS

GROUP 1: Cleaning and handling of panel forms; Concrete screeding for rough strike-off; Concrete, water curing; Demolition laborer, the cleaning of brick if performed by a worker performing any other phase of demolition work, and the cleaning of lumber; Fire watcher, limber, brush loader, piler and debris handler; Flag person; Gas, oil and/or water pipeline laborer; Laborer, asphalt-rubber material loader; Laborer, general or construction; Laborer, general clean-up; Laborer, landscaping; Laborer, jetting; Laborer, temporary water and air lines; Material hose operator (walls, slabs, floors and decks); Plugging, filling of shee bolt holes; Dry packing of concrete; Railroad maintenance, repair track person and road beds; Streetcar and railroad construction track laborers; Rigging and signaling; Scaler; Slip form raiser; Tar and mortar; Tool crib or tool house laborer; Traffic control by any method; Window cleaner; Wire mesh pulling - all concrete pouring operations

GROUP 2: Asphalt shoveler; Cement dumper (on 1 yd. or larger mixer and handling bulk cement); Cesspool digger and installer; Chucktender; Chute handler, pouring concrete, the handling of the chute from readymix trucks, such as walls, slabs, decks, floors, foundation, footings, curbs, gutters and sidewalks; Concrete curer, impervious membrane and form oiler; Cutting torch operator (demolition); Fine grader, highways and street paving, airport, runways and similar type heavy construction; Gas, oil and/or water pipeline wrapper - pot tender and form person; Guinea chaser; Headerboard person - asphalt; Laborer, packing rod steel and pans; Membrane vapor barrier installer; Power broom sweeper (small); Riprap stonepaver, placing stone or wet sacked concrete; Roto scraper and tiller; Sandblaster (pot tender); Septic tank digger and installer(lead); Tank scaler and cleaner; Tree climber, faller, chain saw operator, Pittsburgh chipper and similar type brush shredder; Underground laborer, including caisson bellower

GROUP 3: Buggymobile person; Concrete cutting torch; Concrete pile cutter; Driller, jackhammer, 2-1/2 ft. drill steel or longer; Dri-pak-it machine; Gas, oil and/or water pipeline wrapper, 6-in. pipe and over, by any method, inside and out; High scaler (including drilling of same); Hydro seeder and similar type; Impact wrench multi-plate; Kettle person, pot person and workers applying asphalt, lay-kold, creosote, lime caustic and similar type materials (""applying"" means applying, dipping, brushing or handling of such materials for pipe wrapping and waterproofing);

Operator of pneumatic, gas, electric tools, vibrating machine, pavement breaker, air blasting, come-alongs, and similar mechanical tools not separately classified herein; Pipelayer's backup person, coating, grouting, making of joints, sealing, caulking, diapering and including rubber gasket joints, pointing and any and all other services; Rock slinger; Rotary scarifier or multiple head concrete chipping scarifier; Steel headerboard and guideline setter; Tamper, Barko, Wacker and similar type; Trenching machine, hand-propelled

GROUP 4: Asphalt raker, lute person, ironer, asphalt dump person, and asphalt spreader boxes (all types); Concrete core cutter (walls, floors or ceilings), grinder or sander; Concrete saw person, cutting walls or flat work, scoring old or new concrete; Cribber, shorer, lagging, sheeting and trench bracing, hand-guided lagging hammer; Head rock slinger; Laborer, asphalt- rubber distributor boot person; Laser beam in connection with laborers' work; Oversize concrete vibrator operator, 70 lbs. and over; Pipelayer performing all services in the laying and installation of pipe from the point of receiving pipe in the ditch until completion of operation, including any and all forms of tubular material, whether pipe, metallic or non-metallic, conduit and any other stationary type of tubular device used for the conveying of any substance or element, whether water, sewage, solid gas, air, or other product whatsoever and without regard to the nature of material from which the tubular material is fabricated; No-joint pipe and stripping of same; Prefabricated manhole installer; Sandblaster (nozzle person), water blasting, Porta Shot-Blast

GROUP 5: Blaster powder, all work of loading holes, placing and blasting of all powder and explosives of whatever type, regardless of method used for such loading and placing; Driller: All power drills, excluding jackhammer, whether core, diamond, wagon, track, multiple unit, and any and all other types of mechanical drills without regard to the form of motive power; Toxic waste removal

TUNNEL LABORER CLASSIFICATIONS

GROUP 1: Batch plant laborer; Changehouse person; Dump person; Dump person (outside); Swamper (brake person and switch person on tunnel work); Tunnel materials handling person; Nipper; Pot tender, using mastic or other materials (for example, but not by way of limitation, shotcrete, etc.)

GROUP 2: Chucktender, cabletender; Loading and unloading agitator cars; Vibrator person, jack hammer, pneumatic tools (except driller); Bull gang mucker, track person; Concrete crew, including rodder and spreader

GROUP 3: Blaster, driller, powder person; Chemical grout jet person; Cherry picker person; Grout gun person; Grout mixer person; Grout pump person; Jackleg miner; Jumbo person; Kemper and other pneumatic concrete placer operator; Miner, tunnel (hand or machine); Nozzle person; Operating of troweling and/or grouting machines; Powder person (primer house); Primer person; Sandblaster; Shotcrete person; Steel form raiser and setter; Timber person, retimber person, wood or steel; Tunnel Concrete finisher

GROUP 4: Diamond driller; Sandblaster; Shaft and raise work

LABO1184-004 07/01/2020

	Rates	Fringes
Brick Tender	$ 34.00	19.77

LABO1414-001 08/05/2020

	Rates	Fringes
LABORER		
PLASTER CLEAN-UP LABORER	$ 36.03	21.01
PLASTER TENDER	$ 38.58	21.01

Work on a swing stage scaffold: $1.00 per hour additional.

PAIN0036-001 07/01/2020

	Rates	Fringes
Painters: (Including Lead Abatement)		
(1) Repaint (excludes San Diego County)	$ 29.59	17.12
(2) All Other Work	$ 33.12	17.24

REPAINT of any previously painted structure. Exceptions: work involving the aerospace industry, breweries, commercial recreational facilities, hotels which operate commercial establishments as part of hotel service, and sports facilities.

PAIN0036-008 10/01/2020

	Rates	Fringes
DRYWALL FINISHER/TAPER	$ 43.18	20.92

PAIN0036-015 01/01/2020

	Rates	Fringes
GLAZIER	$ 43.45	23.39

FOOTNOTE: Additional $1.25 per hour for work in a condor, from the third (3rd) floor and up Additional $1.25 per hour for work on the outside of the building from a swing stage or any suspended contrivance, from the ground up

---

PLAS0200-009 08/07/2019

	Rates	Fringes
PLASTERER	$ 43.73	16.03

PLAS0500-002 07/01/2020

	Rates	Fringes
CEMENT MASON/CONCRETE FINISHER	$ 38.50	25.91

PLUM0016-001 09/01/2020

	Rates	Fringes
PLUMBER/PIPEFITTER		
Work ONLY on new additions and remodeling of bars, restaurant, stores and commercial buildings not to exceed 5,000 sq. ft. of floor space	$ 50.70	23.73
Work ONLY on strip malls, light commercial, tenant improvement and remodel work	$ 38.73	22.06
All other work except work on new additions and remodeling of bars, restaurant, stores and commercial buildings not to exceed 5,000 sq. ft. of floor space and work on strip malls, light commercial, tenant improvement and remodel work	$ 52.28	24.71

PLUM0345-001 09/01/2020

	Rates	Fringes
PLUMBER		
Landscape/Irrigation Fitter	$ 35.30	24.10
Sewer & Storm Drain Work	$ 39.39	21.48

ROOF0036-002 09/15/2020

	Rates	Fringes
ROOFER	$ 40.77	18.22

FOOTNOTE: Pitch premium: Work on which employees are exposed to pitch fumes or required to handle pitch, pitch base or pitch impregnated products, or any material containing coal tar pitch, the entire roofing crew shall receive $1.75 per hour ""pitch premium"" pay.

SFCA0669-002 01/01/2021

	Rates	Fringes
SPRINKLER FITTER	$ 39.83	26.23

SHEE0105-003 01/01/2021

LOS ANGELES (South of a straight line drawn between Gorman and Big Pines)and Catalina Island, INYO, KERN (Northeast part, East of Hwy 395), MONO ORANGE, RIVERSIDE, AND SAN BERNARDINO COUNTIES

	Rates	Fringes
SHEET METAL WORKER		
(1) Commercial - New Construction and Remodel		

work.....$ 48.28 29.46
(2) Industrial work
including air pollution
control systems, noise
abatement, hand rails,
guard rails, excluding
aritechtural sheet metal
work, excluding A-C,
heating, ventilating
systems for human comfort...$ 48.28 29.46

TEAM0011-002 07/01/2020

	Rates	Fringes
TRUCK DRIVER		
GROUP 1	$ 32.59	30.59
GROUP 2	$ 32.74	30.59
GROUP 3	$ 32.87	30.59
GROUP 4	$ 33.06	30.59
GROUP 5	$ 33.09	30.59
GROUP 6	$ 33.12	30.59
GROUP 7	$ 33.37	30.59
GROUP 8	$ 33.62	30.59
GROUP 9	$ 33.82	30.59
GROUP 10	$ 34.12	30.59
GROUP 11	$ 34.62	30.59
GROUP 12	$ 35.05	30.59

WORK ON ALL MILITARY BASES:
PREMIUM PAY: $3.00 per hour additional.
[29 palms Marine Base, Camp Roberts, China Lake, Edwards AFB, El Centro Naval Facility, Fort Irwin, Marine Corps Logistics Base at Nebo & Yermo, Mountain Warfare Training Center, Bridgeport, Point Arguello, Point Conception, Vandenberg AFB]

TRUCK DRIVERS CLASSIFICATIONS

GROUP 1: Truck driver

GROUP 2: Driver of vehicle or combination of vehicles - 2 axles; Traffic control pilot car excluding moving heavy equipment permit load; Truck mounted broom

GROUP 3: Driver of vehicle or combination of vehicles - 3 axles; Boot person; Cement mason distribution truck; Fuel truck driver; Water truck - 2 axle; Dump truck, less than 16 yds. water level; Erosion control driver

GROUP 4: Driver of transit mix truck, under 3 yds.; Dumpcrete truck, less than 6-1/2 yds. water level

GROUP 5: Water truck, 3 or more axles; Truck greaser and tire person ($0.50 additional for tire person); Pipeline and utility working truck driver, including winch truck and plastic fusion, limited to pipeline and utility work; Slurry truck driver

GROUP 6: Transit mix truck, 3 yds. or more; Dumpcrete truck, 6-1/2 yds. water level and over; Vehicle or combination of vehicles - 4 or more axles; Oil spreader truck; Dump truck, 16 yds. to 25 yds. water level

GROUP 7: A Frame, Swedish crane or similar; Forklift driver; Ross carrier driver

GROUP 8: Dump truck, 25 yds. to 49 yds. water level; Truck repair person; Water pull - single engine; Welder

GROUP 9: Truck repair person/welder; Low bed driver, 9 axles or over

GROUP 10: Dump truck - 50 yds. or more water level; Water pull - single engine with attachment

GROUP 11: Water pull - twin engine; Water pull - twin engine with attachments; Winch truck driver - $1.25 additional when operating winch or similar special attachments

GROUP 12: Boom Truck 17K and above

WELDERS - Receive rate prescribed for craft performing operation to which welding is incidental.

==========

Note: Executive Order (EO) 13706, Establishing Paid Sick Leave for Federal Contractors applies to all contracts subject to the Davis-Bacon Act for which the contract is awarded (and any solicitation was issued) on or after January 1, 2017. If this contract is covered by the EO, the contractor must provide employees with 1 hour of paid sick leave for every 30 hours they work, up to 56 hours of paid sick leave each year. Employees must be permitted to use paid sick leave for their own illness, injury or other health-related needs, including preventive care; to assist a family member (or person who is like family to the employee) who is ill, injured, or has other health-related needs, including preventive care; or for reasons resulting from, or to assist a family member (or person who is like family to the employee) who is a victim of, domestic violence, sexual assault, or stalking. Additional information on contractor requirements and worker protections under the EO is available at www.dol.gov/whd/govcontracts.

Unlisted classifications needed for work not included within the scope of the classifications listed may be added after award only as provided in the labor standards contract clauses (29CFR 5.5 (a) (1) (ii)).

The body of each wage determination lists the classification and wage rates that have been found to be prevailing for the cited type(s) of construction in the area covered by the wage determination. The classifications are listed in alphabetical order of ""identifiers"" that indicate whether the particular rate is a union rate (current union negotiated rate for local), a survey rate (weighted average rate) or a union average rate (weighted union average rate).

Union Rate Identifiers

A four letter classification abbreviation identifier enclosed

in dotted lines beginning with characters other than ""SU"" or ""UAVG"" denotes that the union classification and rate were prevailing for that classification in the survey. Example: PLUM0198-005 07/01/2014. PLUM is an abbreviation identifier of the union which prevailed in the survey for this classification, which in this example would be Plumbers. 0198 indicates the local union number or district council number where applicable, i.e., Plumbers Local 0198. The next number, 005 in the example, is an internal number used in processing the wage determination. 07/01/2014 is the effective date of the most current negotiated rate, which in this example is July 1, 2014.

Union prevailing wage rates are updated to reflect all rate changes in the collective bargaining agreement (CBA) governing this classification and rate.

Survey Rate Identifiers

Classifications listed under the ""SU"" identifier indicate that no one rate prevailed for this classification in the survey and the published rate is derived by computing a weighted average rate based on all the rates reported in the survey for that classification. As this weighted average rate includes all rates reported in the survey, it may include both union and non-union rates. Example: SULA2012-007 5/13/2014. SU indicates the rates are survey rates based on a weighted average calculation of rates and are not majority rates. LA indicates the State of Louisiana. 2012 is the year of survey on which these classifications and rates are based. The next number, 007 in the example, is an internal number used in producing the wage determination. 5/13/2014 indicates the survey completion date for the classifications and rates under that identifier.

Survey wage rates are not updated and remain in effect until a new survey is conducted.

Union Average Rate Identifiers

Classification(s) listed under the UAVG identifier indicate that no single majority rate prevailed for those classifications; however, 100% of the data reported for the classifications was union data. EXAMPLE: UAVG-OH-0010 08/29/2014. UAVG indicates that the rate is a weighted union average rate. OH indicates the state. The next number, 0010 in the example, is an internal number used in producing the wage determination. 08/29/2014 indicates the survey completion date for the classifications and rates under that identifier.

A UAVG rate will be updated once a year, usually in January of each year, to reflect a weighted average of the current negotiated/CBA rate of the union locals from which the rate is based.

WAGE DETERMINATION APPEALS PROCESS

1.) Has there been an initial decision in the matter? This can be:

* an existing published wage determination
* a survey underlying a wage determination

* a Wage and Hour Division letter setting forth a position on a wage determination matter
* a conformance (additional classification and rate) ruling

On survey related matters, initial contact, including requests for summaries of surveys, should be with the Wage and Hour Regional Office for the area in which the survey was conducted because those Regional Offices have responsibility for the Davis-Bacon survey program. If the response from this initial contact is not satisfactory, then the process described in 2.) and 3.) should be followed.

With regard to any other matter not yet ripe for the formal process described here, initial contact should be with the Branch of Construction Wage Determinations. Write to:

Branch of Construction Wage Determinations
Wage and Hour Division
U.S. Department of Labor
200 Constitution Avenue, N.W.
Washington, DC 20210

2.) If the answer to the question in 1.) is yes, then an interested party (those affected by the action) can request review and reconsideration from the Wage and Hour Administrator (See 29 CFR Part 1.8 and 29 CFR Part 7). Write to:

Wage and Hour Administrator
U.S. Department of Labor
200 Constitution Avenue, N.W.
Washington, DC 20210

The request should be accompanied by a full statement of the interested party's position and by any information (wage payment data, project description, area practice material, etc.) that the requestor considers relevant to the issue.

3.) If the decision of the Administrator is not favorable, an interested party may appeal directly to the Administrative Review Board (formerly the Wage Appeals Board). Write to:

Administrative Review Board
U.S. Department of Labor
200 Constitution Avenue, N.W.
Washington, DC 20210

4.) All decisions by the Administrative Review Board are final.

==========

END OF GENERAL DECISION"

SPECIAL PROVISIONS

TABLE OF CONTENTS

Page

GENERAL PROVISIONS 1

1 GENERAL 2
1-1.01 GENERAL 2
1-1.06 ABBREVIATIONS 2
1-1.07 DEFINITIONS 3
1-1.07B Glossary 3
1-1.12 MISCELLANY 11

2 BIDDING 12

3 CONTRACT AWARD AND EXECUTION 13

4 SCOPE OF WORK 14
4-1.05 CHANGES AND EXTRA WORK 14
4-1.05A(1) Accord and Satisfaction 14
4-1.05A(2) Construction Change Directives 14
4-1.05A(3) Extra Work 14
4-1.06 DIFFERING SITE CONDITIONS 15
4-1.06A Differing Site Conditions and Special Hazardous Substances and Processes 15
4-1.08 DISPUTED WORK 17
4-1.13 CLEANUP 17
4-1.13A SOLID WASTE DISPOSAL AND RECYCLING REPORT 17

5 CONTROL OF WORK 18
5-1.02 CONTRACT COMPONENTS 18
5-1.12 ASSIGNMENT 18
5-1.13 SUBCONTRACTING 18
5-1.13A General 18
5-1.13B Disadvantaged Business Enterprises 20
5-1.13B(1) General 20
5-1.16 REPRESENTATIVE 20
5-1.20B Permits, Licenses, Agreements, and Certifications 20
5-1.20B(1) National Pollutant 21
5-1.20B(2) Licenses 21
5-1.20B(4) Contractor-Property Owner Agreement 21
5-1.23 SUBMITTALS 22
5-1.26 CONSTRUCTION SURVEYS 22
5-1.27 RECORDS 23
5-1.27F Record/As-Built Drawings 23
5-1.29 OWNER-OPERATOR LISTING 23
5-1.31 JOBSITE APPEARANCE 24
5-1.33 EQUIPMENT 25
5-1.36 PROPERTY AND FACILITY PRESERVATION 25
5-1.36C Nonhighway Facilities 27
5-1.37 MAINTENANCE AND PROTECTION 27
5-1.43 POTENTIAL CLAIMS AND DISPUTE RESOLUTION 27

TABLE OF CONTENTS

Page

5-1.43 CLAIMS AND DISPUTE RESOLUTION 27
5-1.43.1 Public Contract Code Section 9204 Claims Process 27
5-1.43.2 Definition of Claim 27
5-1.43.3 Accrual of Claim 28
5-1.43.4 Content of Claims. A Claim must include the following: 28
5-1.43.5 Waiver of Claims for Noncompliance 30
5-1.43.6 Submission of Claims 30
5-1.43.7 Owner's Receipt of a 9204 Claim; Governing Body Approval; Payment of Undisputed Amount 30
5-1.43.8 Informal Conference to Meet and Confer; Nonbinding Mediation 31
5-1.43.9 City Failure to Respond to Claim is Deemed Rejected 31
5-1.43A Public Contract Code Sections 20104–20104.6 ("Article 1.5") Resolution of Construction Claims 32
5-1.43B Notice of Third Party Claims 32
5-1.43C Litigation 32
5-1.43D Government Code Claims 32
5-1.46 FINAL INSPECTION AND CONTRACT ACCEPTANCE 32
5-1.47 GUARANTEE 33

6 CONTROL OF MATERIALS 35
6-1.01 GENERAL 35
6-1.03 LOCAL MATERIALS 35
6-1.03A Borrow, Disposal and Material Sites 35
6-1.04C Steel and Iron Materials 35
6-1.04C(1) Gray Iron Castings 35
6-1.04C(2) Slag Aggregate 37
6-1.05 SPECIFIC BRAND OR TRADE NAME AND SUBSTITUTION 37
6-2 QUALITY ASSURANCE 37
6-2.01A General 37

7 LEGAL RELATIONS AND RESPONSIBILITY TO THE PUBLIC 40
7-1.02 LAWS 40
7-1.02K PAYMENT OF PREVAILING WAGES AND EMPLOYMENT OF APPRENTICES 40
7-1.02K Payment of Prevailing Wages and Employment of Apprentices 40
7-1.02K(1) Determination of Prevailing Wage Rates 40
7-1.02K(2) Payment of Prevailing Wage Rates 41
7-1.02K(3) Penalty for Prevailing Wage Rate Underpayment 41
7-1.02K(4) Withholding 42
7-1.02K(5) Certified Payroll Records and Basic Payroll Records 42
7-1.02K(6) Submittal of Certified Payroll Records 42
7-1.02K(7) Making Certified Payroll Records Available Upon Request 43
7-1.02K(8) Forfeiture for Failure to Comply with Written Record Request Laws 44
7-1.02K(9) Hours of Work 44
7-1.02K(10) Responsibility for Subcontractors' Payment of Prevailing Wages 44
7-1.02K(11) Statement of Employer Payments 45
7-1.02K(12) Apprentices 45

TABLE OF CONTENTS

Page

7-1.02K(13) Employment of Minors 48
7-1.02K(14) Labor Non-Discrimination 48
7-1.02K(15) Posting of Signs and Employee Interviews 51
7-1.02K(16) Occupational Safety and Health Standards 52
7-1.03 PUBLIC CONVENICENCE 53
7-1.04 PUBLIC SAFETY 54
7-1.05 INDEMNIFICATION 54
7-1.06 INSURANCE 54
7-1.07 LEGAL ACTIONS AGAINST THE DEPARTMENT 54

8 PROSECUTION AND PROGRESS 55
8-1.02 SCHEDULE 55
8-1.03 PRECONSTRUCTION CONFERENCE 55
8-1.04 START OF JOB SITE ACTIVITIES 55
8-1.05 TIME 55
8-1.06 SUSPENSIONS 56
8-1.07 DELAYS 57
8-1.07A General 57
8-1.07B Time Adjustments 57
8-1.07C Payment Adjustments 57
8-1.10 LIQUIDATED DAMAGES 58
8-1.13 CONTRACTOR'S CONTROL TERMINATION 58
8-1.13 TERMINATION FOR CAUSE AND CONVENIENCE 58
8-1.13A Termination for Cause. 58
8-1.13B Termination for Convenience 60

9 PAYMENT 62
9-1.04 FORCE ACCOUNT 62
9-1.04(3) MATERIALS 62
9-1.16 PROGRESS PAYMENTS 62
9-1.16 STOP NOTICE WITHHOLDS 63
9-1.16E PROMPT PROGRESS PAYMENT TO SUBCONTRACTORS 63
9-1.16F RETENTIONS 64
9-1.15F Retentions 64
9-1.17B PAYMENT BEFORE FINAL ESTIMATE 65
9-1.17C PROPOSED FINAL ESTIMATE 65
9-1.17D FINAL PAYMENT AND CLAIMS 65

GENERAL PROVISIONS

1 GENERAL

1-1.01 GENERAL

Add the following at the end of Section 1-1.01:

The Work shall be performed in accordance with the Special Provisions which amend, modify, and/or supplement the Standard Specifications and Standard Plans of the California Department of Transportation, and Revised Standard Specifications, the latest edition, including amendments, in effect and published at the Bid Deadline unless otherwise specifically referred to by edition, volume, or date.

For the latest edition of the California Department of Transportation's Standard Specifications and Revised Standard Specifications, see:

https://dot.ca.gov/programs/design/ccs-standard-plans-and-standard-specifications

Any reference to "Section" or "Subsection" in these Special Provisions shall refer to said Standard Specifications, as amended, modified, and/or supplemented by the Special Provisions. The Special Provisions are arranged in accordance with the numbering and format used by the California Department of Transportation.

1-1.06 ABBREVIATIONS

Add the following to Section 1-1.06:

Abbreviation	Meaning
ADA	Americans with Disabilities Act
AGA	American Gas Association
AI	The Asphalt Institute
AIA	American Institute of Architects
AIEE	American Institute of Electrical Engineers
APWA	American Public Works Association
ASA	American Standards Association (now ANSI)
ASCE	American Society of Civil Engineers
ASHRAE	American Society of Heating, Refrigerating, and Air Conditioning Engineers
B&P	Business and Professions Code Section No.
CA	California Administrative Code Section No.
CC	California Civil Code Section No.
CCP	California Code of Civil Procedure Section No.
CGC	California Government Code Section No.
CRSI	Concrete Reinforcing Steel Institute
CSD	Community Services District of the City of Moreno Valley
CVC	California Vehicle Code Section No.
EDC	Educational Code Section No.
EMWD	Eastern Municipal Water District
IC	California Insurance Code Section No.
LC	Labor Code Section No.
NBFU	National Board of Fire Underwriters
OSA	Office of State Architect
PCA	Portland Cement Association

Abbreviation	Meaning
PCC	Public Contract Code Section No.
PS & E	Plans Specifications and Estimates
RCFC & WCD	Riverside County Flood Control and Water Conservation District
RCTC	Riverside County Transportation Commission
RTA	Riverside Transit Authority
UBC	Uniform Building Code, Pacific Coast Building Officials Conference of the International Conference of Building Officials
USASI or USAS	United States of America Standards Institute (Now ANSI)
WMWD	Western Municipal Water District
WRCOG	Western Riverside Council of Governments

1-1.07 DEFINITIONS

1-1.07B Glossary

Add or replace the following terms and definitions:

TERMS	DEFINITION
Addendum	Written or graphic instrument issued by the County prior to opening of Bids, which clarifies, corrects or changes the Contract Documents.
Admitted	Entitled to transact insurance business in California (IC 24).
Admitted Surety Insurer	A corporate insurer or a reciprocal or interinsurance exchange to which the Insurance Commissioner has issued a certificate of authority to transact surety insurance in this state, as defined in IC 105 (CCP 995.120).
Agency	The City of Moreno Valley.
Alternate Bid, Alternate Bid Price	The price stated in the Bid Schedule for which the Bidder offers to perform the Work described in the Contract Documents as Alternate Work, to be added or deducted from the Base Bid, which shall be the Contractor's responsibility if the City accepts the Alternate Bid Item.
Applicable Law	All state, federal, and local laws, statutes, ordinances, codes, rules, and regulations, building inspection assessments and recommendations, fire marshal approvals, lawful orders of governmental authorities, governing Contractor's performance of the Work.
Base Bid, Base Bid Price	The price stated in the Bid for which the Bidder offers to perform the Work described in the Contract Documents as the base Contract Work (i.e., not including Alternate Bid Items).

TERMS	DEFINITION
Bid	The Bid is comprised of the Electronic Bid Forms, comprised of the electronically submitted Bid Schedule, the electronically submitted Subcontractor List, the electronic acknowledgement of receipt of Addenda, if any, generated through the City of Moreno Valley Vendor Portal on the PlanetBids website, together with the Bid Forms prescribed by the City in the Notice Inviting Bids, scanned and uploaded to the City of Moreno Valley Vendor Portal on the PlanetBids website.
Bid Forms	Hard Copy documents that must scanned and uploaded and accompany the Electronic Bid Forms which include, but are not limited to, the Bidder's Proposal, Bidder's Bond or alternate form of Bid Security, Contractor's Statement, and any other forms prescribed by the City in the Notice Inviting Bids.
Bid Item	An item of Work listed on the Bid Schedule for which the Bidder provides a price.
Bid Item List	Whenever the term "Bid Item List" is used, it shall be deemed to refer to "Bid Schedule".
Bid Schedule	The list of items of Work, units of measure, Estimated Quantities, and the prices offered by the Bidder submitted on the electronic form through the City of Moreno Valley Vendor Portal on the PlanetBids website, setting forth the prices for the Work including the Base Bid Price and Alternate Bid Prices, if any.
Board	The City Council of the City of Moreno Valley, which is the awarding authority of the City.
CA Building Code	The latest edition adopted by the City of Moreno Valley.
CA Electrical Code	The latest edition adopted by the City of Moreno Valley.
CA Fire Code	The latest edition adopted by the City of Moreno Valley.
CA Mechanical Code	The latest edition adopted by the City of Moreno Valley.
CA Plumbing Code	The latest edition adopted by the City of Moreno Valley.
Calendar Day or Day	24 hours beginning at 12 midnight and ending at 11:59 p.m.
Change Order	A written instrument prepared by the City and signed by the City and Contractor, stating their agreement upon all of the following: (1) the scope of the change in the Work; (2) the amount of the adjustment, if any, in the Contract Price; and (3) the extent of the adjustment, if any, in the Contract Time. See Section **4-1.05** of the City Special Provisions.

TERMS	DEFINITION
Change Order Proposal	A request issued by the City to the Contractor that describes a proposed change to the Work and requests that the Contractor submit an itemized Change Order Proposal (See Appendix) to the City.
City	The City of Moreno Valley.
City Council	The City Council of the City of Moreno Valley.
City Special Provisions or Special Provisions	Provisions of the City that amend, modify, and/or supplement the Standard Specifications and Standard Plans of the State of California and Revised Standard Specifications of the Department of Transportation, current edition.
Claim	See section **5-1.43** of the City Special Provisions.
Construction Change Directive	A written order prepared and signed by the City, directing a change in the Work prior to Contractor's agreement on adjustment, if any, in the Contract Price or Contract Time, or both.
Contract Acceptance	See Final Acceptance.
Contract Documents	The Contract Documents are enumerated in the Agreement.
Contract Price	The total aggregate amount of the Contractor's Bid Price for which the Contract is awarded, subject to adjustment for variances in quantities and Change Orders executed in accordance with the Contract Documents.
Contract Time	The number of Working Days stated in the Agreement for the completion of the Work, as may be adjusted by Change Orders and Construction Change Directives.
Contractor's Representative	See Section **5-1.16** of the Special Provisions.
CWA	The Community Workforce Agreement by and Between the City of Moreno Valley and San Bernardino/Riverside Counties Building and Construction Trades Council, AFL-CIO and the Signatory Craft Councils and Unions.
Day	24 consecutive hours running from midnight to midnight; calendar day.

TERMS	DEFINITION
Delay	Event that extends the completion of an activity. See Non-Compensable Delay, Excusable Compensable Delay, and Concurrent Delay in Section **8-1.07** below.
Department	The City of Moreno Valley, acting through the City Engineer, except any references to the Department's offices, facility rearrangement, forms, websites, manuals, guides, publications, certifications, programs, audits, quality control, inspections, sampling, test methods in the Specifications of Plans, and Standards, which shall be defined as the Department of Transportation, as defined in St. & Hwy. Code Section 20 and authorized in St. & Hwy. Code Section 90, acting through its authorized representatives.
District	The Riverside County Flood Control & Water Conservation District (RCFC&WCD).
Drawings or Plans	The part of the Contract Documents which show the characteristics and scope of the Work to be performed, and which have been prepared or approved by the Engineer.
Engineer/City Engineer	The City Engineer of the City of Moreno Valley or other person designated by the City Engineer acting either directly or through authorized representatives.
Estimated Quantities	The quantities Work anticipated to be performed, as set forth in the Bid Schedule, designated as units or a lump sum.
Excavation	Any operation in which earth, rock, or other material in the ground is moved, removed, or otherwise displaced by means of tools, equipment, or explosives in any of the following ways: grading, trenching, digging, ditching, drilling, augering, tunneling, scraping, cable or pipe plowing and driving, or any other way (CGC 4216).
Field Order	A written order effecting a change in the Work not involving an adjustment in the Contract Price or an extension of the Contract Time, issued by the Engineer to the Contractor during construction.

TERMS	DEFINITION
Final Acceptance	Final Acceptance of the Work occurs when the Engineer determines that Final Completion (as defined in Section **5-1.46**) of the Work has been achieved and a Notice of Completion has been recorded with the County of Riverside by the City. The date of Final Acceptance is the date the Notice of Completion is recorded by the County of Riverside Recorder. (Also known as Contract Acceptance.)
Final Completion	Final Completion is the stage of performance of the Work when (1) all Work required by the Contract Documents has been fully completed in compliance with the Contract Documents and all Applicable Laws including, but not limited to, correction or completion of all Punch List items noted by City; (2) Contractor has delivered to City all closeout documentation required by the Contract Documents; and (3) documentation of all final governmental approvals has been submitted to City including, but not limited to the Engineer of record sign-off has been issued covering the entire Project site without exception or conditions.
Furlough Day	A day on which the City is closed for business for budget reasons. A Furlough Day may be a Working Day.
Geotechnical and/or Soils Engineer	The private consulting geotechnical engineer retained to perform soils material testing.
Hazardous Material	(1) A substance or combination of substances, which because of its quantity, concentration, or physical, chemical or infectious characteristics, may either: (a) Cause, or significantly contribute to an increase in mortality or an increase in serious irreversible or incapacitating reversible illness; or (b) Pose a substantial present or potential hazard to human health or environment when improperly treated, stored, transported or disposed of or otherwise managed. (2) Unless expressly provided otherwise, the term “hazardous material" shall be understood to also include extremely hazardous material.

TERMS	DEFINITION
Holiday	See Section **8-1.05** of the Special Provisions.
Inspector	The Engineer or representative of the Engineer who is assigned to inspect conformance of the work to the Plans and Specifications.
Laboratory	The designated laboratory authorized by the City to test materials and/or Work.
Labor Surcharge and Equipment Rental Rates	The latest edition in effect on the date the Work is performed. Published by the California Department of Transportation, Caltrans Publications, 1900 Royal Oaks Drive, Sacramento, California 95815.
Major Contract Bid Item	A Bid Item for which the Total Price is 10% or more of the Contract Price.
Manufacturer	A person, firm or corporation that fabricates, processes, or creates materials or equipment to be incorporated into the Project from raw materials or component parts.
Minor Contract Bid Item	A Bid Item for which the Total Price is less than 10% of the Contract Price.
Notice of Completion	A notice executed by the Engineer and recorded with the County of Riverside Recorder that provides formal notice of the completion of Work and Final Acceptance of the Work by the City. The Notice of Completion contains the name of the Contractor, description of the site sufficient for identification, including the street address of the site, if any, and date of Final Completion. The date of Final Acceptance is the date the Notice of Completion is recorded by the County of Riverside Recorder.
Notice to Proceed or Notice to Proceed with Construction	A written notice issued by the City to the Contractor that authorizes the Contractor to perform the Work.
Or Equal	The material, product, equipment, process, thing, or services proposed by the Contractor for use in the Work as equivalent to that specified in the Contract Documents, approved as equal in the opinion of the Engineer.
Owner	City of Moreno Valley unless otherwise specified.
Private Architect or Engineer	(If applicable) The private professional architect or consulting engineer who has prepared and signed the Plans.
Project	The total construction of which the Work performed under the Contract Documents may be the whole or a part and which may include construction by other contractors and the City's own forces.

TERMS	DEFINITION
Punch List	A list of items of Work to be completed or corrected by the Contractor in order to complete the Work as specified in the Contract Documents.
Registered Bidder	A Bidder that registers with the City via the City of Moreno Valley Vendor Portal through PlanetBids for electronic Bids, for Contract Documents.
Reference Documents	Drawings and documents showing (1) existing site conditions or as-built improvements, and (2) "Supplemental project information" relevant to the Project made available to Bidders for general background information about the Project. No guarantee is made that existing improvements or site conditions are accurately shown or described on the Reference Documents.
Reference Specification	Any specifications referred to in the Contract Documents other than Standard Specifications, Amendments to Standard Specifications, and Special Provisions, including, but not limited to bulletins, standards, rules, methods of analysis or tests, codes, and specifications of other agencies, engineering societies, or industrial associations. These refer to the latest edition, including amendments, in effect and published at the Bid Deadline, unless otherwise specifically referred to by edition, volume, or date.
Shop Drawings	All drawings, diagrams, illustrations, brochures, schedules and other data which are prepared by the Contractor, a Subcontractor, manufacturer, supplier, or distributor, which illustrate how specific portions of the Work shall be fabricated or installed.
Special Provisions	Provisions of the City that amend, modify, and/or supplement the Standard Specifications and Standard Plans of the State of California, Department of Transportation**,** the latest edition, including amendments, in effect and published at the Bid Deadline unless otherwise specifically referred to by edition, volume, or date, issued by the California Department of Transportation.
Specifications	Standard Specifications of the State of California, Department of Transportation Revised Standard Specifications, Special Provisions, and specifications in Addenda and Contract Change Orders. These refer to the latest edition, including amendments, in effect and published at the Bid Deadline unless otherwise specifically referred to by edition, volume, or date.
State	The City of Moreno Valley.
Supplier	Any person or organization who supplies materials or equipment for the Work, including that fabricated to a special design, but who does not perform labor at the site.

TERMS	DEFINITION
Technical Provisions	Part of the Special Provisions consisting of a written description of a technical nature of materials, equipment, construction system, standards, and workmanship, which includes the State Special Provisions, Amendments to the State Standard Specifications, and the Standard Plans list.
Transportation Division	A division within the City of Moreno Valley Department of Public Works that is assigned traffic-related matters.
Traffic Engineer	The representative of the Engineer who is assigned traffic-related matters.
Unauthorized Work	Work performed that is not required or authorized by the Contract Documents including, but not limited to, Work performed beyond the lines and grades described in the Contract or established by the Engineer or extra work performed without City authorization. Unauthorized Work will not be measured or paid for and no extension of Contract Time will be granted on account thereof. Any Unauthorized Work may be ordered removed at the Contractor's sole cost and expense. The failure of the County to direct or order removal of unauthorized work shall not constitute acceptance or approval of such work nor relieve the Contractor from any liability on account thereof.
Work	The construction and services required by the Contract Documents, whether completed or partially completed, and includes all other labor, materials, equipment, services provided or to be provided by the Contractor to fulfill the Contractor's obligations required for Contract acceptance.
Work Directive	A unilateral written order issued by the City directing Contractor to continue performance of the Work or a disputed item of Work pending resolution of a Claim or dispute concerning the scope of Work.
Working Day	See Section **8-1.05** of the Special Provisions***.***
Written Notice	A notice in writing required under the Contract Documents. Written Notice is deemed delivered and the service thereof completed, when: (1) posted by certified or registered U.S. Mail, return receipt requested, to the appropriate party at its last given address, or (2) delivered in person to said party or its authorized representative at the worksite.

1-1.12 MISCELLANY

Delete Section 1-1.12 in its entirety and substitute the following:

Make checks and bonds payable to the City of Moreno Valley.

2 BIDDING

Delete Section 2 in its entirety. See the Notice Inviting Bids Instructions to Bidders.

3 CONTRACT AWARD AND EXECUTION

Delete Section 3 in its entirety. See the Notice Inviting Bids and Instructions to Bidders.

4 SCOPE OF WORK

4-1.05 CHANGES AND EXTRA WORK

At the following at the end of Section 4-1.05A:

4-1.05A(1) Accord and Satisfaction

Contractor's agreement on any Change Order shall be a full compromise and settlement of all adjustments to the Contract Time and Contract Price, and compensation for any and all delay, extended or additional field and home office overhead, disruption, acceleration, inefficiencies, lost labor or equipment productivity, differing site conditions, construction interferences, and other extraordinary or consequential damages (hereinafter called "Impacts"), including any ripple or cumulative effect of said Impacts on the overall Work under the Contract arising directly or indirectly from the performance of Work described in the Change Order. By execution of any Change Order, Contractor agrees that the Change Order constitutes a complete accord and satisfaction with respect to all claims for schedule extension, Impacts, or any costs of whatsoever nature, character or kind arising out of or incidental to the Change Order. No action, conduct, omission, product failure or course of dealing by the City shall act to waive, modify, change, or alter the requirement that Change Orders must be in writing, signed by the City and Contractor, and that such written Change Orders are the exclusive method for effectuating any change to the Contract Price and/or Contract Time.

4-1.05A(2) Construction Change Directives

A Construction Change Directive is a written order prepared and signed by the City, directing a change in the Work prior to Contractor's agreement on adjustment, if any, in the Contract Price or Contract Time, or both. The City may by Construction Change Directive, without invalidating the Contract, order changes in the Work within the general scope of the Contract consisting of additions, deletions or other revisions, the Contract Price and Contract Time being adjusted accordingly. Upon receipt of a Construction Change Directive, the Contractor shall promptly proceed with the change in the Work involved. A Construction Change Directive shall be used in the absence of total agreement on the terms of a Change Order. The City's form of Construction Change directive is provided in the **Appendix N**.

4-1.05A(3) Extra Work

The Contractor shall not perform any Extra Work except upon written authorization from the Engineer.

All Extra Work shall conform to the Plans and Specifications.

The Contractor shall furnish to the Engineer each Subcontractor's signed detailed estimate of the cost for labor, materials, and equipment, including the markup by such Subcontractor for overhead and profit for Work added or deducted to a Subcontractor's scope of Work. The Contractor shall furnish to the Engineer the Sub-subcontractor's signed detailed estimate of the cost for labor, materials, and equipment, including the markup by such Sub-subcontractor for overhead and profit for Work added or deducted to a Sub-subcontractor's scope of Work. The Contractor shall furnish to the Engineer the vendor or supplier's signed detailed estimate or quotation of the cost to the Contractor for Work added or deducted from a vendor or supplier's scope of Work.

4-1.06 DIFFERING SITE CONDITIONS

Delete the "General" heading and add the following new Section 4-1.06A:

4-1.06A Differing Site Conditions and Special Hazardous Substances and Processes

The Contractor shall take precautions not to spill or contaminate an area with hazardous material. Materials found to be hazardous substances pursuant to the Hazardous Substances Information and Training Act (Labor Code Section 6360 et seq.), such as epoxy resins, motor oils, and petroleum derivatives, shall be disposed of properly. If any hazardous material is spilled or contaminates an area, the Contractor shall notify the Riverside County Department of Health, Environmental Health Division, and have the spill or contaminated area cleaned up at the Contractor's expense. The hazardous materials shall be disposed of in accordance with the laws governing said material at a State or United States Environmental Protection Agency approved treatment, storage or disposal facility, or recycling facility. The Contractor shall give the City a copy of the Uniform Hazardous Waste Manifest promptly after disposition of the hazardous material. This provision shall not be construed to affect or limit any other liability, duty or responsibility of the Contractor or other person with regard to safeguarding the health and safety of employees and other persons exposed to a toxic or hazardous material.

Any Work which involves digging trenches or other excavations that extend deeper than four feet (4') below the surface where discovery of hazardous waste or other unusual conditions may have an effect on the Work, the procedures shall be as follows:

a. The Contractor shall promptly, and before the following conditions are disturbed, notify the City in writing of any:

(A) Material that the Contractor believes may be material that is hazardous waste, as defined in Section 25117 of the Health and Safety Code, which is required to be removed to a Class I, Class II, or Class III disposal site in accordance with provisions of existing law.
(B) Subsurface or latent physical conditions at the site differing from those indicated.
(C) Unknown physical conditions at the site of any unusual nature, different materially from those ordinarily encountered and generally recognized as inherent in work of the character provided for in the contract.

b. The City shall promptly investigate the conditions, and if it finds that the conditions do materially so differ, or do involve hazardous waste, and cause a decrease or increase in the Contractor's cost of, or the time required for, performance of any part of the Work shall issue a Change Order pursuant to the requirements of the Contract Documents.

c. That, in the event that a dispute arises between the public entity and the Contractor whether the conditions materially differ, or involve hazardous waste, or cause a decrease or increase in the Contractor's cost of, or time required for, performance of any part of the Work, the Contractor shall not be excused from any scheduled completion date provided by the Contract, but shall proceed with all the Work to be performed under the Contract. The Contractor shall retain any and all rights provided either by Contract or by law which pertain to the resolution of disputes and protests between the contracting parties (PCC 7104).

Emergency Phone Numbers

The following emergency phone numbers are listed for the convenience of the Contractor to assist in complying with these requirements:

The Contractor shall keep a list of emergency phone numbers on the Project site. Whenever more than ten (10) employees are on the Project site at any time, said list shall be posted on a bulletin board, to be supplied and installed on the Project site by the Contractor, at his expense, in a location visible and accessible to all employees.

Ambulance Services 911
AT&T of California (formerly SBC/Pacific Bell) 800.288.2020
Box Springs Mutual Water Company 951.315.6870
Charter Spectrum (formerly Time Warner Communications) 866.892.2253
City of Moreno Valley **Fire Department** ..... 911 or 951.486.6784
City of Moreno Valley **Police Department** ..... 911 or 951.486.6700
City of Moreno Valley, Public Works Department 951.413.3100
City of Moreno Valley, PW Operations & Facilities 951.413.3160
Crown Castle (formerly Sunesys) 800.286.6664
Eastern Municipal Water District (Integrated Operations Center) ..... 951.928.3777 ext. 6265
Edgemont Community Services District (Albert A. Webb & Assoc.) 951.686.1070
Frontier Communications (formerly Verizon) ..... 800.921.8101 opt 2
Riverside University Health System 800.945.6171
27300 Iris Avenue, Moreno Valley (2 miles east of Perris Boulevard)
Moreno Valley Unified School District ..... 951.485.5600 ext. 3775
Moreno Valley Utilities (electrical) 877.811.1888
Questar Southern Trails 800.261.0668
5762 Bolsa Avenue, Suite 201
Huntington Beach, CA 92649
Riverside County Regional Medical Center 951.486.4000
26520 Cactus Avenue
(South of Hwy 60, Riverside, CA)
Riverside Medical Clinic 951.683.6370
6405 Day Street
(South of Hwy 60, Riverside, CA)
Riverside Transit Agency 909.684.0850
Southern California Edison Company 800.611.1911
Southern California Gas Company (Distribution) 800.423.1391
Southern California Gas Company (Transmission) 951.845.0709
Underground Service Alert 800.422.4133
United States Postal Service 951.656.3240
Val Verde Unified School District 951.940.6100
Valley Medical Group 951.242.9594
24490 Sunnymead Blvd., Moreno Valley
Waste Management 800.423.9986
Western Municipal Water District (answering service) 951.789.2960

4-1.08 DISPUTED WORK

Add the following new section:

In the event of disputed Work, the City shall have the right to unilaterally issue a written Work Directive and Contractor shall continue performance pending resolution of the dispute and shall maintain cost data described in Section **9-1.04** of the Standard Specifications as modified by these Special Provisions. The City's form of Work Directive is provided in the Appendix. Payment shall be made for such disputed Work as is later determined by negotiation between the parties or as is fixed by a court of law.

4-1.13 CLEANUP

Delete this section in its entirety and add the following:

Throughout all phases of construction, including suspension of the Work, and until Final Acceptance, the Contractor shall keep the Work site clean and free from rubbish and debris. Rubbish and debris collected on the Work site shall only be stored in roll-off, enclosed containers prior to disposal. Stockpiles of such will not be allowed.

Materials spilled along or on streets, roads, any public right of way, parking areas, or private property shall be removed completely and promptly.

When and as often as required by the Engineer, the Contractor shall furnish and operate self-loading motorized street sweeper equipped with a functional water spray system, to keep paved areas affected by the work clean and dust free. If the sweeper fails to keep the paved areas clean and dust free then the Contractor shall provide additional sweepers or stop the Work until the paved areas are clean and dust free. The use of water resulting in mud on paved areas will be not permitted.

All cleanup costs shall be included in the various related items of Work and no additional compensation will be allowed as a result of suspension of Work for failure to comply with clean up orders.

Waste Management of the Inland Empire, a division of Waste Management, Inc. (Tel: 951.280.5400) has an exclusive franchise with the City of Moreno Valley for the collection, transportation, recycling, composting, and disposal of solid waste, green waste, special waste, and construction and demolition waste and for providing temporary bin/roll-off services for all commercial and residential premises within the City, pursuant to Moreno Valley Municipal Code Chapter 6.02, "Refuse Collection, Transfer and Disposal."

Add the following new Section 4-1.13A:

4-1.13A SOLID WASTE DISPOSAL AND RECYCLING REPORT

The Contractor shall complete monthly Solid Waste Disposal and Recycling Reports and submit them to the City, as outlined in the Solid Waste Disposal and Recycling Report – Instructions (see Appendix **K**). The cost of the reports shall be borne by the Contractor as part of the Contract Price.

5 CONTROL OF WORK

5-1.02 CONTRACT COMPONENTS

Delete Section 5-1.02 in its entirety. See the Agreement.

5-1.12 ASSIGNMENT

Add the following to Section 5-1.12:

Indebtedness incurred by or on behalf of the Contractor for any reason in connection with the Work must be paid by the Contractor. The City, the Moreno Valley Housing Authority (MVHA), the Moreno Valley Community Services District (CSD), the Western Riverside Council of Governments (WRCOG), Riverside County Flood Control and Water Conservation District (RCFC&WCD), nor Caltrans have no obligation for any indebtedness or claim other than payments under terms of the Contract, and the Contractor shall not represent that it has any authority to create such an obligation on behalf of the City, the MVHA, CSD, WRCOG, RCFC&WCD, or Caltrans. The Contractor shall indemnify and hold harmless the City of Moreno Valley, the MVHA, CSD, WRCOG, RCFC&WCD, or Caltrans its officers, employees and agents from any loss, demand, damages, claims or actions arising from or in connection with said indebtedness.

5-1.13 SUBCONTRACTING

Delete Section 5-1.13A in its entirety and substitute the following:

5-1.13A General

No subcontract releases you from the Contract or relieves you of your responsibility for a subcontractor's work. The Contractor shall be responsible to the City for acts and omissions of the Contractor's employees, Subcontractors and their agents and employees, and other persons performing portions of the Work for, or on behalf of, the Contractor or any of its Subcontractors and for any damages, losses, costs and expenses resulting from such acts or omissions.

Before subcontracted work starts, submit a Subcontracting Request form (CEM-1201) available on the following Caltrans website:

https://dot.ca.gov/programs/construction/forms

Do not use a contractor who is not registered with the Department of Industrial Relations as a public works contractor:

https://efiling.dir.ca.gov/PWCR/Search

Do not use a debarred Subcontractor. Pursuant to Labor Code Section 1777.1, the Labor Commissioner publishes and distributes a list of contractors ineligible to perform work as a subcontractor on a public works project. This list of debarred contractors is available from the Department of Industrial Relations website at http://www.dir.ca.gov/dir/Labor_law/DLSE/Debar.html and the System for Award Management (federal) at www.sam.gov.

If you violate Public Contract Code § 4100 et seq., the County may exercise the remedies provided under Public Contract Code § 4110. The County may refer the violation to the Contractors State License Board as provided under Public Contract Code § 4111.

Self-performance. The Contractor shall perform, with its own organization, Contract Work amounting to at least 50 percent of the Contract Price. Any Bid that does not indicate that Work valued at least fifty percent (50%) of the Contract Price (except Specialty Items) will be performed by the Bidder's own forces, will be considered non-responsive and will be rejected with no further consideration. If, after execution of the Agreement, the City discovers the Contractor is performing Work valued at less than fifty percent (50%) of the Contract Price (except Specialty Items), the Contractor will be notified that it is in breach of the Contract. The Contractor's obligation to self-perform at least fifty percent (50%) of the Contract Price (except Specialty Items) is not subject to Change Orders that increase the value of subcontracted items of Work.

Each subcontract must comply with the Contract. All subcontracts shall include a provision that requires each Subcontractor, to the extent of the Work to be performed by the Subcontractor, to be bound to the Contractor by the terms of the Contract Documents, and to assume toward the Contractor all of the obligations and responsibilities that the Contractor assumes toward the City. Each subcontract agreement shall preserve and protect the rights of the City under the Contract Documents with respect to the Work to be performed by the Subcontractor so that subcontracting thereof will not prejudice such rights, and shall allow to the Subcontractor, unless specifically provided otherwise in the subcontract agreement, the benefit of all rights, remedies and redress against the Contractor that the Contractor, by the Contract Documents, has against the City. Where appropriate, the Contractor shall require each Subcontractor to enter into similar agreements with Sub-subcontractors. The Contractor shall make available to each proposed Subcontractor, prior to the execution of the subcontract agreement, copies of the Contract Documents to which the Subcontractor shall be bound by this Section. If any provision of any subcontract is inconsistent with any provision of the Contract Documents or the intent of the Contract Documents, then the Contract Documents shall control.

Subcontracts shall also contain certification by the Subcontractor that said Subcontractor is experienced in and qualified to do, and knowledgeable about, the subcontracted Work.

Each subcontractor must have an active and valid State contractor's license with a classification appropriate for the work to be performed (Business and Professions Code § 7000 et seq.).

Copies of subcontracts shall be provided to the Engineer upon request.

Upon City's request, Contractor shall immediately remove and not again use a subcontractor who fails to prosecute the work satisfactorily.

The Contractor shall be as fully responsible to the City for the acts and omissions of Subcontractors and of persons employed by them as the Contractor is for the acts and omissions of persons directly employed by the Contractor. The Contractor shall be responsible for the coordination of the trades, Subcontractors, and material suppliers engaged upon their Work. Neither the City nor any representative of the City will undertake to settle any difference between the Contractor and Subcontractors or between Subcontractors.

The City encourages you to include a dispute resolution process in each subcontract.

Each subcontractor must have an active and valid:

1. State contractor license with a classification appropriate for the work to be performed (Bus & Prof Code Section 7000 et seq.)

2. Public works contractor registration number with the Department of Industrial Relations.

Submit copies of subcontracts upon request.

Upon request, immediately remove and do not again use a subcontractor who fails to satisfactorily prosecute the work.

5-1.13B Disadvantaged Business Enterprises

5-1.13B(1) General

Section 5-1.13B is optional for this Contract, which has no federal-aid.

5-1.16 REPRESENTATIVE

Delete the last two sentences of Section 5-1.16 in their entirety and substitute the following:

The Contractor's Representative (or designated alternate) shall be present at the Project site at all times that Work is in progress. Submit the representative's (or designated alternate's) name and telephone number so the representative can be easily contacted to perform emergency work while Work is not in progress. Work by Subcontractors will not be allowed in the absence of the Contractor's Representative (or designated alternate), unless previous arrangements are approved by the Engineer in writing. In the event a Subcontractor attempts to perform Work in the absence of the Contractor's Representative (or designated alternate), a STOP WORK NOTICE will be issued to the Subcontractor.

On a daily basis, the Contractor's Representative (or designated alternate) shall provide the Engineer a list of all labor, equipment, and materials used, and a summary of Work performed on the Project that day. The Contractor shall provide this information by the end of the Working Day to the Engineer. If this information is not provided, the City will not process the Contractor's monthly progress payment.

When Work is not in progress and during periods when Work is suspended, arrangements acceptable to the Engineer shall be made for any emergency Work that may be required.

5-1.20B Permits, Licenses, Agreements, and Certifications

Delete Section 5-1.20B(1) – (2) in its entirety and substitute the following:

5-1.20B Work shall not be started until the Contractor has obtained all necessary licenses and permits. The Contractor shall obtain and pay for all permits and give all notices necessary and incident to the due and lawful prosecution of the Work and to the preservation of the public health and safety. Unless otherwise indicated within these Special Provisions, fees will not be collected on those permits issued by the City for City-owned projects; some exceptions include

Temporary Use Permit, City Business Licenses, etc. It is the responsibility of the Contractor to verify required permits and responsibility of payment therefor prior to Bid submittal.

5-1.20B(1) National Pollutant

The Contractor shall provide National Pollutant Discharge Elimination System (NPDES) permit training for Urban Runoff management to Contractor's employees and Subcontractors, if any. Each day that Contractor fails to provide Urban Runoff management training is a violation of the current version of the Regional Water Quality Control Board Order, and a breach of the Contract with the City. Contractor understands and agrees that NPDES permit violations are grounds for enforcement action by the Environmental Protection Agency, the State/Regional Water Resources Control Board, and the City, and may result in permit termination (stop work order), civil and criminal fines, and termination of the Contract. By submitting a Bid, the Contractor certifies to the City that it has trained its employees and Subcontractors, if any, for Urban Runoff management and included sufficient sums in the Bid Price to cover such costs of said training.

The Contractor is responsible for all clean up and payment of all fines levied as a result of any illegal discharge (as defined in the NPDES Permit) occurring as a result of the Contractor's Work and/or operations.

5-1.20B(2) Licenses

The Contractor and Subcontractors shall obtain and incur all costs for licenses necessitated by their operations. The Contractor and all Subcontractors shall obtain and keep current a City of Moreno Valley Business License prior to commencement and throughout the duration of their Work

5-1.20B(4) Contractor-Property Owner Agreement

Add the following to the end of Section 5-1.20B(4):

Nothing in the Specifications shall be construed to allow the Contractor to make any arrangement with any person to permit occupancy or use of any land, structure, or building within the Project site for any purpose whatsoever, either with or without compensation, in conflict with any agreement between the City and any owner, former owner, or tenant of the land, structure, or building.

The street/highway right-of-way shall be used only for purposes that are necessary to perform the Work. The Contractor shall not occupy the right-of-way, or allow others to occupy the right-of-way, for purposes that are not necessary to perform the Work.

The Contractor shall secure at its own expense any area required for plant sites, storage of equipment or materials, or for other purposes if sufficient area is not available to the Contractor within the Contract limits, or at the sites designated on the plans outside the Contract limits.

For the aforementioned uses on private or public property (outside the public right-of-way), the Contractor shall apply for a temporary use permit (TUP) from the City's Planning Division. The Contractor shall not have use of the area until the TUP has been issued. Fees for the TUP will be the responsibility of the Contractor.

The City shall provide any required rights of entry at no cost to the Contractor for Work on private property that is shown on the Plans. Such rights of entry do not relieve the Contractor of the need to provide, at its own cost, permits and insurance required of the Contractor by other agencies and organizations.

5-1.23 SUBMITTALS

Add the following to the end of Section 5-1.23A:

As specified in the Agreement, the Contractor shall, at its own expense, transmit to the Engineer for review and acceptance, working drawings, shop drawings, supporting information, and/or other available instructive and descriptive information from the manufacturer, when and as required by the Plans or Special Provisions or requested by the Engineer, and in such sequence as to cause no delay in the Work. Shop drawings will not be required for standard items in common use for which adequate manufacturers' literature is available unless otherwise required by the Engineer.

The Contractor shall consecutively number, thoroughly check, approve and sign each submittal and transmit the submittals to the Engineer for review. In the event that certain submittals are submitted without the Contractor's approval signature or are unacceptable to the City, they shall be rejected by the Engineer. The Contractor shall thereafter correct said submittals and resubmit.

In the event that in the process of development of the submittals it is discovered that there are defects and/or errors on the Plans that result in conflict between said Plans and the submittals, or if the submittals show variation from the Plans or other Contract Documents because of standard shop practice or other reasons, the Contractor shall thoroughly describe and explain said defects and/or conflicts in his or her transmittal letter to the Engineer.

The Engineer's review of the submittals will be for general design and arrangement only, and shall not relieve the Contractor from responsibility for errors of any sort in the submittals or of the responsibility for executing the work in accordance with the Contract Documents. The Contractor shall be solely responsible for the correctness of the submittals, for shop fits and field connections, and for the results obtained by use of such submittals. The Contractor shall verify and be fully responsible for all dimensions and job-site conditions affecting the Work and shall be responsible for furnishing and installing the proper materials required by the Contract Documents.

The Contract Time will not be extended due to the failure of the Contractor to provide submittals as required by the Contract Documents in a timely manner.

5-1.26 CONSTRUCTION SURVEYS

Add the following at the end of Section 5-1.26:

The Contractor shall preserve bench marks, survey monuments, survey stakes and points set for lines, grades or measurements of Work in their proper places unless removal is authorized by the Engineer. The City shall bear the cost of one (1) set of construction stakes and shall give a copy of the cut sheets to the Contractor. The cost of restaking due to the negligence of the Contractor will be deducted from the Contract Price via Change Order.

The cost of rework surveying, overtime, travel and other related costs incurred by the City will be deducted from the Contractor's progress payments.

5-1.27 RECORDS

Delete all text after the first sentence of Section 5-1.27E.

Add the following new Section after 5-1.27E:

5-1.27F Record/As-Built Drawings

At the beginning of the Project, one bond copy or blueline print of each applicable Drawing will be issued by the City to the Contractor for use in preparing Record Drawings (also called "red line As Built Drawings").

Actual construction conditions shall be accurately and completely recorded on the bond copy or blueline prints as the Project progresses. The Contractor shall update the Record Drawings daily and review the Record Drawings with the Engineer weekly. If the Contractor fails to update Record Drawings, the monthly progress payment will not be processed until the Engineer is satisfied that the Record Drawings have been updated for the month the Contractor is requesting a progress payment. Upon completion of the Work, the Contractor shall sign the Record Drawings and shall submit same to the Engineer for review and approval. Retention will not be released to the Contractor until the Record Drawings have been submitted to the City and approved. If the Contractor has not submitted an accurate copy of the Record Drawings within 30 Calendar Days after completion of the Work, the City reserves the right to have the Record Drawings prepared and to deduct all applicable costs incurred from the retention amount.

5-1.29 OWNER-OPERATOR LISTING

Add the following as new Section 5-1.29:

The Contractor and Subcontractors shall list all owner-operators on the project and certify owner-operator status by providing at least the following information:

(1) Operator name as shown on all payrolls.
(2) Business address of the owner-operator.
(3) The owner-operator's social security number.
(4) The truck/tractor license number, California identification truck number, weight, and number of axels. If equipment is used, the Contractor must provide a complete description of the equipment, make, model number, and include the dates the equipment was operated on the project.
(5) Operator labor classification.
(6) Hours worked by the owner-operator as reported on a daily basis.
(7) Hourly rental rate paid for the owner-operator equipment.
(8) Actual payments earned.

This information must be provided by the Contractor on the California Department of Transportation "Owner-Operator Listing" and "Owner-Operator Listing Statement of Compliance" forms, available online at http://www.dot.ca.gov/hq/construc/forms/cem2503.pdf. Certification will be accepted only from the Contractor or Subcontractor employing the owner-operator, available online at https://forms.dot.ca.gov/v2Forms/servlet/FormRenderer?frmid=CEM2503 . The City will not accept certified payrolls or an Owner-Operator Listing directly from the owner-operator

unless that owner-operator is a licensed contractor and is also an approved Subcontractor or recognized lower tier Sub-subcontractor. The Contractor shall submit the "Owner-Operator Listing Statement of Compliance" form weekly to the City, beginning within ten (10) Calendar Days after end of the first week worked. If there is a temporary break in the Work, then the Contractor shall submit an Owner-Operator Listing marked "no Work performed." When the owner-operator is no longer needed, then the word "final" shall be placed above the name of the owner-operator.

The information shown on the Owner-Operator Listing will be used to determine the hourly wage rate due by deducting the prevailing equipment rental rate as set forth in the California Department of Transportation publication entitled "Labor Surcharge and Equipment Rental Rates" from the gross hourly rate shown on the owner-operator listing (without mark-up). The determined hourly wage will be compared to the prevailing wage rate, plus fringe benefits, for the applicable craft or classification determine compliance.

The following factors are considered when determining whether an owner-operator is an independent contractor or an employee of the Contractor:

(1) If review of payroll records show that deductions for social security taxes or State unemployment insurance taxes are withheld for the owner-operator, it is an indication that the operator is an employee rather than an independent contractor.
(2) An employee interview of the owner-operator indicates that the owner-operator is in fact an employee.
(3) Truck owner-operators should be the registered owner of the vehicle. The name of the driver should match the name of the registered owner on the Department of Motor Vehicle's registration.
(4) If the legal owner is a firm or corporation, and the firm or corporation name is shown on the vehicle registration slip, the driver shall furnish evidence that they are leasing or purchasing the vehicle. If the owner-operator is unable to substantiate purchase or lease of the equipment, the City will disallow use of the owner-operator classification for this truck. Insurance for the vehicle shall be carried in the driver's name. The California identification (CA) number issued by the California Highway Patrol (CHP) shall be in the driver's name.

If the equipment owner-operator owns, is leasing, or financing the equipment other than a truck, then the operator shall furnish such evidence. If the owner-operator is unable to substantiate that they own, are purchasing, or leasing the equipment, the Engineer will disallow use of the owner-operator classification for the equipment. The Contractor must establish proof of ownership in cases where there is doubt as to the validity of the owner-operator designation.

5-1.31 JOBSITE APPEARANCE

Add the following at the end of Section 5-1.31:

Materials shall not be stored in the right-of-way unless written permission is given by the Engineer.

Construction materials, stockpile and equipment shall not be stored in streets, roads, parking areas or any public right of way unless otherwise specified in the Special Provisions or approved by the Engineer. All materials or equipment not installed or used in construction shall be stored at a location approved by the Engineer. All stockpile and storage areas shall be kept

in a safe, neat, clean, and orderly fashion, and shall be restored to equal or better than original condition upon completion of work.

5-1.33 EQUIPMENT

Add the following to the end of Section 5-1.33:

The Contractor shall furnish and maintain in good condition all equipment and facilities as required for proper execution and inspection of the Work. Such equipment and facilities shall meet all requirements of Applicable Law.

The Contractor shall provide and maintain enclosed toilets for the use of employees engaged in the Work. These accommodations shall be maintained in a neat and sanitary condition, and regularly pumped out. The Contractor shall provide a hand washing facility. The Contractor shall comply with all Applicable Law pertaining to public health, sanitation and physical distancing. The Contractor shall comply with all Applicable Law pertaining to public health and sanitation.

5-1.36 PROPERTY AND FACILITY PRESERVATION

Add the following at the beginning of Section 5-1.36A:

The Contractor shall protect all Work, materials, and equipment from damage from any cause whatsoever, and shall provide adequate and proper storage facilities during the progress of the Work. The Contractor shall provide for the safety and good condition of all Work until Final Acceptance of the Work by the City, and shall replace all damaged or defective Work, materials, and equipment before requesting Final Acceptance.

The Contractor is and shall be held responsible for the protection and correction of the Work of all trades from smears, splashes, stains, or damages that might occur during the progress of the Work.

The Contractor shall remove graffiti from all Work, materials, equipment, and signs within the project. Equipment, materials, or signs containing graffiti shall not be brought to the Project. Any graffiti found on Work, materials, equipment, or signs shall be cleaned or removed from the Project within 24 hours after discovery. The cost of graffiti removal shall be borne by the Contractor as part of the Contract Price.

Add the following at the end of the first numbered list of items in Section 5-1.36A:

Special attention is directed to possible flood hazards and nuisance water such as irrigation and other runoff. The Contractor shall be responsible for all personal injuries and for all damages to any portion of the Work occasioned by the above causes and the Contractor shall make good such injuries or damages at no cost to the City prior to Final Acceptance of the Work.

At the time of Final Acceptance, structures entirely constructed under the Contract shall be free of rodents, insects, vermin, and pests. Necessary extermination work shall be arranged and paid for by the Contractor as part of the Work within the Contract Time and Contract Price, and shall be performed be a licensed exterminator in accordance with requirements of Applicable Law. The Contractor shall be liable for injury to persons or property and responsible for the elimination of offensive odors resulting from exterminating operations.

Add the following after the second paragraph of Section 5-1.36A:

In accordance with California Government Code Section 4216 et seq., when Work is to be conducted in an area which is known, or reasonably known, to contain underground utilities or subsurface improvements, the Contractor shall contact Underground Service Alert of Southern California/DigAlert at least two (3) Working Days, but not more than 14 Calendar Days, in advance of any construction activity that will or could damage or affect any underground utility or subsurface improvement, and obtain an inquiry identification number (CGC 4216). Failure to contact the notification center prohibits excavation. The Contractor shall delineate with white paint or other suitable markings the area to be excavated. The Contractor shall notify Underground Service Alert in the event of change in the Project limits or change in original Work previously shown on the Plans or indicated in the Specifications. When all Work is completed, the Contractor shall remove all markings for underground utilities.

Subsurface installations are any underground pipeline, conduit, duct, wire, or other structure, except nonpressurized sewer lines, nonpressurized storm drains, or other nonpressurized drain lines. "Approximate location of subsurface installations" means a strip of land not more than 24 inches on either side of the exterior surface of the subsurface installation. "Approximate location" does not mean depth. (CGC 4216). When the subsurface installation markings are no longer reasonably visible, the Contractor shall notify Underground Service Alert to remark those subsurface installations that may be affected by excavation to the extent necessary (CGC 4216.3(c)).

Add the following at the end of Section 5-1.36A:

In accordance with California Government Code Section 4215, if such utilities have not been identified with reasonable accuracy in the Contract Documents, the Contractor shall be compensated for the cost of locating, repairing damage not due to the failure of the Contractor to exercise reasonable care, and removing or relocating such utility facilities not indicated in the Plans and Specifications with reasonable accuracy, and for equipment on the Project necessarily idled during such Work. The Contractor shall not be assessed liquidated damages for delay in completion of the Project, when such delay was caused by the failure of the City or the owner of the utility to provide for removal or relocation of such utility facilities.

The following list of individuals or entities, which may have facilities in the area to be improved hereunder, is merely for the Contractor's information and may not be accurate or complete:

AT&T of California (formerly SBC/Pacific Bell)	800.288.2020
Box Springs Mutual Water Company	951.653.6419
Charter Spectrum (formerly Time Warner Communications)	951.406.1716
City of Moreno Valley Police Department	951.486.6700
City of Moreno Valley, Public Works Department	951.413.3100
City of Moreno Valley, PW Operations & Facilities	951.413.3160
Crown Castle (formerly Synesys)	951.264.9953
Eastern Municipal Water District	800.426.3693
Edgemont Community Services District (Albert A. Webb & Assoc.)	951.686.1070
Frontier Communications (formerly Verizon)	800.921.8101
Moreno Valley Unified School District	951.571.7500
Moreno Valley Utilities (electrical)	877.811.8700
Questar Southern Trails	714.379.3376

Riverside Transit Agency	951.684.0850
Southern California Edison Company	800.684.8123
Southern California Gas Company (Distribution)	800.427.2000
Southern California Gas Company (Transmission)	951.845.0709
Underground Service Alert	800.422.4133
United States Postal Service	951.656.3240
Val Verde Unified School District	951.940.6100
Waste Management	800.423.9986
Western Municipal Water District	951.789.5109

5-1.36C Nonhighway Facilities

Add the following after Section 5-1.36C(1):

Southern California Edison Temporary Electrical Service Connection for Construction Power

The Contractor shall apply for and pay all charges levied by Southern California Edison for rendering temporary electrical service to this Project. Charges can be obtained by contacting Southern California Edison, 26100 Menifee Road, Romoland, California 92585, Telephone 951.928.8288. The foregoing address and telephone number are for informational assistance only and may not be accurate or complete.

5-1.37 MAINTENANCE AND PROTECTION

Add the following at the end of Section 5-1.37A:

Damaged traffic signal loop detectors must be replaced within 72 hours.

5-1.43 POTENTIAL CLAIMS AND DISPUTE RESOLUTION

Delete Section 5-1.43 in its entirety and substitute the following:

5-1.43 CLAIMS AND DISPUTE RESOLUTION

5-1.43.1 Public Contract Code Section 9204 Claims Process

This section is intended to comply with the Provisions of Public Contract Code section 9204 pertaining to Claim resolution.

Click the following link for the full text of Public Contract Code Section 9204:

Public Contract Code Section 9204

5-1.43.2 Definition of Claim

The term “Claim” means a separate demand by Contractor sent by registered mail or certified mail with return receipt requested, for one or more of the following:

(1) An extension of the Contract Time, including relief from damages or penalties assessed by City for delay;
(2) Payment by City of money or damages arising from Work done by or on behalf of Contractor pursuant to this Contract and payment that is not otherwise expressly

provided for in the Contract Documents, or to which Contractor is not otherwise entitled;

(3) Payment of an amount the payment of that is disputed by the City; or

(4) An assertion by Contractor that Contractor's performance is excused because of the acts or omissions of City.

The term "Claim" does not include, and the Claims procedures provided under this Section do not apply to, the following:

(1) Penalties, forfeitures or other remedies prescribed by statute or ordinance which a City is specifically authorized to administer, including revocation of prequalification status, barring a bidder from County contracts; however, statutory penalties sought against County, such as Public Contract Code sections 7107 or 20104.50, are considered Claims.

(2) Personal injury, death, reimbursement, or other demands for compensation arising out of or resulting from liability for personal injury or death.

(3) The City's determination of whether the Work complies with the Contract Documents, or concerning a latent defect, breach of warranty, or guarantee to repair.

(4) Stop payment notices.

(5) City's rights under the Contract Documents including, but not limited to, rights of indemnification, termination, and any claims asserted by City against Contractor.

5-1.43.3 Accrual of Claim

1. Changes. When Contractor has a claim for an increase in the Contract Sum or Contract Time due to a scope change which has not yet become final, a "claim" will be deemed to arise once the Engineer has issued a written decision: (a) denying, in whole or in part, Contractor's change order proposal request; (b) denying Contractor costs or time extension arising from a Construction Change Directive; or (c) issuing of Disputed Work Directive.

2. Other Claims/Notice of Intent to File. In the case of a claim by Contractor that does not involve a scope change or extension of the Contract Time and which has not become final, the Claim may be asserted if, and only if, Contractor gives written notice to City of intent to file the Claim within seven (7) calendar days of the date of discovery relative to such circumstances (even if Contractor has not yet been damaged or delayed). Such written notice of intent to file a Claim shall be valid if, and only if, it identifies the event or condition giving rise to the Claim, states its probable effect, if any with respect to Contractor's entitlement to an adjustment of the Contract Sum or Contract Time and complies with the requirements for delays and as set forth below. For purposes of this paragraph, a claim for which such written notice is required and has been given by Contractor shall be deemed to arise on the date that such valid initial written notice is received by City.

FAILURE BY CONTRACTOR TO SUBMIT A NOTICE OF INTENT TO FILE CLAIM IN ACCORDANCE WITH THIS SUBSECTION SHALL CONSTITUTE A WAIVER BY CONTRACTOR OF THE RIGHT TO FURTHER RECOURSE OR RECOVERY UPON SUCH CLAIM.

5-1.43.4 Content of Claims. A Claim must include the following:

1. a statement that it is a Claim and a request for a decision on the Claim;

2. a detailed description of the act, error, omission, unforeseen condition, event or other circumstance giving rise to the Claim;
3. supporting documentation as follows: (a) if the Claim involves a Change, documentation demonstrating that a complete Change Order Proposal Request was timely and properly submitted; (b) if the Claim involves an adjustment to the Contract Time, documentation demonstrating that a complete Notice of Delay and Request for Extension were timely and properly submitted, a precedence diagrammatic-style (CPM) schedule analysis identifying delays to the Work on the critical path as well as the circumstances of the delay, cause of the delay, the measures taken to prevent or minimize the delay, the length of time extension requested and the impact of the time extension requested, and, if applicable, the direct costs attributable to Owner-caused delay; (c) for all other Claims, documentation demonstrating that a notice of intent to file the Claim was timely and properly submitted as required;
4. a detailed justification for any remedy or relief sought by the Claim, including, without limitation, all of the following: (a) a detailed cost breakdown in the form required for submittal of Change Order Requests, and (b) job cost records substantiating the actual costs that have been incurred; and
5. a written certification, signed by a responsible managing officer or principal of Contractor's organization who has the authority to sign contracts on behalf of Contractor and who has personally investigated the matters alleged in the Claim, in the following form:

"I hereby certify under penalty of perjury that I am a managing officer or principal of (Contractor) and that I have reviewed the Claim presented herewith on Contractor's behalf and/or on behalf of (Subcontractor(s)) and that the following statements are, to the best of my knowledge after diligent inquiry into the circumstances of such Claim, true and correct:

(i) the facts alleged in or that form the basis for the Claim are true and accurate;

(ii) I do not know of any facts or circumstances, not alleged in the Claim, that by reason of their not being alleged render any fact or statement alleged in the Claim materially misleading;

(iii) I have, with respect to any request for money or damages alleged in or that forms the basis for the Claim, reviewed the job cost records (including those maintained by Contractor and by any Subcontractor, of any Tier, that is asserting all or any portion of the Claim) and confirmed with reasonable certainty that the losses or damages alleged to have been suffered by Contractor and/or such Subcontractor were in fact suffered in the amounts and for the reasons alleged in the Claim;

(iv) I have, with respect to any request for extension of time or claim of delay, disruption, hindrance or interference alleged in or that forms the basis for the Claim, reviewed the job schedules (including those maintained by Contractor and by any Subcontractor, of any Tier, that is asserting all or any portion of the Claim) and confirmed that the delays or disruption alleged to have been suffered by Contractor and/or such Subcontractor were in fact experienced for the durations, in the manner, and with the

consequent effects on the time and/or sequence of performance of the Work, as alleged in the Claim; and,

(v) Contractor has not received payment from County for, nor has Contractor previously released County from, any portion of the Claim.

Signature: _____
Name: _____
Title: _____
Company: _____
Date: _____

5-1.43.5 Waiver of Claims for Noncompliance

Failure by Contractor to comply with the statement above, shall give City the right, without obligation, to deny the Claim or return the Claim without any response.

5-1.43.6 Submission of Claims

1. Time for Filing. All Claims and supporting documentation and certifications required to be submitted by Contractor must be submitted to the City within thirty (30) days after accrual the Claim, as defined in Section 2-11.3, above. No Claims by Contractor are permitted after final payment.
2. Condition Precedent. Contractor's strict compliance with the requirements of this as to a Claim shall be considered a condition precedent to Contractor's right to initiate or seek determination of its rights in any legal proceedings with respect to such Claim.

5-1.43.7 Owner's Receipt of a 9204 Claim; Governing Body Approval; Payment of Undisputed Amount

(A) 9204 Claim by Contractor shall be deemed to be made on the date that valid written notice is received by City as evidenced by the return receipt issued by the United States Postal Service. Contractor shall promptly provide Owner with a copy of the return receipt of the 9204 Claim.

(B) Upon receipt of a 9204 Claim, the City shall conduct a reasonable review of the 9204 Claim and, within a period not to exceed 45 days, shall provide the Contractor a written statement identifying what portion of the 9204 Claim is disputed and what portion is undisputed. Upon receipt of a 9204 Claim, City and Contractor may, by mutual agreement, extend the time period provided in Public Contract Code Section 9204(d).

(C) If the City needs approval from its governing body to provide the Contractor a written statement identifying the disputed portion and the undisputed portion of the 9204 Claim, and the governing body does not meet within the 45 days or within the mutually agreed to extension of time following receipt of a 9204 Claim sent by registered mail or certified mail, return receipt requested, the City shall have up to three days following the next duly publicly noticed meeting of the governing body after the 45-day period, or extension, expires to provide the Contractor a written statement identifying the disputed portion and the undisputed portion.

(D) Any payment due on an undisputed portion of the 9204 Claim shall be processed and made within 60 days after the Owner issues its written statement. If the Owner fails to issue a written statement, Section 15.1.11 shall apply.

5-1.43.8 Informal Conference to Meet and Confer; Nonbinding Mediation

(A) If the Contractor disputes the City's written response, or if the City fails to respond to a 9204 Claim within the time prescribed, the Contractor may demand in writing an informal conference to meet and confer for settlement of the issues in dispute. Upon receipt of a demand in writing sent by registered mail or certified mail, return receipt requested, the City shall schedule a meet and confer conference within 30 days for settlement of the dispute.

(B) Within 10 business days following the conclusion of the meet and confer conference, if the 9204 Claim or any portion of the 9204 Claim remains in dispute, the City shall provide the Contractor a written statement identifying the portion of the claim that remains in dispute and the portion that is undisputed. Any payment due on an undisputed portion of the claim shall be processed and made within 60 days after the City issues its written statement. Any disputed portion of the 9204 Claim, as identified by the Contractor in writing, shall be submitted to nonbinding mediation, with the City and the Contractor sharing the associated costs equally. The City and Contractor shall mutually agree to a mediator within 10 business days after the disputed portion of the 9204 Claim has been identified in writing. If the parties cannot agree upon a mediator, each party shall select a mediator and those mediators shall select a qualified neutral third party to mediate with regard to the disputed portion of the 9204 Claim. Each party shall bear the fees and costs charged by its respective mediator in connection with the selection of the neutral mediator. If mediation is unsuccessful, the parts of the 9204 Claim remaining in dispute shall be subject to applicable procedures outside Public Contract Code section 9204.

(C) For purposes of a 9204 Claim, mediation includes any nonbinding process, including, but not limited to, neutral evaluation or a dispute review board, in which an independent third party or board assists the parties in dispute resolution through negotiation or by issuance of an evaluation. Any mediation utilized shall conform to the timeframes in Public Contract Code section 9204.

(D) Unless otherwise agreed to by the City and the Contractor in writing, the mediation conducted pursuant to Public Contract Code section 9204 shall excuse any further obligation under Section 20104.4 to mediate after litigation has been commenced.

(E) Public Contract Code Section 9204 does not preclude Owner from requiring arbitration of disputes under private arbitration or the Public Works Contract Arbitration Program, if mediation under Public Contract Code section 9204 does not resolve the parties' dispute.

5-1.43.9 City Failure to Respond to Claim is Deemed Rejected

Failure by the Owner to respond to a 9204 Claim from Contractor within the time periods described Public Contract Code Section 9204 shall result in the 9204 Claim being deemed rejected in its entirety. A 9204 Claim that is denied by reason of the Owner's failure to have responded to a 9204 Claim, or its failure to otherwise meet the time requirements of Public Contract Code section 9204, shall not constitute an adverse finding with regard to the merits of the 9204 Claim or the responsibility or qualifications of the Contractor.

5-1.43A Public Contract Code Sections 20104–20104.6 ("Article 1.5") Resolution of Construction Claims

Click the following link for the full text of Article 1.5:

Article 1.5

5-1.43B Notice of Third Party Claims

The Engineer shall provide Contractor with prompt written notice of the receipt of any third-party claim relating to the Contract by sending a copy of the third-party claim to Contractor at the address indicated in the Agreement.

5-1.43C Litigation

Any Claim, dispute, or other matter in question arising out of or related to the Contract or Project that cannot be resolved between the Parties through negotiation or mediation shall be resolved by a court of competent jurisdiction in the State of California.

5-1.43D Government Code Claims

Nothing in the Contract, including this Article 15, waives or modifies Contractor's obligation to present a timely Claim under Government Code Section 900 et seq. Notwithstanding Contractor's participation in dispute resolution proceedings or other Claims procedures under the Contract, such proceedings are in addition to Contractor's obligation to present a written Government Code claim, which is a prerequisite to filing a lawsuit for money or damages against Owner.

5-1.46 FINAL INSPECTION AND CONTRACT ACCEPTANCE

Delete Section 5-1.46 in its entirety and substitute the following:

Final Acceptance of the Work by the City shall not occur until the California Department of Transportation has made its final inspection and determines that the Work has been fully completed in compliance with the Contract Documents and all Applicable Laws including, but not limited to, correction or completion of all Punch List items.

The Contractor understands that Final Acceptance does not generally occur for one to two (1-2) weeks after Final Completion. Final Completion is defined the stage of performance of the Work when:

1. All Work required by the Contract Documents has been fully completed in compliance with the Contract Documents and all Applicable Laws including, but not limited to, correction or completion of all punch list items; and
2. The Contractor has delivered to the City all closeout documentation required by the Contract Documents, including, but not limited to:

    a. Duly completed and executed forms of Conditional Waiver and Release on Final Payment and Declaration to Procure Final Payment from Contractor, Subcontractors of any tier, suppliers, and other persons eligible to file stop notices in connection with the Work, covering the final payment period;

b. Duly completed and executed forms of Unconditional Waiver and Release on Final Payment and Declaration to Procure Final Payment from Contractor, Subcontractors of any tier, suppliers, and other persons eligible to file stop notices in connection with the Work, covering the previous payment period;
c. Record Drawings / As-Built Drawings;
d. Consent of surety(ies) to final payment;
e. Special warranties, if applicable;
f. Operation and maintenance manuals and/or training manuals, if applicable; and
g. Any other documentation required by the Specifications.

5-1.47 GUARANTEE

Delete Section 5-1.47 in its entirety and substitute the following:

The Contractor warrants to the City that materials and equipment furnished under the Contract will be of good quality and new unless the Contract Documents require or permit otherwise. The Contractor further warrants that the Work will conform to the requirements of the Contract Documents and will be free from defects. Work, materials, or equipment not conforming to these requirements, including "Or Equal" substitutions not properly approved and authorized, may be considered defective. The Contractor's warranty excludes remedy for damage or defect caused by abuse, alterations to the Work not executed by the Contractor, improper or insufficient maintenance, improper operation, or normal wear and tear and normal usage. If required by the Engineer, the Contractor shall furnish satisfactory evidence as to the kind and quality of materials and equipment. The Contractor's Performance Bond surety shall be liable for breaches of these warranties and the correction guarantees described herein.

In addition to the Contractor's obligations described above, if, within **one (1) year** after the date of Final Acceptance or designated portion thereof, or by terms of an applicable special warranty required by the Contract Documents, any of the Work is found to be not in accordance with the requirements of the Contract Documents, the Contractor shall, at its own expense, correct it promptly after receipt of written notice from the City to do. Such correction shall consist of making any repair or replacement necessary, including repair of settled backfill and resurfacing. In addition, the Contractor shall pay administrative costs related to inspection, testing, Contract administration, and attorneys' fees incurred to bring the Work to full compliance with the Contract Documents. If the Contractor fails to make such correction promptly, the City may, at its sole option, with its own or outside forces, correct the deficiencies. In such case, an appropriate Change Order or Construction Change Directive shall be issued deducting from payments then or thereafter due the Contractor the reasonable cost of correcting such deficiencies, including compensation for the additional services and expenses made necessary by the failure of the Contractor to correct the deficiencies. If payments then or thereafter due the Contractor are not sufficient to cover such amounts, the City shall invoice the Contractor for the difference and the Contractor shall pay the difference to the City, immediately.

During the one-year correction guarantee period, the Contractor shall act on all regular complaints within 48 hours and immediately for emergency repairs. The City will not be required to call subcontractors, suppliers, or manufacturers directly.

During corrective work, provide the same insurance specified before Contract Acceptance.

The one-year period for correction of Work shall be extended by corrective Work performed by the Contractor (i.e., the one-year correction period will re-start upon completion of corrective Work).

This Section does not in any way limit the warranty on any items for which a longer warranty is specified or on any items for which a manufacturer gives a guarantee for a longer period. The Contractor shall furnish to the City all appropriate warranty or guarantee certificates, as required, upon completion of the Project.

If, in the opinion of the Engineer, defective or non-conforming Work creates a dangerous condition or requires immediate correction or attention to prevent further loss to the City or to prevent interruption of operations of the City, the City will attempt to give the notice required by this Subsection of the City Special Provisions. If the Contractor cannot be contacted or does not comply with the Engineer's request for correction within a reasonable time as determined by the Engineer, the City may, in accordance with this Subsection of the City Special Provisions, proceed to make such correction or provide such attention, and the costs of such correction or attention shall be charged against the Contractor. Such action by the City will not relieve the Contractor of the guarantees provided in this Subsection of the City Special Provisions or elsewhere in the Contract Documents.

Nothing contained in this Section shall be construed to establish a period of limitation with respect to other obligations the Contractor has under the Contract Documents. Establishment of the one-year period for correction of Work as described in herein relates only to the specific obligation of the Contractor to correct the Work, and has no relationship to the time within which the obligation to comply with the Contract Documents may be sought to be enforced, nor to the time within which proceedings may be commenced to establish the Contractor’s liability with respect to the Contractor’s obligations other than specifically to correct the Work.

6 CONTROL OF MATERIALS

6-1.01 GENERAL

Add the following at the end of Section 6-1.01:

Nothing in the Contract shall be construed as vesting in the Contractor any right, title or interest in material used in the Work after it has been attached or affixed to the Work or the soil. All such material shall become the property of the City upon being so attached or affixed.

6-1.03 LOCAL MATERIALS

Add the following at the end of Section 6-1.03:

6-1.03A Borrow, Disposal and Material Sites

The operation of any borrow or disposal sites used by the Contractor to produce or dispose of material for this project shall comply with the requirements, in the State Standard Specifications and these Special Provisions. All provisions for water pollution, air pollution, and sound control that apply within the limits of the Contract shall apply to all borrow or disposal sites utilized by the Contractor.

The number of Working Days allowed for this Project includes time to remove equipment, if required, and to restore the borrow site to its natural condition, and no additional time will be allowed therefore.

If the Contractor obtains the necessary permits for borrow, disposal or material sites from the City or county having jurisdiction or from the appropriate pollution control boards and such permits contain requirements which conflict with the requirements in the second, third and fourth paragraphs of this Section, the requirements of the permits shall govern over the conflicting requirements of this Section.

Full compensation for complying with the requirements for borrow, disposal and material sites in this section shall be included in the Contract prices paid for the items of work which require the use of the sites and no additional compensation will be allowed therefore.

6-1.04C Steel and Iron Materials

Add the following at the end of Section 6-1.04C:

6-1.04C(1) Gray Iron Castings

Gray iron castings shall be true to pattern in form and dimension and free from defects that would affect the service value of the casting. Minor defects may be repaired with Engineer approval. Castings that have been repaired without the permission of the Engineer may be rejected. Castings that show injurious defects revealed by X-ray or machining operations will be rejected. The casting shall be filleted boldly at angles, and the rises shall be sharp and true.

The foundry identifying mark, heat number, and dates shall be cast on the inside of the manhole frame, and on the bottom of the cover. Manhole frames and covers shall have the country of origin cast on the top, and be in compliance with Federal regulations. The castings

shall be free from cracks, blowholes, or other imperfections, straight, true to pattern, and have a uniform finish. The cover shall fit firmly into the frame without rocking, with the frame placed so that the cover is flush with the finished paving. Covers shall be cast with the letter “D” for storm drain, “S” for sewers, or the agency identification that owns the facility in accordance with the agency’s standard, requiring lettering or identification on the top of the cover. Before the castings are removed from the foundry, they shall be thoroughly cleaned and the parting lines, grates, and risers ground flush.

All castings shall conform to ASTM A 48, Class 30B (proof load test 28,600 pounds minimum), for non-traffic loads such as catch basins, under sidewalk drains, and tree well gratings. Manhole frames, covers, and other castings for traffic loads shall conform to ASTM A 48, Class 35B or better (proof load of 40,700 pounds minimum).

Gray iron castings (manhole frame and cover) test shall be a proof-load test. The Engineer shall be notified and may be present during the proof-load test. Frames and covers and gratings selected by the Engineer shall be loaded to the proof-load specified on the Standard Plan. The loads shall be concentrated on a 230mm-by-230mm-by25mm (9-inch-by-9 inch-by-1-inch) minimum-thickness steel plate placed on a 6 mm (l/4 inch) rubber pad centered on the assembled cover or grate. The specified load shall be applied by a calibrated testing machine and held for a period of one minute. Upon removal of the load, the test specimens shall be examined for cracks and permanent deformation, either of which are cause for rejection. The testing of the specimens shall be at the Contractor's expense.

Test specimens shall be selected as follows:

(1) Two assembled test specimens shall be proof-load tested for each lot. A lot shall be defined as consisting of no more than twenty-five (25) complete units from the same foundry facility.
(2) If the tested specimens of a designated lot pass the test, all of the units of that lot shall be considered as complying with the load requirements.
(3) If either of the tested specimens of a designated lot fails to pass the test, then five (5) additional specimens from the same lot shall be selected for testing.
(4) If the five (5) additional specimens pass, the total number of that lot will be considered as complying with the requirements, except previously failed specimens.
(5) If any of the five (5) additional specimens fails to meet the load tests requirements, the entire lot shall be rejected, except those specimens that passed.

The Contractor shall supply a manufacturer's written Certification that the gray castings meet the testing requirements, including the Materials Test Data as part of the Certification.

The castings for manholes in streets and in non-paved surfaces shall be thoroughly cleaned and coated with asphaltic paint. Castings to be installed in Portland Cement Concrete shall be galvanized.

Unless otherwise called for hereinafter in these Special Provisions, all testing will be performed by the City in such number and at such locations as deemed necessary by the Engineer to insure compliance with the Plans and Specification; the cost of all initial testing will be borne by the City; the cost of all retesting will be borne by the Contractor, and the amount due the City for said retesting will be deducted from the Contractor's progress payments. Source inspection will be performed by Caltrans.

6-1.04C(2) Slag Aggregate

Aggregate produced from slag resulting from any steel making process or from air cooled iron blast furnace slag shall not be used on this Project.

6-1.05 SPECIFIC BRAND OR TRADE NAME AND SUBSTITUTION

Add the following at the end of Section 6-1.05:

Within ten (10) calendar days after the award of Contract, the Contractor shall, at his expense, submit a written request to the Engineer for each desired substitution, accompanied by: (1) complete descriptive information from the manufacturer, (2) samples as requested by the Engineer, (3) complete detailed test results from a licensed independent testing laboratory of the City's choice, if requested by the Engineer, and (4) if requested by the Engineer, an evaluation report from a qualified licensed professional engineer, all for the final evaluation by the Engineer. If, in the Engineer's opinion, the request substitution is of lesser quality and/or at variance with that specified, or if the information submitted is insufficient or incomplete, the requested substitution will be disallowed and the specified material and/or equipment shall be furnished. No requests for substitution submitted after the ten (10) day deadline specified above will be considered.

In accordance with Public Contract Code Section 3400, the City may describe in the Notice Inviting Bids a finding that a particular material, product, thing, or service is designated by specific brand or trade name for any of the following purposes:

.1 In order that a field test or experiment may be made to determine the product's suitability for future use.
.2 In order to match other products in use on a particular public improvement either completed or in the course of completion.
.3 In order to obtain a necessary item that is only available from one source.

a. In order to respond to an emergency declared by a local agency, but only if the declaration is approved by a four-fifths vote of the City Council.
b. In order to respond to an emergency declared by the State, a State agency, or political subdivision of the State, but only if the facts setting forth the reasons for the finding of the emergency are contained in the public records of the City Council.

6-2 QUALITY ASSURANCE

6-2.01A General

Delete the last paragraph and table at the end of Section 6-2.01A and add the following:

Whenever a reference is made in the Specifications to any of the California Test numbers specified below, the corresponding ASTM Designation or AASHTO Designation test numbers may be used to determine the quality of materials.

Name	California Test	ASTM Designation	AASHTO Designation
Relative Compaction Soil/AGG	216	D 1557	T 180
Relative Compaction Nuclear	231	D 2922(a)	T 238(a)
Mechanical Analysis of Soil	203	D 422	T 88
Plasticity Index	204	D4318	T 89 & T 90
PCC Air Content	504	C 231	T 152
PCC Unit Weight	518	C 138	T 121
PCC Compressive Strength	521	C 39	T 22
PCC Flexural Strength	523	C 293 & C 78	T 177 & T97
PCC Ball Penetration	533	C 360	-------
L.A. Rattler	211	C 131 & C535	T 96

Note: When ASTM Designation: D 2922 or AASHTO Designation: T 238 is used, the frequency and areal distribution of such tests shall comply with the requirements specified in California Test 231. For each determination of relative compaction by ASTM or AASHTO test methods, laboratory compaction tests per ASTM Designation: D 1557 or AASHTO Designation: T 180 shall be performed, except when the use of previous laboratory maximum dry densities are allowed. Previous laboratory maximum dry densities may be used to determine relative compaction if the material, as determined by the Engineer, is from the same general excavation or plant source and has the same visual characteristics of color, gradation, and soil classification as the previous laboratory maximum dry densities. The use of previous laboratory maximum dry densities will not be permitted for more than five (5) working days or for more than fourteen (14) determinations of relative compaction.

Add the following to the end of Section 6-2.01A:

Should the Contractor elect to continue construction after a Stop Work Notice is issued, the City shall reject all work completed after the Stop Work Noticed issuance and the City will not be responsible for payment of the work; and/or the City shall require the Contractor to remove and replace all work completed, fully at the Contractor's cost after the Stop Work Notice issuance.

Inspection of the Work shall not relieve the Contractor of any of his obligations to fulfill the Contract. The Engineer shall have authority to stop Work whenever provisions of Contract Documents are not being complied with and such noncompliance is discovered. Contractor shall remedy defective Work and the City may reject unsuitable materials, even if such defective Work or materials have been previously approved by the Engineer or included in the quantities for progress payments. The Engineer cannot authorize deviations from the Plans and Specifications, and does not have the authority to obligate the City financially.

If any Work is concealed or performed without the requisite inspection notice, then the Work shall be subject to such tests or exposure as may be necessary to prove to the Engineer that the materials used and the Work performed are in conformity with the Plans and Specifications, or said materials or Work may be removed and installed or performed again at the discretion of the City Engineer. All labor, equipment and materials necessary for exposing, testing

or complete removal, and installation or replacement shall be furnished by the Contractor at its own expense. The Contractor shall replace, at its own expense, any materials or Work damaged by exposure or testing.

Cost of rework inspection incurred by the City will be deducted from the Contract Price via Change Order. Rework inspection cost is as follows:

(1) Contractor's failure to complete the Work within the Contract Time, including any previously authorized extensions thereof.
(2) Extra inspections required for Contractor's correction of defective Work.
(3) Overtime costs for acceleration of work done for Contractor's convenience.
(4) **All associated costs including travel.**

7 LEGAL RELATIONS AND RESPONSIBILITY TO THE PUBLIC

7-1.02 LAWS

Delete the second sentence of Section 7-1.02A and add the following:

See the Agreement regarding indemnification.

Add the following at the end of Section 7-1.0A1:

If the Contractor observes that any portions of the Contract Documents are at variance with Applicable Law, Contractor shall promptly notify the Engineer in writing by RFI. If the Contractor performs any Work when the Contractor knows or should have reasonably known it would be contrary to Applicable Law, Contractor shall assume full responsibility therefor and shall bear all risks and costs (without adjustment to the Contract Price) directly or indirectly attributable to the correction of the Work. If Contractor fails to comply with Applicable Law, the City may (without prejudice to any of its other rights and remedies) issue an order suspending all or any part of the Work. If the Contractor is prevented, in any manner, from strict compliance with the Contract Documents due, directly or indirectly, to Applicable Law, the Contractor shall immediately notify the Engineer.

7-1.02K PAYMENT OF PREVAILING WAGES AND EMPLOYMENT OF APPRENTICES

Delete Section 7-1.02K in its entirety and substitute the following:

7-1.02K Payment of Prevailing Wages and Employment of Apprentices

7-1.02K(1) Determination of Prevailing Wage Rates

a. The City has determined that the Contractor and Subcontractors of any tier must pay not less than the prevailing wage rates to all workers employed in execution of the Contract. The Director of the Department of Industrial Relations, State of California (DIR) pursuant to the California Labor Code, and the United States Secretary of Labor ("Secretary") pursuant to the Davis-Bacon Act have determined the general prevailing rates of wages in the locality in which the Work is to be performed. The City has obtained from the Director of the Department of Industrial Relations (DIR). Copies of said rates are on file with the Capital Projects Division of the City and will be made available for inspection during regular business hours and are also available on the Internet at the California Department of Industrial Relations website: http://www.dir.ca.gov/dlsr/DPreWageDetermination.htm Future effective general prevailing wage rates, which have been predetermined and are on file with the California Department of Industrial Relations are referenced but not printed in the general prevailing wage rates..

b. The wage rate for any classification not listed, but which may be required to execute the Work, shall be commensurate and in accord with specified rates for similar or comparable classifications for those performing similar or comparable duties. Holidays shall be as defined in the collective bargaining agreement applicable to each particular craft, classification or type of worker employed under the Contract. Per diem wages include employer payments for health and welfare, pensions, vacation, travel time and subsistence pay, apprenticeship or other training programs authorized by California Labor Code § 3093, and similar purposes when the term "per diem wages" is used herein. Holiday and overtime work, when permitted by law, must be paid for at the rate of at least one and one-half (1½) times the above specified rate of per diem

wages, unless otherwise specified. In accordance with Section 1773.2 of the California Labor Code, the Contractor must post a schedule showing all applicable prevailing wage rates at appropriate and conspicuous locations on the job site where they can easily be seen by workers.

c. Contractor is required to utilize apprentices as required by the California Labor Code and applicable regulations. Only apprentices, as defined in California Labor Code § 3077, who are in training under apprenticeship standards and written apprenticeship agreements under California Labor Code § 3070 *et seq*. are eligible to be employed for the Work.

7-1.02K(2) Payment of Prevailing Wage Rates

a. Statutory Requirements. The Project is subject to the provisions of Labor Code § 1720 *et seq*. and the requirements of Title 8 of the California Code of Regulations § 16000 *et seq*., which govern the payment of prevailing wage rates on public works projects, including the hauling and delivery of ready-mixed concrete. The Contractor and Subcontractors of any tier shall be governed by and required to comply with these statutes and regulations in connection with the Project. Pursuant to Labor Code § 1771, the Contractor and all Subcontractors of any tier must pay not less than the prevailing wage rates to all workers employed in execution of the Contract. Contractor and Subcontractors must comply with all applicable statutes and regulations, including, but not limited to, Labor Code §§ 1771, 1775, 1777.5, 1813, and 1815.

b. Weekly Payments to Employees. Contractor and all Subcontractors of any tier must pay each worker on the Project, unconditionally and not less often than once each week, the full amounts that are due and payable for the period covered by the particular payday in accordance with the prevailing wage scale determination, regardless of any contractual relationship which may be alleged to exist between the Contractor, Subcontractor, and such laborers. Thus, an employer must establish a fixed workweek and an established payday. On each payday, each worker must receive all sums due at the end of the preceding workweek and must be provided with an itemized wage statement.

c. Classifications. The City shall require that any class of laborers or mechanics, including apprentices and trainees, which are not listed in the General Wage Determinations and which are to be employed under this Contract, shall be classified conformably to such wage determinations. In the event the City does not concur in the Contractor's proposed classification or reclassification of a particular class of laborers and mechanics (including apprentices and trainees) to be used, the question, accompanied by the recommendation of the City, shall be referred to the State Director of Industrial Relations for determination.

d. Fringe Benefit Cash Equivalent. The City shall require, whenever the minimum wage rate prescribed for a class of laborers or mechanics includes a fringe benefit which is not expressed as an hourly wage and the Contractor is obligated to pay a cash equivalent of such a fringe benefit, an hourly cash equivalent thereof must be established. In the event the interested parties cannot agree upon cash equivalent of the fringe benefit, the questions, accompanied by the recommendation of the City, shall be referred to the State Director of Industrial Relations for determination.

7-1.02K(3) Penalty for Prevailing Wage Rate Underpayment

Pursuant to Labor Code § 1775, the Contractor must, as a penalty, forfeit up to Two Hundred Dollars ($200.00) to the State or the Owner for each Calendar Day or portion thereof, for each worker paid less than the prevailing wage rates as determined by the Director of the

Department of Industrial Relations for such work or craft in which such worker is employed for the Work by the Contractor or by any Subcontractor, of any tier, in connection with the Work. The difference between prevailing wage rates and the amount paid to each worker each Calendar Day, or portion thereof, for which each worker paid less than the prevailing wage rate, must be paid to each worker by the Contractor.

7-1.02K(4) Withholding

The City shall upon its own action or upon written request of an authorized representative of the Department of Labor or DIR, withhold or cause to be withheld from the Contractor under this Contract so much of the accrued payments or advances as may be considered necessary to pay laborers and mechanics, including apprentices, trainees, and helpers, employed by the Contractor or any Subcontractor the full amount of wages required by the Contract. In the event of failure to pay any laborer or mechanic, including any apprentice, trainee, or helper, employed or working on the site of the Work, all or part of the wages required by the Contract, the City may, after written notice to the Contractor, take such action as may be necessary to cause the suspension of any further payment, advance, or guarantee of funds until such violations have ceased.

7-1.02K(5) Certified Payroll Records and Basic Payroll Records

The Contractor and Subcontractors of any tier must maintain Certified Payroll Records and "Basic Payroll Records," defined as time cards, front and back copies of canceled checks, cash receipts, trust fund forms, daily logs, employee sign-in sheets, accounting ledgers, tax forms and/or any other record maintained for the purposes of reporting payroll, during the course of the Work and must preserve them for a period of **three (3) years** after completion of the Project for all tradesworkers executing the Work of the Contract. Certified Payroll Records must be submitted at the times designated in **Section 7-1.02K(6)** below or upon request as described in **Section 7-1.02K(7)** below. The City reserves the right to require Contractor to routinely submit Basic Payroll Records may be requested by the City at any time and must be provided within **ten (10) Calendar Days** following the receipt of the request.

7-1.02K(6) Submittal of Certified Payroll Records

Pursuant to Labor Code § 1776, the Contractor and each Subcontractor of any tier must maintain an accurate, weekly payroll record showing the employee full name, address, social security number, work classification, amount paid per hour, straight time, overtime and holiday hours worked each day and weekly totals, the actual per diem wages paid to each person employed for the Work, and the gross/net wages paid for this Project/all projects, as well as the Contractor name and address, Project name and location, and dates of payroll. If payments are made to any third party trust, funds or plans for health and welfare, pension or vacation trusts, those payments must be stated on the Certified Payroll Record. The basic wage rate paid per hour plus the employer contributions for benefits, including training fund contributions, must at least equal the prevailing wage rate for that classification.

The Contractor must maintain and submit one (1) hard copy (not electronic) of its Certified Payroll Records and those of its Subcontractors weekly with Contractor's application for payment. The City requires Contractor to submit to the City each week, no later than seven (7) Calendar Days after the payday for the week covered, the Certified Payroll Records of Contractor and its Subcontractors of every tier. If there is no Work on a given week or on a given day, the Certified Payroll Record must indicate "no work" for that week or day(s). The Certified Payroll Records

must account for each day of the week including Saturdays, Sundays and holidays. Contractor and Subcontractors of every tier must write “final” on the last submitted Certified Payroll Record for the Project.

The Certified Payroll Records must be verified by a written declaration made by a person with authority to represent the reporting entity, under penalty of perjury, that the information contained in the payroll record is true and correct and that the reporting entity has complied with the requirements of California Labor Code §§ 1771, 1811, and 1815 for any Work performed by his, her or its employees on the Project.

In addition, the City reserves the right to require the Contractor to provide monthly certified payroll records of local hiring and non-local hiring to ascertain local participation and shall allow the City and City’s staff to conduct onsite visits upon request to ascertain local hiring participation.

Contractor agrees that submission of Certified Payroll Records as well as all related or subsequent requests for supporting document made by the City shall be a condition precedent to Contractor’s receipt of a progress, final, or retention payment. The City shall withhold any portion of the progress, final, or retention payment up to and including the entire payment until the Certified Payroll Records requirement is met by the Contractor or its Subcontractor. If the Contractor or any Subcontractor is determined to have failed to pay workers in compliance with the applicable prevailing wage sections of the Labor Code, the City shall continue to withhold progress, final, or retention payments until sufficient funds have been withheld for payment of wages to workers and all applicable penalties.

7-1.02K(7) Making Certified Payroll Records Available Upon Request

Pursuant to Labor Code § 1776, in addition to its obligation to deliver certified payroll records to the Owner on a weekly basis as set forth above, the Contractor must also make payroll records available for inspection at all reasonable hours at the principal office of the Contractor on the following basis: (i) a certified copy of an employee’s payroll record must be made available for inspection or furnished to such employee or his/her authorized representative on request; (ii) a certified copy of all payroll records must be made available for inspection or furnished upon request to the Owner, the Division of Labor Standards Enforcement and the Division of Apprenticeship Standards of the Department of Industrial Relations; (iii) a certified copy of payroll records must be made available upon request to the public for inspection or copies thereof made; provided, however, that a request by the public must be made through either the City, the Division of Apprenticeship Standards, or the Division of Labor Standards Enforcement. If the requested payroll records have not been previously provided to the City, the Division of Apprenticeship Standards or the Division of Labor Standards Enforcement, the requesting party must, prior to being provided the records, reimburse the cost of preparation by the Contractor, Subcontractors and the entity through which the request was made; and the public may not be given access to such records at the principal office of the Contractor; (iv) the Contractor must file a certified copy of the payroll records with the entity that requested such records within **ten (10) Calendar Days** after receipt of a written request; and (v) any copy of records made available for inspection as copies and furnished upon request to the public or any public agency by the City, the Division of Apprenticeship Standards or the Division of Labor Standards Enforcement shall be marked or obliterated in such a manner as to prevent disclosure of an individual’s name, address and social security number. The name and address of the Contractor or any Subcontractor, of any tier, performing a part of the Work must not be marked or obliterated. The Contractor must inform the Owner of the location of payroll records, including the street address, city and county and must, within **five (5) Working Days,** provide a notice of a change or location and address.

7-1.02K(8) Forfeiture for Failure to Comply with Written Record Request Laws

The Contractor or Subcontractor shall have **ten (10) Calendar Days** in which to comply, subsequent to receipt of written request regarding Certified Payroll Records or Basic Payroll Records. In the event Contractor or a Subcontractor fails to strictly comply after such 10-day period, the Contractor or Subcontractor shall, as a penalty to the State or the Owner, forfeit One Hundred Dollars ($100.00) for each Calendar Day, or portion thereof, for each worker, until strict compliance is effectuated. Upon the request of the Division of Apprenticeship Standards or the Division of Labor Standards Enforcement, these penalties shall be withheld from any portion of the Contract Price then or thereafter due the Contractor. A Contractor is not subject to a penalty assessment pursuant to this paragraph due to the failure of a Subcontractor to comply with this section.

7-1.02K(9) Hours of Work

a. Limits on Hours of Work. Pursuant to Labor Code § 1810, eight (8) hours of labor shall constitute a legal day's work. Pursuant to Labor Code § 1811, the time of service of any worker employed at any time by the Contractor or by a Subcontractor, of any tier, upon the Work or upon any part of the Work, is limited and restricted to eight (8) hours during any one Calendar Day and forty (40) hours during any one calendar week, except as hereafter provided. Notwithstanding the foregoing provisions, Work performed by employees of Contractor or any Subcontractor, of any tier, in excess of eight (8) hours per day and forty (40) hours during any one week, shall be permitted upon compensation for all hours worked in excess of eight (8) hours per day at not less than one and one-half (1½) times the basic rate of pay.

b. Penalty for Excess Hours. Pursuant to Labor Code §§ 1813 and 1815, the Contractor shall pay to the State or the Owner a penalty of Twenty-five Dollars ($25.00) for each worker employed in the execution of the Contract by the Contractor or any Subcontractor, of any tier, for each Calendar Day during which such worker is required or permitted to work more than eight (8) hours in any Calendar Day and forty (40) hours in any one calendar week, in violation of the provisions of the California Labor Code, unless compensation to the worker so employed by the Contractor is not less than one and one-half (1½) times the basic rate of pay for all hours worked in excess of eight (8) hours per day.

c. Contractor Responsibility For Cost of Excess Hours. Any Work performed by workers necessary to be performed after regular working hours or on Sundays or other holidays must be performed without adjustment to the Contract Price or any other additional expense to the City.

7-1.02K(10) Responsibility for Subcontractors' Payment of Prevailing Wages

Pursuant to Labor Code § 1774, the Contractor is responsible for ensuring that all Subcontractors of any tier comply with requirements for payment of prevailing wages. Contractor is responsible for Labor Code violations by Subcontractors of any tier. The agreement executed between the Contractor and each Subcontractor must contain a copy of the provisions of Labor Code §§ 1771, 1775, 1777.5, 1813, and 1815, at a minimum. Contractor must monitor each Subcontractor's payment of prevailing wage rates. Upon becoming aware of the failure of any Subcontractor of any tier to pay its workers the specified prevailing wage, the Contractor must diligently take action to halt and rectify the failure, including, without limitation, retaining sufficient funds due to the Subcontractor to cover the underpayment. Before making final payment to any Subcontractor, the Contractor must obtain an affidavit from the Subcontractor, signed under

penalty of perjury, which states that the Subcontractor has paid the specified, determined prevailing wage rate to its employees for the Project, as well as any amounts due pursuant to Labor Code § 1813. Contractor must provide copies of such affidavits to the Owner and provide Contractor's affidavit that it has paid the specified, determined prevailing wage rate to its employees for the Project, as well as any amounts due under Labor Code § 1813.

7-1.02K(11) Statement of Employer Payments

Within **five (5) Calendar Days** of the City's request, the Statement of Employer Payments **(DSLE Form PW 26)** must be completed and submitted to the City by each Contractor and Subcontractor who pays benefits to a third party trust, plan or fund for health and welfare benefits, vacation funds or makes pension contributions. The form must contain, for each worker classification, the fund or trust name, address, administrator, and amount per hour contributed and frequency of contributions. Training fund contributions must also be reported on this form. In February and August of each year during the Project, the Contractor and Subcontractors of any tier must verify changes in wage rates for any trade classifications used on the Project.

7-1.02K(12) Apprentices

a. Apprenticeship Committee Contract Award Information. Pursuant to Labor Code § 1777.5 and Title 8 California Code of Regulations § 230, Contractor and Subcontractors of any tier who are not already approved to train by an apprenticeship program sponsor must, within ten (10) Calendar Days of signing the Contract or Subcontract, as applicable, but in any event prior to the first day in which the Contractor has workers employed on the Project, must submit contract award information. This information may be submitted on a Public Works Contract Award Information form (DAS form 140). The contract award information must be provided to the appropriate local apprenticeship committees whose geographic area of operation include the area of the Project and can supply apprentices to the Project.

b. Employment of Apprentices. Labor Code § 1777.5 and Title 8 California Code of Regulations § 200 *et seq*. provide detailed requirements for employing apprentices on public works. The responsibility of complying with Section 1777.5 and the regulations lies exclusively with the Contractor. When Contractor or Subcontractor employs workers in any Apprenticeable Craft or Trade, the Contractor and Subcontractor must employ apprentices in at least the ratio set forth in Labor Code Section 1777.5.

Every apprentice employed to perform any of the Work must be paid the prevailing rate of per diem wages for apprentices in the trade to which such apprentice is registered, and such individual must be employed only for the work of the craft or trade to which such individual is registered.

Only apprentices, as defined in Labor Code § 3077, who are in training under apprenticeship standards and written apprenticeship agreements under California Labor Code § 3070 et seq. are eligible to be employed for the Work. The employment and training of each apprentice shall be in accordance with either of the following:

(1) The apprenticeship standards and apprentice agreements under which such apprentice is training; or

(2) The rules and regulations of the California Apprenticeship Council, including regulations Section 230.1(c), which requires that apprentices employed on public

projects can only be assigned to perform work of the craft or trade to which the apprentice is registered and that the apprentices must at all times work with or under the direct supervision of journeyman/men.

c. Apprenticeship Certificate and Request for Dispatch of Apprentices.

(1) When the Contractor or any Subcontractor of any tier in performing any of the Work employs workers in any Apprenticeable Craft or Trade, as defined in **Section 7-1.01A(12)(d)** below, the Contractor and such Subcontractor may apply to the Joint Apprenticeship Committee administering the apprenticeship standards of the craft or trade in the area of the site of the Work for a certificate approving the Contractor or such Subcontractor under the apprenticeship standards for the employment and training of apprentices in the area or industry affected, provided, however, that the approval as established by the Joint Apprenticeship Committee or Committees shall be subject to the approval of the Administrator of Apprenticeship. The Joint Apprenticeship Committee or Committees, subsequent to approving the Contractor or Subcontractor, shall arrange for the dispatch of apprentices to the Contractor or such Subcontractor in order to comply with California Labor Code § 1777.5. There shall be an affirmative duty upon the Joint Apprenticeship Committee or Committees, administering the apprenticeship standards of the crafts or trades in the area of the site of the Work, to ensure equal employment and affirmative action and apprenticeship for women and minorities. Contractors or Subcontractors shall not be required to submit individual applications for approval to local Joint Apprenticeship Committees provided they are already covered by the local apprenticeship standards.

(2) Contractors who are not already approved to train apprentices must request dispatch of required apprentices from one of the applicable Apprentices Committees whose geographic area of operation includes the site of the Project by giving the committee actual notice of at least forty-eight (48) hours (excluding Saturdays, Sundays and holidays) before the date on which one or more apprentices are required. Contractors and Subcontractors may use **DAS form 142** to make the request for apprentices. However, if a non-signatory contractor declines to abide by and comply with the terms of a local committee's standards, the Apprenticeship Committee shall not be required to dispatch apprentices to such contractor. Conversely, if in response to a written request, an Apprenticeship Committee does not dispatch any apprentice to a contractor who has agreed to employ and train apprentices in accordance with either the Apprenticeship Committee's Standards or the California Apprenticeship Counsel Regulations (Title 8, Section 230 *et seq*.) within 72 hours of such request (excluding Saturdays, Sundays and holidays) the contractor shall not be considered in violation of Section 230.1 as a result of failure to employ apprentices for the remainder of the Project, provided the contractor has made the request in enough time to meet the required ratio. If an Apprenticeship Committee dispatches fewer apprentices than the Contractor or Subcontractor requested, the Contractor or Subcontractor shall be considered in compliance if the contractor employs those apprentices who are dispatched, provided that, where there is more than one Apprenticeship Committee able and willing to unconditionally dispatch apprentices, a Contractor or Subcontractor who is not a participant in an apprenticeship program has requested dispatch from at least two committees.

d. Ratio of Apprentices to Journeymen.

(1) The ratio of Work performed by apprentices to journeymen, who shall be employed in the Work, may be the ratio stipulated in the apprenticeship standards under which the Joint Apprenticeship Committee operates, but in no case shall the ratio be less than one hour of apprentice work for every five hours of labor performed by a journeyman, except as otherwise

provided in California Labor Code § 1777.5. The ratio of apprentice work to journeyman work shall apply during any day or portion of a day when any journeyman is employed at the site of the Work and shall be computed on the basis of the hours worked during the day by journeymen so employed. Any Work performed by a journeyman in excess of eight hours per day or 40 hours per week shall not be used to calculate the ratio. The Contractor must employ apprentices for the number of hours computed as above before the end of the Contract or subcontract, as applicable. The Contractor must, however, endeavor, to the greatest extent possible, to employ apprentices during the same time period that the journeymen in the same craft or trade are employed at the site of the Work. Where an hourly apprenticeship ratio is not feasible for a particular craft or trade, the Division of Apprenticeship Standards, upon application of a Joint Apprenticeship Committee, may order a minimum ratio of not less than one apprentice for each five journeymen in a craft or trade classification.

(2) The Contractor or any Subcontractor covered by this Paragraph and California Labor Code § 1777.5, that has agreed to be covered by an Apprenticeship Program's standards, upon the issuance of the approval certificate, or that has been previously approved in such craft or trade, must employ the number of apprentices or the ratio of apprentices to journeymen stipulated in the apprenticeship standards, but in no event less than the 1-to-5 hourly ratio. Upon proper showing by the Contractor that it employs apprentices in such craft or trade in the State of California on all of its contracts on an annual average of not less than one apprentice to each five journeymen, the Division of Apprenticeship Standards may grant a certificate exempting the Contractor from the 1-to-5 hourly ratio as set forth in this Paragraph and California Labor Code § 1777.5.

e. Exemption. The requirement to employ apprentices shall not apply to contracts of general contractors, or to contracts of specialty contractors not bidding for work through a general or prime contractor, involving less than Thirty Thousand Dollars ($30,000.00) or **twenty (20) Working Days.** The term "Apprenticeable Craft or Trade," as used herein shall mean a craft or trade determined as an Apprenticeable occupation in accordance with rules and regulations prescribed by the Apprenticeship Council.

f. Contributions to Trust Funds. The Contractor or any Subcontractor of any tier who performs any of the Work by employment of journeymen or apprentices in any Apprenticeable Craft or Trade shall contribute to the California Apprenticeship Council in the same amount that the Director determines is the prevailing amount of apprenticeship training contributions in the area of the Project. Contractor or any Subcontractor, of any tier, may take as a credit for payments to the Council any amounts paid by the Contractor or Subcontractor to an approved apprenticeship program that can supply apprentices to the Project. Contractors who do not contribute to an apprenticeship program must submit their contributions to the California Apprenticeship Council. Training Fund contributions are due and payable on the 15th day of the month for work performed during the preceding month. Training contributions to the California Apprenticeship Council shall be paid by check and shall be accompanied by a **Completed Training Fund Contribution form (CAC-2).** Contractors who contribute to an apprenticeship program are entitled to a full credit in the amount of those contributions. The Division of Labor Standards Enforcement is authorized to enforce the payment of such contributions to such fund(s) as set forth in California Labor Code § 227. Such contributions shall not result in an increase in the Contract Price.

g. Contractor's Compliance. The responsibility of compliance with this Section 7-1.02K(12) for all Apprenticeable Trades or Crafts is solely and exclusively that of the Contractor. All decisions of the Joint Apprenticeship Committee(s) under this Section 7-1.01A(12) are subject

to the provisions of California Labor Code § 3081. In the event the Contractor willfully fails to comply with the provisions of this Paragraph and California Labor Code § 1777.5, pursuant to California Labor Code § 1777.7, the Contractor shall: (i) be denied the right to bid on any public works contract for a period of one (1) year from the date the determination of non-compliance is made by the Administrator of Apprenticeship; and (ii) forfeit, as a civil penalty, One Hundred Dollars ($100.00) for each Calendar Day of noncompliance. Notwithstanding the provisions of California Labor Code § 1727, upon receipt of such determination, the City shall withhold such amount from the Contract Price then due or to become due. Any such determination shall be issued after a full investigation, a fair and impartial hearing, and reasonable notice thereof in accordance with reasonable rules and procedures prescribed by the California Apprenticeship Council. Any funds withheld by the City pursuant to this Paragraph shall be deposited in the fund that funded the Project unless otherwise specified by the City Engineer. The interpretation and enforcement of California Labor Code §§ 1777.5 and 1777.7 shall be in accordance with the rules and procedures of the California Apprenticeship Council.

7-1.02K(13) Employment of Minors

The Contractor shall not employ or engage any minor less than 16 years of age for the purpose of building or construction work of any kind (Title 8 CAC 11701, LC 1294). When minors between 16 and 18 years of age are employed or engaged in building or construction work, the Contractor must obtain permits to work and permits to employ minors from school authorities in the school district in which the minor resides or attends school (ED 49110 to 49113, 49131, & 49160). Any Contractor that hires a minor of 16 years of age or older who is a high school graduate or who has been awarded a certificate of proficiency is exempt from the permit requirements (ED 49101).

The Contractor shall keep on file all permits to work and permits to employ, records showing the names, ages (dates of birth) and address of all minors employed, along with payroll records for at least three years (ED 49161, LC 1174, 1175, 1299). The minors' records are to be open at all times for inspection by school attendance officers, members of the Industrial Welfare Commission, and designees, probation officers, officers of the Superintendent at Public Instruction, and officers of the Division of Labor Standards Enforcement (ED 49164, 49181, LC 1174, 1299). The Contractor shall submit to the City a copy of Permits to Work and Permits to Employ or proof of graduation or certificate of proficiency before any minor is allowed to work.

Failure to comply with the provisions of the child labor laws may cause the imposition of criminal and civil sanctions.

7-1.02K(14) Labor Non-Discrimination

Pursuant to Labor Code Section 1735, no discrimination shall be made in the employment of persons upon public works because of the race, religious creed, color, national origin, ancestry, physical disability, mental disability, medical condition, marital status, or sex of such persons, except as provided in Section 12940 of the Government Code, and every Contractor for public works violating Labor Code Section 1735 is subject to all the penalties imposed for a violation of Division 2, Part 7, Chapter 1 of the Labor Code.

a. During the performance of this Contract, the Contractor and its Subcontractors shall not unlawfully discriminate against any employee or applicant for employment because of race, religion, color, national origin, ancestry, physical disability, mental disability, medical condition, marital status, age (over 40) or sex. Contractors and Subcontractors shall ensure that

the evaluation and treatment of their employees and applicants for employment are free of such discrimination. Contractors and Subcontractors shall comply with the provisions of the California Fair Employment and Housing Act (CGC 12900 et seq.) and the applicable regulations promulgated thereunder (California Code of Regulations, Title 2, Section 7285.0 et seq.). The applicable regulations of the Fair Employment and Housing Commission implementing Government Code Section 12990, set forth in Title 2, Division 4, Chapter 5 of the California Code of Regulations are incorporated into this Contract by reference and made a part hereof as if set forth in full. The Contractor and its Subcontractors shall give written notice of their obligations under this clause to labor organizations with which they have a collective bargaining or other agreement.

b. This Contractor shall include the nondiscrimination and compliance provisions of this Section 7-1.02K(14) in all subcontracts to perform Work under the Contract.

c. These provisions are applicable to all Contractors and Subcontractors having a construction Contract or subcontract of $5,000 or more:

(1) As used herein:

(a) "Administrator" means Administrator, Office of Compliance Programs, California Department of Fair Employment and Housing, or any person to whom the Administrator delegates authority;

(b) Minority" includes:

(i) Black (all persons having primary origins in any of the black racial groups of Africa, but not of Hispanic origin);

(ii) Hispanic (all persons of primary culture or origin in Mexico, Puerto Pico, Cuba, Central or South America or other Spanish derived culture or origin regardless of race);

(iii) Asian/Pacific Islander (all persons having primary origins in any of the original peoples of the Far East, Southeast Asia, the Indian Subcontinent or the Pacific Islands); and

(iv) American Indian/Alaskan Native (all persons having primary origins in any of the original peoples of North America and who maintain culture identification through tribal affiliation or community recognition).

2. Whenever the Contractor or any Subcontractor subcontracts a portion of the Work, it shall physically include in each subcontract of $5,000 or more, the nondiscrimination clause in this Contract directly or through incorporation by reference.

3. The Contractor shall implement the specific nondiscrimination standards provided in paragraph 6(a) through (e) of this Section 7-1.02K(14).

4. Neither the provisions of any collective bargaining agreement, nor the failure by a union with whom the Contractor has a collective bargaining agreement, to refer either minorities or women, shall excuse the Contractor's obligations under this Section 7-1.02K(14), Government Code Section 12990, or the regulations promulgated pursuant thereto.

5. In order for the nonworking training hours of apprentices and trainees to be counted, such apprentices and trainees must be employed by the Contractor during the training period, and the Contractor must have made a commitment to employ the apprentices and trainees at the completion of their training, subject to the availability of employment opportunities. Trainees must be trained pursuant to training programs approved by the U.S. Department of Labor or the California Department of Industrial Relations.

6. The Contractor shall take specific actions to implement its nondiscrimination program. The evaluation of the Contractor's compliance with this Section 7-1.02K(14) shall be based upon its effort to achieve maximum results from its actions. The Contractor must be able to demonstrate fully its efforts under steps (a) through (e) below.

(a) Ensure and maintain a working environment free of harassment, intimidation, and coercion at all sites, and at all facilities at which the Contractor's employees are assigned to work. The Contractor shall specifically ensure that all foremen, superintendents, and other on-site supervisory personnel are aware of and carry out the Contractor's obligations to maintain such a working environment, with specific attention to minority or female individuals working at such sites or in such facilities.

(b) Provide written notification within seven days to the director of DFEH when the union or unions with which the Contractor has a collective bargaining agreement has not referred to the Contractor a minority person or woman sent by the Contractor, or when the Contractor has other information that the union referral process has impeded the Contractor's efforts to meet its obligations.

(c) Disseminate the Contractor's equal employment opportunity policy by providing notice of the policy to unions and training, recruitment and outreach programs and requesting their cooperation in assisting the Contractor to meet its obligations; and by posting the company policy on bulletin boards accessible to all employees at each location where construction work is performed.

(d) Ensure all personnel making management and employment decisions regarding hiring, assignment, layoff, termination, conditions of work, training, rates of pay or other employment decisions, including all supervisory personnel, superintendents, general foremen, on-site foremen, etc., are aware of the Contractor's Equal Employment Opportunity Policy and obligations, and discharge their responsibilities accordingly.

(e) Ensure that seniority practices, job classifications, work assignments and other personnel practices, do not have a discriminatory effect by continually monitoring all personnel and employment related activities, to ensure that the equal employment related activities, the employment opportunity policy, and the Contractor's obligations under these Specifications are being carried out.

7. Contractors are encouraged to participate in voluntary associations that assist in fulfilling their equal employment opportunity obligations. The efforts of a Contractor association, joint contractor-union, contractor-community, or other similar group of which the Contractor is a member and participant, may be asserted as fulfilling any one or more of its obligations under this Section 7-1.02K(14) provided that the Contractor actively participates in the group, makes every effort to assure that the group has a positive impact on the employment of minorities and women in the industry, ensures that the concrete benefits of the program are reflected in the Contractor's minority and female workforce participation, and can provide access

to documentation which demonstrates the effectiveness of actions taken on behalf of the Contractor. The obligation to comply, however, is the Contractor's.

8. The Contractor is required to provide equal employment opportunities for all minority groups, both male and female, and all women, both minority and non-minority. Consequently, the Contractor may be in violation of the Fair Employment and Housing Act (CGC Section 12900 et seq.) if a particular group is employed in a substantially disparate manner.

9. Establishment and implementation of a bona fide Affirmative Action Plan pursuant to Title 2 California Code of Regulations Section 8104(b) shall create a rebuttal presumption that a Contractor is in compliance with the requirements of Government Code Section 12990 and its implementing regulations.

10. The Contractor shall not use the nondiscrimination standards to discriminate against any person because of race, color, religion, sex, national origin, ancestry, physical disability, mental disability, medical condition, marital status, or age over 40.

11. The Contractor shall not enter into any subcontract with any person or firm decertified from state Contracts pursuant to Government Code Section 12990.

12. The Contractor shall carry out such sanctions and penalties for violation of this Section 7-1.02K(14) and the nondiscrimination clause, including suspension, termination and cancellation of existing subcontracts as may be imposed or ordered pursuant to Government Code Section 12990, and its implementing regulations by the awarding agency. Any Contractor who fails to carry out such sanctions and penalties shall be in violation of this Section 7-1.02K(14) and Government Code Section 12900.

13. The Contractor shall designate a responsible official to monitor all employment related activity to ensure that the company's equal employment opportunity policy is being carried out, to submit reports relating to the Provisions hereof as may be required by OCP and to keep records. Records shall at least include for each employee the name, address, telephone numbers, construction trade, union affiliation, if any, employee identification number when assigned, social security number, race, sex, status, (e.g., mechanic, apprentice trainee, helper, or laborer), dates of changes in status, hours worked per week in the indicated trade, rate of pay, and locations at which the work was performed. Records shall be maintained in any easily understandable and retrievable form; however, to the degree that existing records satisfy this requirement, the Contractor shall not be required to maintain separate records.

7-1.02K(15) Posting of Signs and Employee Interviews

Contractor shall display the Project Identification Sign, the federal (if applicable) and state wage rate information, the "Equal Employment Opportunity is the Law" poster, and other required posters in a visible location at the Project site. The signs and posters shall be mounted in an acceptable manner and constructed as specified.

The Contractor and Subcontractors shall make available all employees and owner operators for labor compliance interviews during work hours. Labor compliance interviews will be conducted by the Engineer or the California Department of Industrial Relations. The interview shall be conducted on the Work site at a place and for a duration that will permit privacy for the employee and cause the least amount of disruption to the ongoing Work. The Contractor's Representative shall not be present during the interview.

Renumber the 7-1.02K sub-sections that follow.

7-1.02K(16) Occupational Safety and Health Standards

7-1.02K(16)(j)(iii) Earth Material Containing Lead

See consultant's Special Provisions 7-1.02K(6)(j)(iii)

Add the following at the end of renumbered Section 7-1.02K(16):

The Contractor shall be solely and completely responsible for the condition of the premises on which the Work is performed and for the safety of all persons and property on the site during performance of the Work. This requirement shall not be limited to normal working hours, but shall apply continuously.

The Contractor shall provide the Engineer with the Contractor's Injury and Illness Prevention Program and a site program five (5) Working Days before the pre-construction meeting. The Injury and Illness Prevention Program shall include the name and telephone number of the Project Safety Manager or Officer.

The Contractor shall correct all unsafe conditions immediately. The Engineer shall use the following guidelines when an unsafe condition is identified:

1. Imminent Hazard – a condition that if not corrected would most likely result in an accident causing severe or permanently disabling injury or death.

When an Imminent Hazard is known to exist or when the Contractor either delays in correcting or permits repeated occurrences of an Imminent Hazard, the Engineer shall immediately order the Contractor verbally and in writing to suspend the operations affected and not permit the Work to resume until the Imminent Hazard has been corrected. The Contractor shall remove all personnel not necessary to make the corrections. The local Division of Industrial Safety office will be notified of the Imminent Hazard and of the action taken.

2. Dangerous Condition (Serious Hazard) – a condition that does not present an immediate danger to workers or the public, but if not corrected, could result in a disabling injury and possible death, or could develop into an Imminent Hazard.

When a Dangerous Condition is known to exist, the Engineer shall notify the Contractor verbally and in writing of the conditions and allow a reasonable period for correcting the Dangerous Condition. The Contractor shall remove all personnel not necessary to make the corrections. If the Engineer is not certain of the remedial measures proposed or taken by the Contractor, then the City or Caltrans construction safety coordinator shall be consulted. If the Contractor does not correct the Dangerous Condition or if the condition is deteriorating into an Imminent Hazard, the Engineer shall suspend the affected operations and the local Division of Industrial Safety office will be notified.

3. Minor or Non-Serious Condition – condition that could result in minor or less serious injuries, or that are repetitive in nature or that may be classified as a threat to health.

When a Minor or Non-Serious Condition is known to exist, the Engineer shall advise the Contractor verbally and in writing of the condition and of the necessity for eliminating it. If the

Contractor fails to correct the problem or permits its repeated occurrence on subsequent operations, the Engineer shall suspend the affected operations.

The Contractor will not be allowed any additional compensation or extension of time for operations suspended due to unsafe conditions.

The Contractor shall immediately notify the City and document any observed defects or hazardous conditions in the vicinity of the Project site prior to, during, and after Project construction.

7-1.03 PUBLIC CONVENICENCE

Add the following at the end of Section 7-1.03:

Street Closures, Detours, and Barricades

Street closures are usually not allowed on City streets, and may be specifically prohibited as stipulated in the Contract Documents. Otherwise, the Contractor may request full street closure consideration from the Engineer. The Contractor shall submit a request for street closure to the Engineer. The Engineer may route the request through the various City departments for approval consideration. Once there is approval from all necessary departments, the matter will be brought before the City Council for approval consideration. The estimated time frame for department and City Council consideration is approximately six (6) weeks from the time the request is received. The Contractor shall notify the Police, Fire, and Public Works Departments of, or serving, the City of Moreno Valley at least 48 hours in advance of closing, or partially closing, or of reopening, any street, alley or other public thoroughfare, and shall comply with the requirements of said departments in respect thereto. If the telephone numbers herein below are changed, the Contractor is not relieved of the responsibility of notifying said departments.

The following telephone numbers are listed to assist the Contractors in compliance with these requirements:

Fire Department ..... Emergency 911
Business 951.486.6784

Police Department ..... Emergency 911
Business 951.486.6700

Public Works Department 951.413.3100
Transportation Engineering 951.413.3140
Maintenance & Operations 951.413.3160
Capital Projects 951.413.3130
Land Development 951.413.3120
Moreno Valley Utility 951.413.3500

In any site affected by peak hour traffic flows, no lane closure shall be allowed before 8:30 a.m. or after 4:00 p.m. unless approved in writing by the Engineer.

7-1.04 PUBLIC SAFETY

Add the following at the end of Section 7-1.04:

Federal and State laws have established occupational safety and health standards with which all employers must comply. These laws require an employer to provide a safe place of employment (i.e., one that is reasonably free from danger to life or health).

The California Division of Industrial Safety (Cal/OSHA) issues citations if, during an inspection, it observes an employee exposed to an unsafe or unsanitary condition. Citations may also be issued when employee exposure can be shown to have occurred even though not observed during an inspection. Every citation will identify the violation and the gravity of the violation (serious, general, or regulatory).

In addition to the authority to issue citations, Cal/OSHA has the authority to prohibit entry into an unsafe area and the use of unsafe equipment when an imminent hazard exists. (LC 6325) A violation of this type of order is a misdemeanor.

When an actual exposure cannot be demonstrated but a condition is found to exist that would be a violation if an exposure were to occur, then Cal/OSHA may issue an "Information Memorandum." To allow an employee to be exposed to a condition identified in an Information Memorandum constitutes a willful violation of the Safety Orders.

Should a Contractor receive a citation, shut-down (yellow tag), or an Information Memorandum, the Contractor shall notify the Engineer of such.

7-1.05 INDEMNIFICATION

Delete Section 7-1.05A in its entirety and add the following:

See the Agreement.

7-1.06 INSURANCE

Delete Section 7-1.06 in its entirety and add the following:

See the Agreement.

7-1.07 LEGAL ACTIONS AGAINST THE DEPARTMENT

Delete Section 7-1.07 in its entirety

See Section **5-1.43** herein.

8 PROSECUTION AND PROGRESS

8-1.02 SCHEDULE

Delete Section 8-1.02A in its entirety.

Delete the first two sentences in Section 8-1.02B(1) and substitute the following:

The Contractor shall submit a proposed construction schedule (Gant Chart) for the entire Work to the Engineer for review and approval five (5) Working Days prior to the pre-construction meeting and revised schedules thereafter as required by the Engineer when the Contractor's activities differ or are expected to differ from the latest existing schedule. If, on the date of commencement established in the Notice to Proceed, the Contractor has not submitted a construction schedule the Contractor will not be allowed to start Work and no extension of the Contract Time will be granted. The Contractor shall refer to the PROJECT SPECIFIC SCOPE OF WORK section in the Technical Provisions for any required or preferred sequence of Work.

Delete Section 8-1.02C in its entirety.

Delete Section 8-1.02D in its entirety.

8-1.03 PRECONSTRUCTION CONFERENCE

Delete the first two sentences in Section 8-1.03 and substitute the following:

The Contractor’s Representative and the Contractor’s principal Subcontractors shall attend the City’s pre-construction meeting. Other agencies and utilities involved in this Project may also have separate pre-construction meetings; the Contractor and applicable Subcontractors are required to attend the agency/utility meetings.

8-1.04 START OF JOB SITE ACTIVITIES

Delete Section 8-1.04 in its entirety and insert the following.

See the Agreement.

8-1.05 TIME

Delete the first sentence in Section 8-1.05 and substitute the following:

Contract Time starts as indicated in the Agreement.

Add the following at the end of Section 8-1.05:

A written protest shall be filed within 15 Calendar Days after Contractor’s receipt of the Weekly Statement of Working Days, setting forth the facts of the protest; otherwise, the Weekly statement will be deemed to have been accepted by Contractor.

The term “Working Day” shall mean any Calendar Day except Saturdays, Sundays and legal Holidays observed at the locale of the Project. The City’s Furlough Days are every Friday and City Hall will be closed every Friday for business; however, Friday is a Working Day.

The following days have been designated as Holidays by the City of Moreno Valley:

New Year's Day	January 1
Martin Luther King, Jr. Day	3rd Monday in January
President's Day	3rd Monday in February
Memorial Day	Last Monday in May
Independence Day	July 4
Labor Day	1st Monday in September
Veterans' Day	November 11
Thanksgiving	4th Thursday in November
Day after Thanksgiving	4th Friday in November
Christmas Eve	December 24
Christmas Day	December 25

If a Holiday falls upon a Sunday, the following Monday shall be the day the Holiday is observed, and if a Holiday falls upon a Saturday, the preceding Friday shall be the day the Holiday is observed.

The Contract Time for completion of the Work, including corrective items of Work, shall be in accordance with the Agreement. Contract Time extensions, when granted by the Engineer, will be in Working Days, will be in accordance with the Contract Documents, and will be set forth in writing via Change Order.

Work shall not be allowed outside of regular working hours (weekdays, 7:00 a.m. to 3:30 p.m., unless otherwise specified) without the advance approval of the Engineer, except Work items relating to maintenance and cleanup of the Work area for the purpose of public safety and convenience. The Contractor shall request such approval from the Engineer at least 48 hours (two Working Days) in advance of the proposed Work. The Contractor shall not fuel, grease, or otherwise service equipment or trucks from 7:00 p.m. to 6:00 a.m., Monday through Friday, and at no time on Sunday or Holidays. Service work on equipment will be allowed on Saturday from 8:00 a.m. to 4:00 p.m.

Should Work outside of the above hours be approved, inspection, testing and construction engineering costs as a result of the Work outside of regular working hours shall be paid by the Contractor at the hourly rate, including fringe benefits, at straight time or time and one-half rates as applicable, or if a consultant inspection service is retained by the City, then the Contractor will reimburse the City for the actual cost. Under no circumstances will Work outside regular hours be allowed without full-time inspection.

8-1.06 SUSPENSIONS

Add the following at the end of Section 8-1.06:

During construction, if subsurface archaeological resources are encountered, they shall be left in place and a qualified archaeologist shall be called in to examine the findings in accordance with Section 14-2 of the Standard Specifications. Work shall not resume, where discovery was made, until the archaeologist has reviewed the findings, made recommendations for their removal or preservation, and has a reasonable opportunity to carry out the necessary mitigation procedures. The Contract Time will be extended due to the discovery of subsurface

archaeological resources only if the Contractor shows that there is no possible way to proceed with other Work items during the time Work was ceased pursuant to this Section.

8-1.07 DELAYS

8-1.07A General

Add the following at the end of Section 8-1.07A:

Work will not be allowed on days predicted by the South Coast Air Quality Management District (SAQMD) to be "Stage III" smog episode days. Notification will be given to the Contractor's Representative by the Engineer no later than 3:00 p.m. on the day preceding the predicted "Stage III" episode day. The Contractor will be entitled to an extension of Contract Time for such delays, but the Contractor will not be entitled to damages or additional payment due to such delays.

Work required to maintain the Project site in a safe condition (including but not limited to maintenance of traffic control), shall be allowed on **all** days.

8-1.07B Time Adjustments

Add the following at the end of Section 8-1.07B:

The Contract Time and dates of commencement and completion of Work, including corrective items of Work, shall be in accordance with Section 5 of the Agreement. Extensions of time, when granted, will be in Working Days and will otherwise be in accordance with the Standard Specifications, as modified by the Special Provisions, and in writing by Contract Change Order or Construction Change Directive.

8-1.07C Payment Adjustments

Delete Section 8-1.07C in its entirety and substitute the following:

Non-Compensable Delay. The Parties acknowledge that the following types of events are not within the responsibility or control of City or are reasonably contemplated by the Parties to occur during the course of performance of the Work, which may impact the schedule for performance of the Work and may entitle Contractor to an extension of the Contract Time: (1) pulling of cables, energizing of the underground electrical system, and removal of overhead power lines and power poles by Southern California Edison, or any other contractor, on or adjacent to the Project site; and (2) “Force Majeure” events as defined herein (“Non-Compensable Delays”). “**Force Majeure**” means any of the following events, which materially and adversely affect Contractor’s obligations hereunder: earthquakes, acts of God, epidemic, blockade, embargoes, rebellion, war, terrorism, national emergency, riot, act of sabotage, civil commotion, industry-wide labor strike which has material adverse impact on the Work, discovery of any archaeological, paleontological, or cultural resources, spill of hazardous substances by a third party at or near the Project site which is required to be reported to the California Environmental Protection Agency, Department of Toxic Substances Control, discovery at, near, or on the Project site of any species listed as “threatened” or “endangered” under the Federal or State Endangered Species Act, or unusually severe weather conditions.

An extension of the Contract Time shall be the Contractor's sole remedy of Contractor for Non-Compensable Delays. In no event shall Contractor be entitled to any compensation or recovery of any damages in connection with the Non-Compensable Delays defined above.

Excusable Compensable Delay. "Excusable Compensable Delay" means any delay to the Critical Path of the Work occurring after commencement and prior to completion of the Work: (1) which directly impacts the Contract Time established in the Agreement; (2) for which the City is responsible, is unreasonable under the circumstances involved and not within the contemplation of the Parties; and (3) is not due, in whole or in part, to the breach, negligence, or fault of Contractor, or its Subcontractors or suppliers. Contractor's remedy for Excusable Compensable Delay shall be an extension of the Contract Time and reimbursement of actual costs directly resulting from such delays and markup established according to Section 9-1.04 herein.

Concurrent Delay. "Concurrent Delay" means a circumstance when the Contractor is entitled to an extension of time due to a Non-Compensable Delay or an Excusable Compensable Delay, but the performance of the Work is independently suspended, delays or interrupted by an unexcused delay caused by the Contractor including, without limitations, the following: (1) delay caused by an act or omission of the Contractor or a Subcontractor (2) delay for which the Contractor has failed to provide a timely and complete notice of delay or request for time extension; or (3) delay associated with any circumstances where the costs or risk associated with such circumstances are designated in the Contract Documents as being at Contractor's risk or Contractor's own expense. In the case of a Concurrent Delay, Contractor shall be entitled to an extension of the Contract Time and Contractor shall not be entitled to any additional compensation whatsoever during the period of Concurrent Delay.

8-1.10 LIQUIDATED DAMAGES

Delete Section 8-1.10 in its entirety and insert the following.

See the Agreement.

8-1.13 CONTRACTOR'S CONTROL TERMINATION

Delete Section 8-1.13 in its entirety and substitute the following:

8-1.13 TERMINATION FOR CAUSE AND CONVENIENCE

8-1.13A Termination for Cause.

8-1.13A(1) Grounds. The City shall have the right to terminate the Contractor's performance of the Work, in whole or in part, if:

(1) Contractor fails to promptly commence the Work or unnecessarily or unreasonably delays the Work or improperly discontinues the prosecution of the Work or abandons the Work;
(2) Contractor refuses or fails to supply skilled supervisory personnel, an adequate number of properly skilled workers, proper materials, or necessary equipment to perform the Work in strict accordance with the Contract Documents, and the latest approved construction schedule;

(3) Contractor fails to make prompt payment of amounts properly due Subcontractors after receiving payment from the City;
(4) Contractor disregards Applicable Law, statutes, ordinances, codes, rules, regulations, or lawful orders of a public authority;
(5) Contractor fails to resume performance of Work which has been suspended or stopped, within a reasonable time after receipt of notice from the City to do so or (if applicable) after cessation of the event preventing performance;
(6) Any representation or warranty made by Contractor in the Contract Documents or any certificate, schedule, instrument, or other document delivered by Contractor pursuant to the Contract Documents shall have been false or materially misleading when made;
(7) After commencement of the Work, the City becomes aware that the Contractor is using an ineligible contractor, Subcontractor or supplier who was barred from performing Work or providing materials or services on City projects at the time of Bid;
(8) Contractor fails to make payment to Subcontractors for materials or labor in accordance with the respective Contract Documents and Applicable Law;
(9) The Contract is assigned or the Work is sublet otherwise than as specified in the Contract Documents;
(10) Contractor otherwise is guilty of breach of a provision of the Contract Documents; or
(11) Contractor materially fails to execute the Work in accordance with the Contract Documents or, in the City's opinion, is violating any of the terms of the Contract or is not executing the Contract in good faith or is not following instructions of the City as to additional force necessary in the opinion of the City for completion of the Work within the required time.

When the City terminates the Contractor's performance of the Work for one of the reasons stated in this Section 8-1.13A.1, the Contractor shall not be entitled to receive further payment until the Work is finished by others in accordance with Section 8-1.13A.2 of the Special Provisions.

8-1.13A(2) City's Rights Upon Termination of Contract. When any of the reasons specified in the preceding Section exist, the City may, in addition to and without prejudice to any other rights or remedies of the City, notify the Contractor not to resume or to discontinue all Work, or any part thereof, by written notice of default. The City shall advise the Performance Bond surety of the notice of default and that they will be given **fifteen (15) Calendar Days** to arrange for completion of the Work in accordance with the Contract Documents by another contractor or contractors satisfactory to the City. Should the surety fail to effect satisfactory arrangements within said 15-day period, the City shall have the right to issue a notice of termination and to:

(1) Exclude the Contractor from the Project site;
(2) Take possession of the Project site and of all materials, equipment, tools and construction equipment, and machinery thereon owned by the Contractor;
(3) Suspend any further payments to Contractor;
(4) Accept assignment of Subcontracts pursuant; and
(5) Finish the Work by whatever reasonable method the City may deem expedient.

8-1.13A(3) Cost of Completion of Work. The City shall charge the cost to complete the Work, including, but not limited to, protection, investigation, labor, services, equipment, materials, permits, fees, supervisory and administrative costs to Contractor and its Performance Bond surety. If the unpaid balance of the Contract Price exceeds costs of finishing the Work,

including expenses and damages incurred by the Owner and not expressly waived, such excess shall be paid to the Contractor. If City's cost to complete the Work and damages incurred by City due to Contractor's default exceed the unpaid Contract Price, the Contractor and its Performance Bond surety shall pay the difference to the City.

8-1.13A(4) Erroneous Termination. If it has been adjudicated or otherwise determined that the City has erroneously or negligently terminated the Contractor for cause, then said termination shall automatically convert to a termination by the City for convenience as set forth in **Section 8-1.13B** below.

8-1.13A(5) Acceptance of Incomplete or Non-Conforming Work. In lieu of the provisions of this Section for terminating the Contractor's performance, Owner may pay the Contractor for the portion of Work completed according to the provisions of the Contract Documents and may treat the incomplete Work as if they had never been included or contemplated by this Contract, in which case the Contract Price will be reduced by the value of the deleted Work determined in accordance with **Section 9-1.04** of the Standard Specifications. No Claim under this provision will be allowed the Contractor for overhead or prospective profits on Work not completed by the Contractor.

8-1.13B Termination for Convenience

8-1.13B(1) Grounds. The City may, at any time, terminate the Contractor's performance of the Work, in whole or in part, for the City's convenience without regard to Contractor's fault or breach, and without prejudice to any other right or remedy of City, upon fourteen (14) Calendar Days' written notice to Contractor.

8-1.13B(2) Immediate Contractor Action. Upon receipt of written notice from the City of such termination for the City's convenience, the Contractor shall, unless the notice directs otherwise, do the following:

(1) Cease performance of the Work to the extent specified in the notice;
(2) Cooperate with the City to secure the site and demobilize in a safe and orderly fashion;
(3) Take actions necessary, or that the City may direct, for the protection and preservation of the Work;
(4) Except for Work directed to be performed in the notice, incur no further costs and enter into no further subcontracts and purchase orders;
(5) If requested by the City, assign to the City, in the manner and to the extent directed, all of the right, title and interest to the Contractor under the subcontracts, and the City shall have no
(6) liability for acts, omissions, or causes of action resulting therefrom which accrued prior to the date of termination and assignment, which liability shall remain with the Contractor; and
(7) Turn over to the City, as soon as possible, but not later than thirty (30) Calendar Days after receipt of such termination notice, the originals of all of the Contractor's records, files, documents, drawings, and any other items relating to the Project, whether located on the Project site, at the Contractor's office, or elsewhere.

8-1.13B(3) Waiver of Claims. In the event that the City terminates Contractor's performance of the Work for convenience, Contractor agrees to waive any claims for damages, including, but not limited to, home office overhead, loss of anticipated profits on account thereof,

and, as the sole right and remedy of Contractor, the City shall pay Contractor in accordance with Subsection 8-1.13B.4 below. The provisions of the Agreement, which by their nature survive Final Acceptance of the Work, shall remain in full force and effect after such termination to the extent provided in such provisions.

8-1.13B(4) Compensation. Upon termination for convenience, Contractor shall be entitled to be paid the full cost of all Work properly done by Contractor prior to the date of termination not previously paid for, less sums already received by Contractor on account of the portion of the Work satisfactorily performed, but in no event shall the amounts paid hereunder exceed the portion of Work completed in accordance with the Contract Documents. In no event shall Contractor be entitled to recover any costs, overhead, or profit for Work not performed prior to the termination notice(s).

9 PAYMENT

9-1.04 FORCE ACCOUNT

9-1.04(3) MATERIALS

Add the following after the first sentence of Section 9-1.04C:

Unless included in the Bid Schedule, or unless otherwise called for in the Special Provisions, no payment will be made for materials or equipment delivered but not incorporated in the Work.

9-1.16 PROGRESS PAYMENTS

Add the following at the end of item 3 in Section 9-1.16A:

…if included in the Bid Schedule or otherwise called for in the Special Provisions as eligible and is in compliance with other Contract parts.

Add the following at the end of Section 9-1.16A:

This Contract is subject to the following provisions of California Public Contract Code Section 20104.50 which provides as follows:

a. (1) It is the intent of the Legislature in enacting this Section to require all local governments to pay their contractors on time so that these contractors can meet their own obligations. In requiring prompt payment by all local governments, the Legislature hereby finds and declares that the prompt payment of outstanding receipts is not merely a municipal affair, but is, instead, a matter of statewide concern.

(2) It is the intent of the Legislature in enacting this article to fully occupy the field of public policy relating to the prompt payment of local governments' outstanding receipts. The Legislature finds and declares that all governmental officials, including those in local government, must set a standard of prompt payment that any business in the private sector that may contract for services should look toward for guidance.

b. Any local agency which fails to make any progress payment within thirty (30) days after receipt of an undisputed and properly submitted payment request from a Contractor or construction Contract shall pay interest to the Contractor equivalent to the legal rate set forth in subdivision (a) of § 685.010 of the Code of Civil Procedure.

c. Upon receipt of a payment request, each local agency shall act in accordance with both of the following:

(1) Each payment request shall be reviewed by the local agency as soon as practicable after receipt of the purpose of determining that the payment request is a proper payment request;

(2) Any payment request determined not to be a proper payment request suitable for payment shall be returned to the Contractor as soon as practicable, but not later than seven

(7) days, after receipt. A request returned pursuant to this Section shall be accompanied by a document setting forth in writing the reasons why the payment request is not proper.

The number of days available to a local agency to make a payment without incurring interest pursuant to this Section shall be reduced by the number of days by which a local agency exceeds the seven-day return requirement set forth in paragraph (2) of subdivision (c), above.

For purposes of this Article:

(1) A "local agency" includes, but is not limited to, a city, including a charter city, a county, and a city and county, and is any public entity subject to this part.

(2) A "progress payment" includes all payments due Contractors, except that portion of the final payment designated by the Contract as retention earnings.

(3) A payment request shall be considered properly executed if funds are available for payment of the payment request, and the Financial Officer of the local agency does not delay the payment due to an audit inquiry.

Each local agency shall require that this article, or a summary thereof, be set forth in the terms of any Contract subject to this article.

Delete item 1 in Section 9-1.16C and insert the following:

Listed in the Bid Schedule or otherwise called for in the Special Provisions as eligible and is in compliance with other Contract parts.

9-1.16 STOP NOTICE WITHHOLDS

Delete Section 9-1.16E(4) in its entirety and substitute the following:

In the event that a stop payment notice is filed with the City, an amount equal to 125% of the total of the amount claimed in the stop payment notice will be withheld by the City until the stop notice has been released. Alternatively, the Contractor may file with the City a bond, on a form approved by the City, executed by one or more corporate California admitted surety insurers, in an amount equal to one hundred and twenty-five percent (125%) of the claim stated in the stop payment notice conditioned for the payment of any amount the claimant recovers in an action on the claim, together with court costs if the claimant prevails. Upon the City's acceptance of such bond, the City shall not withhold funds from the Contractor pursuant to the stop payment notice. The surety(ies) upon the stop notice release bond shall be different than, and jointly and severally liable to the stop payment notice claimant with, the Payment Bond surety(ies).

9-1.16E PROMPT PROGRESS PAYMENT TO SUBCONTRACTORS

Add the following as new Section 9-1.16E(6):

The Contractor's attention is directed to Business and Professions Code Sections 7108.5 and 7108.6 concerning prompt payment to Subcontractors and transportation charges submitted by dump truck drivers. The Contractor shall pay all Subcontractors for and on account of Work performed by such Subcontractors within seven (7) Calendar Days after receipt of progress payment from the City and within seven (7) Calendar Days after receipt of retention from the City.

The Contractor shall pay all transportation charges submitted by a duly authorized motor carrier of property in dump truck equipment by the 20th day following the last day of the calendar month in which the transportation was performed, if the charges, including all necessary documentation, are submitted by the fifth day following the last day of the calendar month in which the transportation was performed.

If there is a good faith dispute over all or any portion of the amount due on a progress payment from the Contractor to a Subcontractor or dump truck driver, the Contractor may withhold no more than one hundred and fifty percent (150%) of the disputed amount.

9-1.16F RETENTIONS

Delete Section 9-1.16F in its entirety and substitute the following.

9-1.15F Retentions

From each progress payment, **five percent (5%)** will be deducted and retained by the City until final payment is made; the remainder, less the amounts withheld in accordance with Section 9-1.07E, will be paid to the Contractor. At the expiration of sixty (60) days from the date of Final Acceptance, or as prescribed by law, the five percent (5%) deducted and retained from each progress estimate by the City will be paid to the Contractor except such amounts as are required by law to be withheld by properly executed and filed notices to stop payment, or as may be authorized by the Contract to be further retained. For contracts of less than $100,000, retention shall be paid to the Contractor at the expiration of sixty (60) days from the date the Work is accepted as complete by the City Engineer.

This Contract is subject to the following provisions of Public Contract Code Section 7200, which provides as follows:

1. This section shall apply with respect to all Contracts entered into on or after January 1, 1999, between a public entity and an original Contractor, between an original Contractor and a Subcontractor, and between all Subcontractors thereunder, relating to the construction of any public Work of improvement.

2. For purposes of this Section, “public entity” means the state, including every state agency, office, department, division, bureau, board, or commission, a city, county, city and county, including chartered cities and chartered counties, district, special district, public authority, political subdivision, public corporation, or nonprofit transit corporation wholly owned by a public agency and formed to carry out the purposes of the public agency.

3. In a Contract between the original Contractor and a Subcontractor, and in a Contract between a Subcontractor and any Subcontractor thereunder, the percentage of the retention proceeds withheld may not exceed the percentage specified in the Contract between the public entity and the original Contractor.

4. When a performance and payment bond is required in the solicitation for bids, item (3) above shall not apply to either of the following:

A. The original Contractor, if the Subcontractor fails or refuses to provide a performance and payment bond issued by an admitted surety insurer, to the original Contractor.

B. The Subcontractor, if a Subcontractor thereunder fails or refuses to provide a performance and payment bond issued by an admitted surety insurer, to the Subcontractor.

5. No party identified in item (3) above shall require any other party to waive any provision of this Section.

6. In the event that the Contractor elects to substitute securities in lieu of retentions, the Contractor may withhold from its Subcontractors, who have not elected to substitute securities in lieu of retentions, the amount of retentions that would have otherwise been withheld.

9-1.17B PAYMENT BEFORE FINAL ESTIMATE

Delete Section 9-1.17B in its entirety.

9-1.17C PROPOSED FINAL ESTIMATE

Delete Section 9-1.17C in its entirety and substitute the following:

When all Work required by the Contract Documents has been fully completed in compliance with the Contract Documents and all Applicable Laws including, but not limited to, correction or completion of all punch list items, the Contractor shall submit to the Engineer a written final estimate of the total amount payable to the Contractor, including an itemization of the total amount, segregated as to Contract item quantities, Contract Change Orders, extra work, and other bases for payment adjustments and deductions. The estimate shall show all deductions made or to be made for prior payments and amounts to be withheld pursuant to Section.

9-1.17D FINAL PAYMENT AND CLAIMS

Delete Section 9-1.17D in its entirety and substitute the following:

Upon agreement to the final estimate by the Engineer, Contractor shall prepare and submit a final invoice to the Engineer based upon the agreed-upon final estimate. The City shall pay the final invoice within 30 days after receipt. Contract Change Orders will be issued for all extra work and other bases of payment or deductions. A “Balancing Change Order” will used for quantity overages or underages.

If the Contractor submits a claim because the Engineer and Contractor cannot agree to the final estimate, the Engineer shall prepare a semifinal estimate of the non-disputed items, furnish the semifinal estimate to the Contractor, and the City shall pay the amount indicated in the semifinal estimate to the Contractor within 30 days of furnishing the semi-final estimate to the Contractor. The semifinal estimate is conclusive as to the amount of Work completed and the amount payable, subject to Sections 5-1.27 “Records,” 5-1.47 “Guarantee,” and 9-1.21 “Clerical Errors.”

SPECIAL PROVISIONS

TECHNICAL PROVISIONS

Project Specific Scope of Work

Description of Work

This project consists of the following work: (1) reconstruction and realignment of two westbound ramps; (2) addition of a westbound direct on-ramp; (3) construction of a new westbound auxiliary lane; (4) installation of a signal at the intersection of the new westbound off-ramp and Moreno Beach Drive; (5) addition of ramp metering on the westbound on-ramps; (6) demolition of the existing SR-60/Moreno Beach Drive overcrossing structure; (7) construction of a new SR-60/Moreno Beach Drive overcrossing structure including raising the roadway profile and adjusting the eastbound ramps and Moreno Beach Drive to grade; (8) replacing the signal at the intersection of the eastbound ramp and Moreno Beach Drive; (9) utility relocations and installations in the new bridge; (10) provision for highway planting, irrigation, hardscape, and erosion control for the entire interchange; (11) accommodation of off-site drainage called Ironwood Avenue Storm Drain Line K-1 (along Ironwood Avenue 1/2 mile north of the interchange); (12) addition of bike lanes and sidewalks on Moreno Beach Drive; and (13) related work. New features include City standard street lights on Moreno Beach Drive and decorative bridge lights. Utility coordination with Moreno Valley Utility (MVU), Frontier Communications (Frontier), Southern California Edison (SCE), and Eastern Municipal Water District (EMWD) is required.

Base Bid No. 1 consists of the roadway and structures work within the Caltrans and City rights-of-way at the SR-60/Moreno Beach Drive interchange. Additive Alternate Bid No. 1 consists of the planting and irrigation work at the interchange. Base Bid No. 2 consists of the storm drain Line K-1 work located along Ironwood Avenue. Base Bid No. 3 consists of the EMWD water line relocation on Ironwood Avenue at the downstream end of Line K-1. Base Bid No. 4 consists of Moreno Valley Utility work at the SR-60/Moreno Beach interchange including a new facility in the bridge and new services to the signals and lighting. Additive Alternate Bid No. 2 is a Rock Mulch/Erosion Control alternative that provides for installation of erosion control in place of the planting and irrigation shown on the Additive Alternate Bid No. 1 plan. Base Bid Nos. 1 through 4 and Additive Alternate Bid No. 1 are shown on the plans. Additive Alternate Bid No. 2 is shown in the Bid Documents - Appendix A.

Work associated with storm drain Line K-1 has Federal Emergency Management Agency (FEMA) funding and requires separate documentation as noted in the bid documents. The environmental permits have distinct expiration dates. Easements from property owners along Ironwood have advance notification requirements as noted in the bid documents and plans.

State Route 60
Moreno Beach Drive Interchange Project

(Phase 2)

RIVERSIDE COUNTY, CALIFORNIA
District 08 - RIV – 60 - PM 18.8 TO PM 19.6
Project EFIS: 0812000059
Project EA: 323031

SPECIAL PROVISIONS FOR CONSTRUCTION ON STATE HIGHWAY

FINAL SPECIAL PROVISIONS

Approved December 2020

Caltrans

MORENO VALLEY

THE SPECIAL PROVISIONS CONTAINED HEREIN HAVE BEEN PREPARED BY OR UNDER THE DIRECTION OF THE FOLLOWING REGISTERED PERSONS.

Caltrans Standard Specifications dated 2018

Caltrans Standard Plans dated 2018

ROADWAY

Daniel Kachi

_____

REGISTERED CIVIL ENGINEER

REGISTERED PROFESSIONAL ENGINEER
Daniel Kachi
No. C 85739
Exp. 9/30/22
CIVIL
STATE OF CALIFORNIA

DRAINAGE

_____

REGISTERED CIVIL ENGINEER

REGISTERED PROFESSIONAL ENGINEER
Paul Kosinski
No. C 73254
Exp. 12/31/22
CIVIL
STATE OF CALIFORNIA

STRUCTURES

_____

REGISTERED CIVIL ENGINEER

REGISTERED PROFESSIONAL ENGINEER
Kevin Michalski
No. C 67282
Exp. 9/30/22
CIVIL
STATE OF CALIFORNIA

LANDSCAPE

ERIC FREEMAN #6245, EXP. 12/31/2022

LICENSED LANDSCAPE ARCHITECT

STANDARD PLANS LIST

The standard plan sheets applicable to this Contract include those listed below. The applicable revised standard plans (RSPs) listed below are included in the project plans.

	ABBREVIATIONS, LINES, SYMBOLS, AND LEGEND
A3A	**Abbreviations (Sheet 1 of 3)**
A3B	**Abbreviations (Sheet 2 of 3)**
A3C	**Abbreviations (Sheet 3 of 3)**
A10A	**Legend - Lines and Symbols (Sheet 1 of 5)**
A10B	**Legend - Lines and Symbols (Sheet 2 of 5)**
A10C	**Legend - Lines and Symbols (Sheet 3 of 5)**
A10D	**Legend - Lines and Symbols (Sheet 4 of 5)**
A10E	**Legend - Lines and Symbols (Sheet 5 of 5)**
A10F	**Legend - Soil (Sheet 1 of 2)**
A10G	**Legend - Soil (Sheet 2 of 2)**
	PAVEMENT MARKERS, TRAFFIC LINES, AND PAVEMENT MARKINGS
A20A	**Pavement Markers and Traffic Lines - Typical Details**
RSP A20B	**Pavement Markers and Traffic Lines - Typical Details**
RSP A20C	**Pavement Markers and Traffic Lines - Typical Details**
RSP A20D	**Pavement Markers and Traffic Lines - Typical Details**
RSP A20E	**Pavement Markers and Traffic Lines - Typical Detail for Contrast Striping**
RSP A20F	**Pavement Markers and Traffic Lines - Typical Details**
A24A	**Pavement Markings - Arrows**
A24B	**Pavement Markings - Arrows and Symbols**
A24C	**Pavement Markings - Symbols and Numerals**
A24D	**Pavement Markings - Words**
RSP A24E	**Pavement Markings - Words**
A24F	**Pavement Markings - Crosswalks**
RSP A24G	**Pavement Markings - Yield Lines, Limit Lines, and Wrong Way Details**
	EXCAVATION AND BACKFILL
A62A	**Excavation and Backfill - Miscellaneous Details**
A62B	**Limits of Payment for Excavation and Backfill - Bridge Surcharge and Wall**
A62C	**Limits of Payment for Excavation and Backfill - Bridge**
A62D	**Excavation and Backfill - Concrete Pipe Culverts**
A62DA	**Excavation and Backfill - Concrete Pipe Culverts - Indirect Design Method**
A62E	**Excavation and Backfill - Cast-In-Place Reinforced Concrete Box and Arch Culverts**
A62F	**Excavation and Backfill - Metal and Plastic Culverts**
RSP A62G	**Excavation and Backfill - Precast Reinforced Concrete Box Culvert**
	PORTABLE CONCRETE BARRIER
A63A	**Portable Concrete Barrier (Type 60K)**
A63B	**Portable Concrete Barrier (Type 60K)**
	OBJECT MARKERS, DELINEATORS, CHANNELIZERS, AND BARRICADES
A73A	**Object Markers**
RSP A73B	**Markers**
A73C	**Delineators, Channelizers and Barricades**
	SURVEY MONUMENTS
A74	**Survey Monuments**

	MIDWEST GUARDRAIL SYSTEM - STANDARD RAILING SECTIONS
RSP A77L1	Midwest Guardrail System - Standard Railing Section (Wood Post with Wood Block)
RSP A77L2	Midwest Guardrail System - Standard Railing Section (Steel Post with Notched Wood or Notched Recycled Plastic Block)
RSP A77M1	Midwest Guardrail System - Standard Hardware
RSP A77N1	Midwest Guardrail System - Wood Post and Wood Block Details
A77N2	Midwest Guardrail System - Steel Post and Notched Wood Block Details
RSP A77N3	Midwest Guardrail System - Typical Line Post Embedment and Hinge Point Offset Details
RSP A77N4	Midwest Guardrail System - Typical Railing Delineation and Dike Positioning Details
	MINOR CONCRETE VEGETATION CONTROL - GUARDRAIL SYSTEM
A77N5	Minor Concrete Vegetation Control - Guardrail System
A77N5A	Minor Concrete Vegetation Control - Guardrail System - Narrow Vegetation Control Installation
A77N6	Minor Concrete Vegetation Control - Guardrail System - For Terminal System End Treatments
A77N7	Minor Concrete Vegetation Control - Guardrail System - At Structure Approach
A77N8	Minor Concrete Vegetation Control - Guardrail System - At Fixed Object
A77N9	Minor Concrete Vegetation Control - Guardrail System - At Fixed Object
A77N10	Minor Concrete Vegetation Control - Guardrail System - At Fixed Object
A77N11	Minor Concrete Vegetation Control - Guardrail System - Miscellaneous Details
	MIDWEST GUARDRAIL SYSTEM - TYPICAL LAYOUTS FOR EMBANKMENTS
RSP A77P1	Midwest Guardrail System - Typical Layouts for Embankments
RSP A77P2	Midwest Guardrail System - Typical Layouts for Embankments
	MIDWEST GUARDRAIL SYSTEM - TYPICAL LAYOUTS FOR FIXED OBJECTS
RSP A77R3	Midwest Guardrail System - Typical Layouts for Roadside Fixed Objects
RSP A77R4	Midwest Guardrail System - Typical Layouts for Roadside Fixed Objects
	MIDWEST GUARDRAIL SYSTEM - END ANCHORAGE AND RAIL TENSIONING ASSEMBLY
A77S1	Midwest Guardrail System - End Anchor Assembly (Type SFT)
A77S2	Midwest Guardrail System - Rail Tensioning Assembly
A77S3	Metal Railing Anchor Cable and Anchor Plate Details
	MIDWEST GUARDRAIL SYSTEM - CONNECTION DETAILS AND TRANSITION RAILING TO BRIDGE RAILINGS, ABUTMENTS AND WALLS
RSP A77U4	Midwest Guardrail System - Transition Railing (Type WB-31)
	FENCES
RSP A85	Chain Link Fence
A85A	Chain Link Fence Details
A85B	Chain Link Fence Details
	CURBS, DRIVEWAYS, DIKES, CURB RAMPS, AND ACCESSIBLE PARKING
A87A	Curbs and Driveways
A87B	Hot Mix Asphalt Dikes
A88A	Curb Ramp Details
A88B	Curb Ramp and Island Passageway Details
	PAVEMENTS
P1	Jointed Plain Concrete Pavement - New Construction
P10	Concrete Pavement Dowel Bar Details
P12	Concrete Pavement Dowel Bar Basket Details

RSP P15	Concrete Pavement - Tie Bar Details
P17	Concrete Pavement - Tie Bar Basket Details
P18	Concrete Pavement - Lane Schematics and Isolation Joint Detail
P20	Joint Seals
P30	Concrete Pavement - End Panel Pavement Transitions
P74	Pavement Edge Treatments
P75	Pavement Edge Treatments - Overlays
P76	Pavement Edge Treatments - New Construction
	DRAINAGE INLETS, PIPE INLETS AND GRATES
D71	Drainage Inlet Markers
D72B	CIP Drainage Inlets - Types G1, G2, G3, G4, G5 and G6
D72C	CIP Drainage Inlets - Types G1, G2, G3, G4, G5 and G6
D72F	CIP Drainage Inlet Notes
D72G	CIP Drainage Inlet Tables
D74	Drainage Inlet Details
D75B	Concrete Pipe Inlets
D75C	Pipe Inlets - Ladder and Trash Rack Details
D77A	Grate Details No. 1
D77B	Grate Details No. 2
D77C	Alternative Hinged Cover for Type OL and OS Inlets and Trash Rack for Type OCP Inlet
	GUTTER AND INLET DEPRESSIONS
D78A	Gutter Depressions
D78C	Inlet Depressions - Hot Mix Asphalt Shoulders
	BOX CULVERTS
D81	Cast-In-Place Reinforced Concrete Double Box Culvert
RSP D82	Cast-In-Place Reinforced Concrete Box Culvert - Miscellaneous Details
RSP D84	Box Culvert Wingwalls - Types A, B and C
D85	Box Culvert Wingwalls - Types D and E
D86A	Box Culvert Warped Wingwalls
	PIPE AND ARCH CULVERT - ENDWALLS AND WARPED WINGWALLS
D86B	Pipe Culvert Headwalls, Endwalls and Warped Wingwalls
	CONSTRUCTION LOADS ON CULVERTS AND STRUT DETAILS
D88	Construction Loads on Culverts
	PIPE CULVERT HEADWALLS, ENDWALLS, WINGWALLS, AND JUNCTION STRUCTURE
RSP D89A	Pipe Culvert Headwalls - Straight and "L"
RSP D89B	Pipe Culvert Headwalls - Straight and "L"
D90	Pipe Culvert Headwalls, Endwalls and Wingwalls - Types A, B and C
	PIPE RISER AND DRAINAGE INLET RISER CONNECTIONS
D93A	Pipe Riser Connections
D93B	Drainage Inlet Riser Connections
D93C	Pipe Riser with Debris Rack Cage
	FLARED END SECTIONS
D94A	Metal and Plastic Flared End Sections
D94B	Concrete Flared End Sections
	PIPE COUPLING AND JOINT DETAILS
D97H	Reinforced Concrete Pipe or Non-Reinforced Concrete Pipe - Standard and Positive Joints

	GABIONS AND UNDERDRAINS
D102	Underdrains
	LANDSCAPE AND EROSION CONTROL
H1	Landscape and Erosion Control Symbols
H2	Landscape Details
H3	Landscape Details
RSP H4	Landscape Details (Sprinkler Assembly)
H5	Landscape Details (Swing Joint and Protector)
RSP H6	Landscape Details
H7	Landscape Details
RSP H8	Landscape Details
RSP H9	Landscape Details
H10	Irrigation Controller Enclosure Cabinet
RSP H51	Erosion Control Details - Fiber Roll and Compost Sock
H52	Rolled Erosion Control Product
	TEMPORARY CRASH CUSHIONS, RAILING AND TRAFFIC SCREEN
T1A	Temporary Crash Cushion, Sand Filled (Unidirectional)
T1B	Temporary Crash Cushion, Sand Filled (Bidirectional)
T2	Temporary Crash Cushion, Sand Filled (Shoulder Installations)
T3A	Temporary Railing (Type K)
T3B	Temporary Railing (Type K)
T4	Temporary Traffic Screen
T5	Temporary Terminal Section (Type K)
	TEMPORARY TRAFFIC CONTROL SYSTEMS
T9	Traffic Control System Tables for Lane and Ramp Closures
T10	Traffic Control System for Lane Closure on Freeways and Expressways
T10A	Traffic Control System for Lane Closure on Freeways and Expressways
T11	Traffic Control System for Lane Closure on Multilane Conventional Highways
RSP T11A	Traffic Control System for Changeable Lane Closure on Multilane Conventional Highways and Expressways
T12	Traffic Control System for Half Road Closure on Multilane Conventional Highways and Expressways
T14	Traffic Control System for Ramp Closure
RSP T15	Traffic Control System for Moving Lane Closure on Multilane Highways
T16	Traffic Control System for Moving Lane Closure on Multilane Highways
T17	Traffic Control System for Moving Lane Closure on Two Lane Highways
RSP T18	Traffic Control System Construction Work Zone Speed Limit Reduction on Freeways and Expressways
RSP T20	Traffic Control System Construction Work Zone Speed Limit Reduction Details
RSP T21	Traffic Control System Construction Work Zone Speed Limit Reduction Twenty-Four Hours a Day 7 Days a Week (24/7)
RSP T26	Temporary Automated End of Queue Warning System Type 1 (Queue <= 3.5 Miles)
	TEMPORARY PEDESTRIAN ACCESS ROUTES
T30	Temporary Pedestrian Access Routes - Typical Sidewalk Closure and Pedestrian Detour
T31	Temporary Pedestrian Access Routes - Typical Sidewalk Diversion Within Roadbed
T32	Temporary Pedestrian Access Routes - Typical Sidewalk/Crosswalk Closure

	and Pedestrian Detour
T33	Temporary Pedestrian Access Routes - Ramp
T34	Temporary Pedestrian Access Routes - Curb Ramp Options
	TEMPORARY WATER POLLUTION CONTROL
T51	Temporary Water Pollution Control Details (Temporary Silt Fence)
T52	Temporary Water Pollution Control Details (Temporary Straw Bale Barrier)
T53	Temporary Water Pollution Control Details (Temporary Cover)
T54	Temporary Water Pollution Control Details (Temporary Erosion Control Blanket)
T55	Temporary Water Pollution Control Details (Temporary Erosion Control Blanket)
T56	Temporary Water Pollution Control Details (Temporary Fiber Roll)
T57	Temporary Water Pollution Control Details (Temporary Check Dam)
T58	Temporary Water Pollution Control Details (Temporary Construction Entrance)
T59	Temporary Water Pollution Control Details (Temporary Concrete Washout Facility)
T60	Temporary Water Pollution Control Details (Temporary Reinforced Silt Fence)
T61	Temporary Water Pollution Control Details (Temporary Drainage Inlet Protection)
T62	Temporary Water Pollution Control Details (Temporary Drainage Inlet Protection)
T63	Temporary Water Pollution Control Details (Temporary Drainage Inlet Protection)
T64	Temporary Water Pollution Control Details (Temporary Drainage Inlet Protection)
T65	Temporary Water Pollution Control Details (Temporary High-Visibility Fence)
T66	Temporary Water Pollution Control Details (Temporary Large Sediment Barrier)
	BRIDGE DETAILS
RSP B0-1	Bridge Details
B0-3	Bridge Details
B0-5	Bridge Details
B0-13	Bridge Details
	PILES
B2-3	16" and 24" Cast-In-Drilled-Hole Concrete Pile
	JOINT SEALS
B6-21	Joint Seals (Maximum Movement Rating = 2")
	BOX GIRDER DETAILS
B7-1	Box Girder Details
	DECK DRAINS
B7-6	Deck Drains - Types D-1 and D-2
RSP B7-8	Deck Drainage Details
	UTILITY OPENING
RSP B7-10	Utility Opening - Box Girder
	CAST-IN-PLACE POST-TENSIONED GIRDER
B8-5	Cast-In-Place Post-Tensioned Girder Details
	STRUCTURE APPROACH
B9-1	Structure Approach - Type N (30)
B9-5	Structure Approach - Slab Details
B9-6	Structure Approach - Drainage Details

	CHAIN LINK RAILING, CABLE RAILING AND TUBULAR HAND RAILING
RSP B11-47	Cable Railing
RSP B11-52	Chain Link Railing Type 7
	BRIDGE CONCRETE BARRIERS
B11-58	Concrete Barrier Type 732SW (Sheet 1 of 2)
B11-59	Concrete Barrier Type 732SW (Sheet 2 of 2)
	ADDITIONAL BRIDGE CONCRETE BARRIERS
RSP B11-81	Concrete Barrier Type 842 Details No. 1
RSP B11-82	Concrete Barrier Type 842 Details No. 2
	WATER SUPPLY LINE (BRIDGE)
B14-4	Water Supply Line (Bridge) (Pipe Sizes Less Than 4")
B14-5	Water Supply Line (Details) (Pipe Sizes Less Than 4")
	ROADSIDE SIGNS
RS1	Roadside Signs - Typical Installation Details No. 1
RS2	Roadside Signs - Wood Post - Typical Installation Details No. 2
RS4	Roadside Signs - Typical Installation Details No. 4
	OVERHEAD SIGNS (TRUSS)
RSP S1	Overhead Signs - Truss, Instructions and Examples
RSP S2	Overhead Signs - Truss, Single Post Type - Post Types II thru IX
S3	Overhead Signs - Truss, Single Post Type - Base Plate and Anchorage Details
S4	Overhead Signs - Truss, Single Post Type - Structural Frame Members Details No. 1
S5	Overhead Signs - Truss, Single Post Type - Structural Frame Members Details No. 2
S6	Overhead Signs - Truss, Gusset Plate Details
S8	Overhead Signs - Truss, Single Post Type - Round Pedestal Pile Foundation
RSP S16	Overhead Signs - Walkway Details No. 1
RSP S17	Overhead Signs - Walkway Details No. 2
S17A	Overhead Signs - Walkway Details No. 3
S18	Overhead Signs - Walkway Safety Railing Details
S19	Overhead Signs - Truss, Sign Mounting Details - Laminated Panel - Type A
	OVERHEAD AND ROADSIDE SIGNS PANELS
S81	Overhead Laminated Sign - Single or Multiple Panel (Type A, 1" Thick)
S82	Roadside Laminated Sign - Single or Multiple Panel (Type B, 1" Thick)
S86	Laminated Panel Details (Extrusions for Type A, B and H Panels)
S87	Type A-1 Mounting Hardware for Overhead Laminated Type A Panel (Truss and Lightweight Sign Structures)
S88	Type A-2 Mounting Hardware for Overhead Laminated Type A Panel (Bridge Mounted and Tubular Sign Structures)
S89	Roadside Sign - Formed Single Sheet Aluminum Panel
S93	Framing Details for Framed Single Sheet Aluminum Signs, Rectangular Shape
S94	Roadside Framed Single Sheet Aluminum Signs, Rectangular Shape
S95	Roadside Single Sheet Aluminum Signs, Diamond Shape
	ELECTRICAL SYSTEMS - LEGEND
RSP ES-1A	Electrical Systems (Legend)
RSP ES-1B	Electrical Systems (Legend)
RSP ES-1C	Electrical Systems (Legend)
	ELECTRICAL SYSTEMS - SERVICE EQUIPMENT AND WIRING DIAGRAMS
RSP ES-2D	Electrical Systems (Service Equipment Enclosure and Typical Wiring Diagram, Type III - A Series)

RSP ES-2F	Electrical Systems (Service Equipment Enclosure and Typical Wiring Diagram, Type III - C Series)
	ELECTRICAL SYSTEMS - CONTROLLER CABINETS
RSP ES-3C	Electrical Systems (Controller Cabinet Foundation and Pad Details)
	ELECTRICAL SYSTEMS - SIGNAL HEADS, SIGNAL FACES AND MOUNTINGS
RSP ES-4A	Electrical Systems (Signal Head Mounting)
RSP ES-4B	Electrical Systems (Pedestrian Signal Heads)
RSP ES-4C	Electrical Systems (Signal Heads and Mountings)
RSP ES-4D	Electrical Systems (Signal Head Mounting)
RSP ES-4E	Electrical Systems (Signal Heads and Optical Detector Mounting)
	ELECTRICAL SYSTEMS - DETECTORS
ES-5A	Electrical Systems (Loop Detectors)
RSP ES-5B	Electrical Systems (Detectors)
ES-5C	Electrical Systems (Accessible Pedestrian Signal and Push Button Assemblies)
RSP ES-5D	Electrical Systems (Curb and Shoulder Termination, Trench, and Handhole Details)
	ELECTRICAL SYSTEMS - LIGHTING STANDARDS
ES-6E	Electrical Systems (Lighting Standard, Types 30 and 31)
RSP ES-6F	Electrical Systems (Lighting Standard, Slip Base Plate)
	ELECTRICAL SYSTEMS - SIGNAL AND LIGHTING STANDARD, TYPE TS, AND PUSH BUTTON ASSEMBLY POST
RSP ES-7A	Electrical Systems (Signal and Lighting Standard, Type TS, and Push Button Assembly Post)
	ELECTRICAL SYSTEMS - SIGNAL AND LIGHTING STANDARDS
RSP ES-7B	Electrical Systems (Signal and Lighting Standard, Type 1 and Equipment Identification Characters)
RSP ES-7F	Electrical Systems (Signal and Lighting Standard, Case 4 Signal Mast Arm Loading, Wind Velocity = 100 mph and Signal Mast Arm Lengths 25' to 45')
RSP ES-7G	Electrical Systems (Signal And Lighting Standard, Case 5 Signal Mast Arm Loading, Wind Velocity = 100 mph and Signal Mast Arm Lengths 50' to 55')
RSP ES-7H	Electrical Systems (Signal and Lighting Standard, Case 5 Signal Mast Arm Loading, Wind Velocity = 100 mph and Signal Mast Arm Lengths 60' to 65')
	ELECTRICAL SYSTEMS - FLASHING BEACONS
RSP ES-7J	Electrical Systems (Flashing Beacon on a Type 1, Type 15-FBS and Type 40 Standard)
	ELECTRICAL SYSTEMS - SIGNAL AND LIGHTING STANDARD DETAILS
RSP ES-7M	Electrical Systems (Signal and Lighting Standard, Detail No. 1)
ES-7N	Electrical Systems (Signal and Lighting Standard, Detail No. 2)
RSP ES-7O	Electrical Systems (Signal and Lighting Standard, Detail No. 3)
	ELECTRICAL SYSTEMS - SIGNAL AND LIGHTING, MISCELLANEOUS ATTACHMENT
ES-7R	Electrical Systems (Signal and Lighting, Miscellaneous Attachment)
	ELECTRICAL SYSTEMS - PULL BOX
RSP ES-8A	Electrical Systems (Non-Traffic Pull Box)
RSP ES-8B	Electrical Systems (Traffic Pull Box)
	ELECTRICAL SYSTEMS - STRUCTURE INSTALLATIONS
RSP ES-9A	Electrical Systems (Structure Pull Box Installations)
ES-9B	Electrical Systems (Conduit Riser and Expansion Fitting, Structure Installations)
RSP ES-9C	Electrical Systems (Structure Pull Box)
RSP ES-9D	Electrical Systems (Structure Pull Box Installations)

ELECTRICAL SYSTEMS - ISOFOOTCANDLE CURVES AND FOUNDATION DETAILS

ES-10A	Electrical Systems (Isofootcandle Curves)
RSP ES-10B	Electrical Systems (Isofootcandle Curves)
ES-11	Electrical Systems (Foundation Installations)

ELECTRICAL SYSTEMS - SPLICE INSULATION METHODS, KINKING AND BANDING DETAILS

ES-13A	Electrical Systems (Splice Insulation Methods Details)
RSP ES-13B	Electrical Systems (Kinking and Banding Detail)

ELECTRICAL SYSTEMS - SIGN ILLUMINATION EQUIPMENT AND CONTROLS

RSP ES-15A	Electrical Systems (Sign Illumination Equipment)
RSP ES-15C	Electrical Systems (Sign Illumination Equipment)
RSP ES-15D	Electrical Systems (Lighting and Sign Illumination Control)

ELECTRICAL SYSTEMS - CAMERA POLE AND VEHICLE DETECTION SYSTEM POLE

RSP ES-16B	Electrical Systems (Camera Pole - 25' to 45' Pole)

TEMPORARY WOOD POLES

ES-18A	Temporary Wood Poles - General Notes
RSP ES-18B	Temporary Wood Poles - Non-Guyed - No Signals on Spans
RSP ES-18C	Temporary Wood Poles - Guyed - No Signals on Spans
RSP ES-18D	Temporary Wood Poles - Guyed - With Signal Faces on Spans
RSP ES-18E	Temporary Wood Poles - Non-Guyed - With Signal Faces on Span
RSP ES-19A	Temporary Wood Poles - Details No. 1
ES-19B	Temporary Wood Poles - Details No. 2
RSP ES-19C	Temporary Wood Poles - Details No. 3
RSP ES-19D	Temporary Wood Poles - Details No. 4
ES-19E	Temporary Wood Poles - Details No. 5

ORGANIZATION

Special provisions are under headings that correspond with the main-section headings of the *Standard Specifications*. A main-section heading is a heading shown in the table of contents of the *Standard Specifications*.

Each special provision begins with a revision clause that describes or introduces a revision to the *Standard Specifications* as revised by any revised standard specification.

Any paragraph added or deleted by a revision clause does not change the paragraph numbering of the *Standard Specifications* for any other reference to a paragraph of the *Standard Specifications*.

^^

DIVISION I GENERAL PROVISIONS

1 GENERAL

Add to section 1-1.01:

Bid Items and Applicable Sections

Item code	Item description	Applicable section
129111A	ALTERNATIVE TEMPORARY CRASH CUSHION	12
149004A	REMOVE ASBESTOS CONTAINING MATERIAL	14
149005A	SAMPLING AND ANALYSIS (PESTICIDE)	14
150001A	SALVAGE HANDRAILING	15
153250A	REMOVE POST SLEEVE	15
206569A	REMOTE CONTROL VALVE (CITY)	20
206572A	REMOTE CONTROL VALVE FOR DRIP SYSTEMS (CITY)	20
206756A	32-48 STATION IRRIGATION CONTROLLER (WALL MOUNTED)	20
208222A	DRIPPERLINE (CITY)	20
208443A	YAGI ANTENNA	20
208563A	DEEP WELL TREE IRRIGATION (CITY)	20
208683A	BALL VALVE (CITY)	20
208684A	AUTOMATIC FLUSH VALVE (CITY)	20
208685A	AIR/VACUUM RELIEF VALVE (CITY)	20
721810A	SLOPE PAVING (ROCK MULCH)	72
731521A	MINOR CONCRETE (RAISED MEDIAN)	51
770020A	CLOSED CIRCUIT TELEVISION (CITY)	77
770200A	DECORATIVE BRIDGE LIGHTING SYSTEM (CITY)	77
770301A	CUT AND CONNECT TO EXISTING 12" CEMENT-MORTAR LINED AND COATED (CML&C)	77
770302A	FURNISH AND INSTALL 12" CML&C WATER C900, CL 150 WITH FULL WELD DOUBLE PASS ALL JOINTS	77
770303A	FURNISH AND INSTALL INSULATING TEST CONNECTION (ITC) PER B-660	77
770304A	FURNISH AND INSTALL 1" AIR VALVE (AV)/AIR RELEASE (AR) PER - 598	77
770305A	REMOVE AND DISPOSE EXISTING 12" CML&C WATER	77
770306A	VERIFY AND EXPOSE FULL WELD DOUBLE PASS ALL JOINTS ON EXISTING 12" CML&C WATER	77
770307A	TEMPORARY HIGHLINE WATERLINE	77
770308A	CONTROL DENSITY FILL (CDF)	77
770309A	SOILS AND STAKING	77
770310A	RELOCATE AIR VALVE	77
770311A	RELOCATE BLOW OFF VALVE	77
770312A	INSTALL WATER METER	77
770501A	BORING UNDER STORM DRAIN LATERAL	77
770502A	TRENCH (DIRT) FOR CONDUIT INSTALLATION	77
770503A	TRENCH (PAVEMENT) FOR CONDUIT INSTALLATION	77
770504A	FURNISH AND INSTALL CONDUIT SCHEDULE 40 PVC – 5” (ELECTRICAL)	77
770505A	FURNISH AND INSTALL CONDUIT SCHEDULE 40 PVC – 4” (COMMUNICATIONS)	77
770506A	FURNISH AND INSTALL CONDUIT SCHEDULE 40 PVC – 3” (ELECTRICAL)	77
770507A	FURNISH AND INSTALL CONDUIT SCHEDULE 40 PVC – 1-1/2” (ELECTRICAL)	77
770508A	FURNISH AND INSTALL PRIMARY 1-1/C 1/0 KCMIL AL CABLE	77
770509A	FURNISH AND INSTALL 350 AWG 600V SINGLE PHASE CABLE	77
770510A	FURNISH AND INSTALL 1/0 AWG 600V SINGLE PHASE CABLE	77
770511A	FURNISH AND INSTALL SERVICE #8 AWG CABLE	77
770512A	FURNISH AND INSTALL 200A LOAD BREAK ELBOWS WITH TEST POINTS	77
770513A	FURNISH AND INSTALL 200A STRAIGHT SPLICE	77

Bid Items and Applicable Sections

Item code	Item description	Applicable section
770514A	FURNISH AND INSTALL 200A CAP WITH TEST POINT	77
770515A	FURNISH AND INSTALL 4 EA - 14” CABLE STEPS (12 STEPS)	77
770516A	FURNISH AND INSTALL 30” CABLE RACK	77
770517A	FURNISH AND INSTALL GROUND ASSEMBLY	77
770518A	FURNISH AND INSTALL MANHOLE (5’X10’-6”X7’) WITH TRAFFIC RATED LID	77
770519A	FURNISH AND INSTALL 25KVA TRANSFORMER	77
770520A	FURNISH AND INSTALL (48”X54”) TRANSFORMER PAD	77
770521A	FURNISH AND INSTALL STREET LIGHTS (11,500 LUMENS)	77
770522A	FURNISH AND INSTALL HANDHOLES (10.5” X 17” X 24”)	77
770523A	SAWCUT EXISTING AC PAVEMENT	77
770524A	REMOVE AND DISPOSE OF EXISTING AC PAVEMENT AND BASE	77
770525A	GRIND AC PAVEMENT	77
770526A	AGGREGATE BASE CLASS II (12”)	77
770527A	AC (6”) AND AC OVERLAY (0.15’)	77
770528A	CURB AND GUTTER (8")	77
770529A	SIDEWALK	77
770530A	TRAFFIC STRIPING, RAISED PAVEMENT MARKERS	77
770531A	ENERGIZE NEWLY INSTALLED SYSTEM (SWITCHING PROCEDURE BY MVU)	77
800500A	PICKET RAILING FENCE	83
820930A	POST SLEEVE	82
839719A	CONCRETE BARRIER (TYPE 732SW MODIFIED)	83
839741A	CONCRETE BARRIER (TYPE 60R)	83
840090A	PREFORMED THERMOPLASTIC PAVEMENT MARKING	84

^^

2 BIDDING

Add between the 1st and 2nd paragraphs of section 2-1.06B:

The Department makes the following supplemental project information available:

Supplemental Project Information

Means	Description
Included in the *Information Handout*	Materials Report Addendum #2 Geotechnical Design Report Geotechnical Design Report Addendum #1 Asbestos Survey Report Initial Site Assessment (2006) Foundation Report, Moreno Beach Drive Overcrossing (Replace), Bridge No. 56-0845, Moreno Valley, California, 08-Riv-60 PM 18.8/19.6, EA No. 08-32303, EMI Project No. 18-152, March 03, 2020 SCE Bridge Conduit Installation Plans SCE Relocate Facilities Plans – Work Order Maps Frontier Communications Relocation of Facilities Plans Environmental Commitments Record USACE 404 Permit CDFW 1602 Permit RWQCB 401 Permit
Available as specified in the *Standard Specifications*	Moreno Beach OC 56-0486 As-Built Design Cross Sections (.pdf and .dgn) Alignment Data (.alg) Roadway Design Alignments and Profiles (LandXML) Original Ground Survey (.dgn and .dtm) Digital Terrain Model (3-D .dgn) Digital Design Model (LandXML)
Included with the project plans	Log of Test Borings

^^

5 CONTROL OF WORK

Replace the 2nd and 3rd paragraphs of section 5-1.09A with:

Professionally facilitated project partnering is required.

Add to the end of section 5-1.20A:

During the progress of the work under this Contract, work under the following contracts may be in progress at or near the job site of this Contract:

Coincident or Adjacent Contracts

Contract no.	County–Route–Post Mile	Location	Type of work
EA 0N69U	Riverside – Route 60 – R0.0/22.3	Moreno Valley	Truck Climbing Lane
EA 1F3704	Riverside – Route 60 – R0.0/22.3, 7.5/16.3	Moreno Valley	Sign Panel Replacement

Coordinate lane closures and traffic handling with the Engineer and with contractors of coincident or adjacent projects. Potential conflicts may not be limited to the contracts listed above.

Add between the 2nd and 3rd paragraphs of section 5-1.36C(3):

Installation of the utilities shown in the following table requires coordination with your activities. Make the necessary arrangements with the utility company through the Engineer and submit a schedule:

1. Verified by a representative of the utility company
2. Allowing at least the time shown for the utility owner to complete its work

Utility Relocation and Contractor-Arranged Time for the Relocation

Utility	Utility address	Location	Working days
Frontier Communications Relocate facilities (Communication Line and Cabinet)	9 South Fourth Street Redlands, CA 92373	Ironwood Avenue (Between Oliver Street and Petit Street)	Utility owner needs 45 days to complete.
Southern California Edison Remove Facilities (Existing Service)	24487 Prelipp Road Wildomar, CA 92595 26100 Menifee Road Menifee, CA 92585	Remove Facilities South of Moreno Beach Drive Overcrossing (Between Eucalyptus and Eastbound Ramps)	Provide utility owner 8 weeks notice prior to the start of the utility removal. Utility owner needs 1 week to complete.
Southern California Edison Conduit in Overcrossing		Moreno Beach Drive Overcrossing	Provide utility owner 3 months notice prior to the start of the utility installation. Utility owner needs 2 weeks to complete.
Southern California Edison Remove Facilities (Existing Service)		Remove Facilities North of Moreno Beach Drive Overcrossing (Westbound Ramps and Ironwood Avenue)	Provide utility owner 8 weeks notice prior to the start of the utility removal. Utility owner needs 1 week to complete.

^^

6 CONTROL OF MATERIALS

Add to the beginning of section 6-1.02:

The Department furnishes you with:

- Model 2070 controller assembly, and model 332L, and 334L controller cabinets, including controller unit, completely wired controller cabinet, and detector sensor units
- • Components of battery backup system as follows:
  - Inverter/charger unit
  - Power transfer relay
  - Manually-operated bypass switch
  - Battery harness
  - Utility interconnect wires
  - Battery temperature probe
  - Relay contact wires

The Department furnishes you with completely wired 332L and 334L controller cabinets with auxiliary equipment but without controller unit at the District 8 Warehouse, 175 W. Cluster Street, San Bernardino, CA 92408. At least 48 hours before you pick up the materials, inform the Engineer of what you will pick up and when you will pick it up.

Add to section 6-1.03 of the RSS:

6-1.03B Submittals

6-1.03B(1) Work Plan

For local material, such as rock, gravel, earth, structure backfill, pervious backfill, imported borrow, and culvert bedding, obtained from a (1) noncommercial source, or (2) source not regulated under California jurisdiction, submit a local material plan for each material at least 60 days before placing the material. The local material plan must include:

1. Certification signed by you and an engineer who is registered as a civil engineer in the State or a professional geologist licensed as a professional geologist by the State stating:

   > I am aware local material from a noncommercial source or a source not regulated under CA jurisdiction must be sampled and analyzed for pH and lead and may require sampling and analysis under section 6-1.03B(3) for other constituents of concern based on the land use history. I am aware that local material sources must not contain ADL at concentrations greater than 80 mg/kg total lead or equal to or greater than 5 mg/L soluble lead as determined by the Waste Extraction Test (WET) Procedures, 22 CA Code of Regs § 66261.24(a)(2) App II. I am aware that a maximum quantity of material may be excavated at the site based on the minimum number of samples taken before excavating at the site under section 6-1.03B(3).

2. Land use history of the local material location and surrounding property
3. Sampling protocol
4. Number of samples per volume of local material
5. QA and QC requirements and procedures
6. Qualifications of sampling personnel
7. Stockpile history
8. Name and address of the analytical laboratory that will perform the chemical analyses
9. Analyses that will be performed for lead and pH
10. Other analyses that will be performed for possible hazardous constituents based on:
    - 10.1. Source property history
    - 10.2. Land use adjacent to source property
    - 10.3. Constituents of concern in the ground water basin where the job site is located

The plan must be sealed and signed by an engineer who is registered as a civil engineer in the State or a professional geologist licensed as a professional geologist by the State.

If the plan requires revisions, the Engineer provides comments. Submit a revised plan within 7 days of receiving comments. Allow 7 days for the review.

6-1.03B(2) Analytical Test Results

At least 15 days before placing local material, submit analytical test results for each local material obtained from a noncommercial source or a source not regulated under CA jurisdiction. The analytical test results must include:

1. Certification signed by an engineer who is registered as a civil engineer in the State or a professional geologist licensed as a professional geologist by the State stating:

   > The analytical testing described in the local material plan has been performed. I performed a statistical analysis of the test results using the US EPA's ProUCL software with the applicable 95 percent upper confidence limit. I certify that the material from the local material source is suitable for unrestricted use at the job site, it has a pH above 5.0, does not contain soluble lead in concentrations equal to or greater than 5mg/l as determined by the Waste Extraction Test (WET) Procedures, 22 CA Code of Regs § 66261.24(a)(2) App II, does not contain lead in concentrations above 80 mg/kg total lead, is free from all other contaminants identified in the local material plan, and will comply with the job site's basin plan and water quality objectives of the RWQCB.

2. Chain of custody of samples
3. Analytical results no older than 1 year

4. Statistical analysis of the data using US EPA's ProUCL software with a 95 percent upper confidence limit
5. Comparison of sample results to hazardous waste concentration thresholds and the RWQCB's basin plan requirements and water quality objectives for the job site location

6-1.03B(3) Sample and Analysis

Sample and analyze local material from a (1) noncommercial source or (2) source not regulated under CA jurisdiction:

1. Before bringing the local material to the job site
2. As described in the local material plan
3. Under US EPA Test Methods for Evaluating Solid Waste, Physical/Chemical Methods (SW-846)

The sample collection must be designed to generate a data set representative of the entire volume of proposed local material.

Before excavating at the (1) noncommercial material source or (2) a source not regulated under CA jurisdiction, collect the minimum number of samples and perform the minimum number of analytical tests for the corresponding maximum volume of local material as shown in the following table:

Minimum Number of Samples and Analytical Tests for Local Material

Maximum volume of imported borrow (cu yd)	Minimum number of samples and analytical tests
< 5,000	8
5,000–10,000	12 for the first 5,000 cu yd plus 1 for each additional 1,000 cu yd or portion thereof
10,000–20,000	17 for the first 10,000 cu yd plus 1 for each additional 2,500 cu yd or portion thereof
20,000-40,000	21 for the first 20,000 cu yd plus 1 for each additional 5,000 cu yd or portion thereof
40,000–80,000	25 for the first 40,000 cu yd plus 1 for each additional 10,000 cu yd or portion thereof
> 80,000	29 for the first 80,000 cu yd plus 1 for each additional 20,000 cu yd or portion thereof

Do not collect composite samples or mix individual samples to form a composite sample.

Analyze the samples using the US EPA's ProUCL software with a 95 percent upper confidence limit. All chemical analysis must be performed by a laboratory certified by the SWRCB's Environmental Laboratory Accreditation Program (ELAP).

The analytical test results must demonstrate that the local material:

1. Is not a hazardous waste
2. Has a pH above 5.0
3. Has an average total lead concentration, based upon the 95 percent upper confidence limit, at or below 80 mg/kg
4. Is free of possible contaminants identified in the local material plan
5. Complies with the RWQCB's basin plan for the job site location
6 Complies with the RWQCB's water quality objectives for the job site location

6-1.03C Local Material Management

Do not place local material until authorized.

If the Engineer determines the appearance, odor, or texture of any delivered local material suggests possible contamination, sample and analyze the material. The sampling and analysis is change order

work unless (1) hazardous waste is discovered or (2) the analytical test results indicate the material does not comply with section 6-1.03B(3).

Dispose of noncompliant local material at an appropriately permitted CA Class I, CA Class II or CA Class III facility. You are the generator of noncompliant local material.

Replace section 6-1.06 of the RSS for section 6-1 with:

6-1.06 BUY CLEAN CALIFORNIA ACT

6-1.06A Summary

The materials or products shown in the following table are subject to the Buy Clean California Act (Pub Cont Code § 3500 et seq.):

Material or product	Material specifications
Carbon steel rebar[a]	Section 52-1.02B, "Bar Reinforcement" Excludes epoxy-coated or galvanized reinforcement uses.
Structural steel[b]	Section 55-1.02D(1), "General," – Structural Steel and Other Materials tables and Section 99, "Building Construction" For hot-rolled, plate or hollow products.
Flat glass[c]	Section 99, "Building Construction"
Mineral wool board insulation[d]	Section 99, "Building Construction"

[a]For each mill providing 20,000 pounds or more on the project
[b]For each mill providing 5,000 pounds or more on the project
[c]For each manufacturer providing 2,000 square feet or more on the project
[d]For each manufacturer providing 4,000 square feet or more on the project

For product category rules for applicable materials or products, go to the METS website. Use the product category rule in effect on the date of bid opening unless otherwise authorized. An environmental product declaration is not required for a material or product for either of the following conditions:

1. Applicable product category rule has expired without replacement as of the bid opening date.
2. Applicable product category rule was issued less than 100 days before the bid opening date.

For projects with a bid opening date from December 1, 2019, through May 31, 2021, with total bid over $1 million and 175 or more original working days, submit an environmental product declaration as an informational submittal for each applicable material or product. Submit each environmental product declaration within 15 days of initial installation of the material or product.

6-1.06B Definitions

environmental product declaration: Independently verified document created and verified under International Organization for Standardization (ISO) 14025 for Type III environmental declarations that identifies the global warming potential emissions of the facility-specific material or product through a product stage life cycle assessment.

product category rule: Program operator established rule based on the science of life cycle assessment that governs the development of the environmental product declaration for the material or product.

product stage: Boundary of the environmental product declaration that includes (1) raw material supply, (2) transportation processes, and (3) processing operations, including operations such as melting, mixing, fabrication, finishing, curing, cooling, trimming, packaging and loading for transport delivery. Commonly referred to as a "cradle-to-gate" life cycle assessment.

program operator: Independent agency that supervises and confirms the full environmental product declaration development process under ISO 14025.

raw material supply: Upstream processes which can include allocations, extraction, refinement, reclamation, handling and processing of the constituents used in producing the material or product.

transportation processes: Includes transportation of raw, reclaimed or recycled material constituents from the supplier to the gate of the manufacturer, producer or fabricator. Includes transport of related waste products.

6-1.06C Submittals

At least 15 days before submitting environmental product declarations, you must register on the Department's Data Interchange for Materials Engineering. Follow the registration process at:

https://dime.dot.ca.gov/

Submit environmental product declarations for applicable materials or products to the Department's Data Interchange for Materials Engineering and provide PDF copies to the Engineer. Carbon steel rebar or structural steel environmental product declarations must be mill produced.

Immediately notify the Engineer if a program operator has determined their product category rule does not allow for development of a facility-specific environmental product declaration for an applicable material or product. Include written correspondence from the program operator. If the Engineer determines the development of a facility-specific environmental product declaration for an applicable material or product cannot be achieved, no environmental product declaration will be required for that specific material or product.

6-1.06D Quality Assurance

Not Used

^^

7 LEGAL RELATIONS AND RESPONSIBILITY TO THE PUBLIC

Replace *Reserved* in the RSS for section 7-1.02K(6)(j)(iii) with:

Section 7-1.02K(6)(j)(iii) includes specifications for handling, removing, and disposing of unregulated earth material containing lead. Management of this material exposes workers to health hazards that must be addressed in your lead compliance plan. This material contains average lead concentrations below 80 mg/kg total lead and below 5 mg/L soluble lead and is not regulated by DTSC as a hazardous substance or a hazardous waste. This material does not require disposal at a permitted landfill or solid waste disposal facility. The RWQCB has jurisdiction over reuse of this material at locations outside the job site limits.

Unregulated earth material exists throughout the job site.

Lead is typically found within the top 2 feet of material within the highway. Reuse all of the excavated material on the right-of-way. Unregulated earth material containing lead has been detected to a depth of 5 within the job site. Unregulated levels of lead found range from less than 2.73 to 378 mg/kg total lead with an average concentration of less than 80 mg/kg total lead as analyzed by EPA test method 6010 or EPA test method 7000 series and based upon a 95 percent upper confidence limit. Unregulated levels of lead on the job site have a predicted average soluble concentration of 4.11 mg/L as analyzed by the California Waste Extraction Test and based upon a 95 percent upper confidence limit.

Handle the material under all applicable laws, rules, and regulations, including those of the following agencies:

1. Cal/OSHA
2. CA RWQCB, Region Santa Ana (Region 8)

If unregulated material is disposed of:

1. Submit as an informational submittal at least 15 days before disposal, the form titled "Agreement between a Contractor Working on State Facilities and a Real Property Owner for Disposing

Construction-related Material Suitable for Use on Residential Zoned Property" which discloses the lead concentration of the material to the receiving property owner and obtains authorization for disposal on the property. Give a copy of the signed form to the property owner.
2. You are responsible for any additional sampling and analysis required by the receiving property owner.

If you choose to dispose of unregulated material at a commercial landfill:

1. Transport it to a Class III or Class II landfill appropriately permitted to receive the material
2. You are responsible for identifying the appropriately permitted landfill to receive the material and for all associated trucking and disposal costs, including any additional sampling and analysis required by the receiving landfill

^^

8 PROSECUTION AND PROGRESS

Replace *Reserved* in section 8-1.04C with:

Do not start job site activities until the Department authorizes or accepts your submittal for:

1. Contractor-supplied biologist
2. WPCP or SWPPP, whichever applies
3. Notification of DRA or DRB nominee and disclosure statement
4. Contingency plan for opening closures to traffic
5. Asbestos Compliance Plan
6. Lead Compliance Plan
7. Diesel Fuel Reduction Plan

If the submittals for Contractor-supplied biologist is authorized, you may enter the job site only to measure controlling field dimensions and locate utilities.

Do not start other job site activities until all the submittals from the above list are authorized or accepted and the following information is received by the Engineer:

1. Notice of Materials To Be Used form.
2. Written statement from the vendor that the order for the sign panels has been received and accepted by the vendor. The statement must show the dates that the materials will be shipped.
3. Written statement from the vendor that the order for electrical material has been received and accepted by the vendor. The statement must show the dates that the materials will be shipped.
4. Written statement from the vendor that the order for structural steel has been received and accepted by the vendor. The statement must show the dates that the materials will be shipped.

You may start job site activities before the 55th day after Contract approval if you:

1. Obtain specified authorization or acceptance for each submittal before the 55th day
2. Receive authorization to start

Submit a notice 72 hours before starting job site activities. If the project has more than 1 location of work, submit a separate notice for each location.

DIVISION II GENERAL CONSTRUCTION

10 GENERAL

^^

Add to the end of section 10-1.02B:

Install loop detectors in the uppermost layer of the new pavement.

^^

12 TEMPORARY TRAFFIC CONTROL

Replace *Reserved* in section 12-3.11B(5) of the RSS for section 12 with:

12-3.11B(5)(a) General

Not Used

12-3.11B(5)(b) Construction Project Funding Identification Signs

Construction project funding identification C48(CA) sign must comply with the policy for construction funding identification signs in section 6F.109(CA) of the *California MUTCD* and specifications on the Department's Traffic Operations website.

Sign must be mounted on a wood post complying with section 82-3.

Sign panels must be framed, single-sheet, aluminum panels complying with section 82-2.

Background on the sign must be Type XI retroreflective sheeting. Type XI retroreflective sheeting must be on the Authorized Material List for signing and delineation materials.

Legend must be retroreflective except for nonreflective black letters and numerals.

Do not add information to the construction project funding identification sign unless authorized. Add the following funding partner agency pictographs:

Partner funding agency	Height dimension of pictograph with notes
City of Moreno Valley	15 inches high including all text legend
Caltrans	15 inches high including all text legend

Replace *Reserved* in section 12-3.11C(3) of the RSS for section 12 with:

12-3.11C(3)(a) General

Not Used

12-3.11C(3)(b) Construction Project Funding Identification Signs

Install two 132 by 78 inch construction project funding identification signs at the location determined by the Engineer within 5 working days of Contract approval.

Add to the beginning of section 12-3.32C:

Place PCMSs at the locations shown and in advance of the 1st warning sign for each:

1. Stationary lane closure
2. Off-ramp closure
3. Shoulder closure
4. Speed reduction zone

Add between the 9th and 10th paragraphs of section 12-3.32C:

Start displaying the message on the sign 30 minutes before closing the lane or shoulder or when directed by the Engineer.

Replace section 12-3.24 with:

12-3.24 Alternative Temporary Crash Cushion

12-3.24(1) General

12-3.24(1)(a) Summary

Section 12-3.24 includes specifications for constructing alternative temporary crash cushion.

12-3.24(1)(b) Definitions

Not Used

12-3.24(1)(c) Submittals

Submit a certificate of compliance for alternative temporary crash cushion.

12-3.24(1)(d) Quality Assurance

At least 10 days before installation, submit a certificate of compliance and a minimum of two copies of the manufacturer's drawings, installation instruction manual, and maintenance manual for each model of alternative temporary crash cushion to be used. You must have a copy of the manufacturer's drawings, installation instructions manual, and maintenance manual for each alternative temporary crash cushion to be used on the job site during installation.

Use personnel trained by the manufacturer to install alternative temporary crash cushion. A record of training provided by the manufacturer may be requested by the Engineer at any time.

12-3.24(2) Materials

The alternative temporary crash cushion must be one of the following or a Department-authorized equal:

1. Type ACZ-350 - alternative temporary crash cushion must be ACZ-350 Alternative Temporary Crash Cushion manufactured by Energy Absorption Inc. and must include the connection components. Type ACZ-350 alternative temporary crash cushion - Type ACZ-350 alternative temporary crash cushion must be test level 3, manufactured by Energy Absorption Inc. The ACZ-350 Alternative Temporary Crash Cushion can be obtained from the manufacturer:

Address	Telephone no.
NATIONAL TRENCH SAFETY SAN FRANCISCO BAY AREA 45945 WARM SPRINGS BLVD	(510) 490-2140

2. Type ABSORB – 350(TL-3) - Type ABSORB-350 alternative temporary crash cushion must be Crash Cushion test level 3 manufactured by Barrier Systems, Inc. Use the 9 element system to connect to temporary railing (Type K) and must include items detailed for Type ABSORB – 350 crash cushion shown on the plans. The ABSORB- 350 alternative temporary crash cushion can be obtained from the distributor:

Address	Telephone no.
STATEWIDE TRAFFIC SAFETY & SIGNS, INC 522 LINDON LANE NIPOMO, CA 93444	(802) 929-3723

3. Type SLED-SENTRY LONGITUDINAL ENERGY DISSIPATOR END TREATMENT A three module gating, non-redirective alternative temporary crash cushion must be SLED Alternative Temporary Crash Cushion manufactured by TrafFix Devices, Inc., and must include the connection components. Type SLED alternative temporary crash cushion - Type SLED alternative temporary crash cushion must be test level 3, manufactured by TrafFix Devices, Inc,. The SLED alternative temporary crash cushion can be obtained from the manufacturer:

Address	Telephone no.
TRAFFIX DEVICES, INC 160 AVENIDA LA PATA SAN CLEMENTE, CA 92673	(949) 361-5663

4. Type ADIEM-350 -Type ADIEM-350 alternative temporary crash cushion must be Crash Cushion test level 3 manufactured by Trinity Industries, Inc, must include the items shown on the manufacturer plans and installation instructions. The ADIEM-350 alternative temporary crash cushion can be obtained from the manufacturer:

Address	Telephone no.
CALIFORNIA DISTRIBUTOR CNW CONSTRUCTION 2419 PALMA DRIVE VENTURA CA 93003	(805) 642-0204

12-3.24(3) Construction

Install alternative temporary crash cushion under the manufacturer's instructions.

Attach a Type R or Type P marker panel to the front of the alternative temporary crash cushion if the closest point of the crash cushion array is within 12 feet of the traveled way. Firmly fasten the marker panel to the crash cushion with commercial-quality hardware or by other authorized methods.

Maintain alternative temporary crash cushion in place at each location, including times when work is not actively in progress.

Repair damaged alternative temporary crash cushion immediately. Remove and replace crash cushions damaged beyond repair. Replacement and repair of crash cushions damaged by public traffic is change order work.

12-3.24(4) Payment

Not Used

Replace the table in the definition of *designated holidays* in section 12-4.02A(2) with:

Designated Holidays

Holiday	Date observed
New Year's Day	January 1st
Memorial Day	Last Monday in May
Independence Day	July 4th
Labor Day	1st Monday in September
Thanksgiving Day	4th Thursday in November
Christmas Day	December 25th

Add to section 12-4.02A(2):

special days: Martin Luther King Jr. Day, Washington’s Birthday, Cesar Chavez Day, Good Friday thru Easter Sunday, Veterans Day, Day after Thanksgiving, December 20 thru January 2.

Add between the 1st and 2nd paragraphs of section 12-4.02A(3)(c):

Submit a contingency plan for each of the following activities:

1. Activity requiring a complete freeway, ramp, or roadway closure
2. Cold-planning asphalt concrete for depths of 2 inches or greater
3. HMA paving
4. Asphalt grinding
5. Bridge work
6. Placement of bar reinforcing steel or structural members
7. Falsework erection or removal, including adjustments

8. Bridge demolition
9. Striping

Add between the 3rd and 4th paragraphs of section 12-4.02C(1):

Add to the end of section 12-4.02C(1):

Keep the full width of the traveled way open to traffic when no active construction activities are occurring in the traveled way or within 6 feet of the traveled way.

Keep the full width of the ramp traveled way open for use by traffic on designated holidays and special days.

For each 10-minute interval or fraction thereof past the time specified to open the closure, the amount for liquidated damages per interval shown in the table below is deducted. Liquidated damages are limited to 5 percent of the total bid per occurrence. Liquidated damages are not assessed if the Engineer orders the closure to remain in place beyond the scheduled pickup time.

Type of facility	Route	Direction or segment	Period	Liquidated damages/interval
Mainline & Ramps	RIV 60	EB	1st half hour 2nd half hour 2nd hour and beyond	$1,000 /10 minutes $1,000 /10 minutes $1,000 /10 minutes
Complete Closure	RIV 60	EB	1st half hour 2nd half hour 2nd hour and beyond	$1,400 /10 minutes $2,100 /10 minutes $2,800 /10 minutes
Mainline & Ramps	RIV 60	WB	1st half hour 2nd half hour 2nd hour and beyond	$1,000 /10 minutes $1,000 /10 minutes $1,100 /10 minutes
Complete Closure	RIV 60	WB	1st half hour 2nd half hour 2nd hour and beyond	$1,650 /10 minutes $2,475 /10 minutes $3,300 /10 minutes
City	Moreno Beach Drive	NB & SB Eucalyptus Avenue/Ironwood Avenue	1st half hour 2nd half hour 2nd hour and beyond	$1,000 /10 minutes $1,000 /10 minutes $1,000 /10 minutes
Complete Closure	Moreno Beach Drive	NB & SB Eucalyptus Avenue/Ironwood Avenue	1st half hour 2nd half hour 2nd hour and beyond	$1,400 /10 minutes $2,100 /10 minutes $2,800 /10 minutes

Add to the list in the 1st paragraph of section 12-4.02C(3)(a):

3. Work is on the traveled way but within 6 feet of the adjacent traffic lane

Add to the end of section 12-4.02C(3)(a):

If you use an impact attenuator vehicle as a shadow vehicle, you are not required to close the adjacent traffic lane for the following activities:

1. Saw cutting of concrete slabs
2. Installing loop detectors

If work vehicles or equipment are parked on the shoulder within 6 feet of a traffic lane of a freeway or expressway, close the shoulder area as shown.

Replace *Reserved* in section 12-4.02C(3)(e) with:

From 3 hours before to 2 hours after special events or events at the venues shown in the table titled "Special Events and Venues," do not perform work that encroaches onto the roadway, connector or ramps impacted by the events unless otherwise permitted by the District Traffic Manager.

The special events and venues that could impact closures, as determined by the Resident Engineer, are listed in the table titled "Special Events and Venues" below.

Special Events and Venues

Venue/ Special Events	Affected Routes	Route Impact	Route/s Limits	Usual Month of event (See website for the exact date	Website	Contact #
Glen Helen Amphitheater (Glen Helen)	215 15	*** **	University Pkwy to I-15/215 Connector I-60 to Devore Road	Various events May-Oct yearly See web site	www.livenation.com	(909) 880-3090
Glen Helen Speedway	215 15	*** **	University Pkwy to I-15/215 Connector I-60 to Devore Road	Various events Apr-Dec yearly See web site	www.glenhelen.com	(909) 880-3090
Redland Bicycle Classic	38	***	SR-38 from Fawnskin to Stanfield Cut-off	April	http://www.redlandsclassic.com/	(909) 798-0865
Amgen Tour of California	18 38	** **	Big Bear Lake	May	www.amgentourofcalifornia.com	ATOCGeneralInfo@amgentourofcalifornia.com
Auto Club Speedway (California)	10 15 210 66 60	*** *** *** *** ***	LA I-57 to SBD I-215 I-15/215 to SR-91 Haven to I-215 Haven to Cherry I-15 to County Line	Various events Thru the year See web site	www.autoclubspeedway.com	(909) 429-5000
Temecula Balloon and Wine Festival	15	**	SR-79 (Winchester Rd) and Rancho California	May	www.tvbwf.com	(951) 676-6713
Career Builder Challenge	10	**	Palm Springs off ramp at SR-111	January	http://www.careerbuilderchallenge.com/	(888) 672-4673
ANA Inspiration	10	**	Palm Springs off ramp at SR-111	March/ April	http://www.anainspiration.com/	info@ANAinspiration.com
Festival of Lights (Downtown Riverside)	91	**	I-15 to I-215/SR-60 split	November	http://www.riversidedowntown.org/	(951) 683-7100
March Air Show March Air Reserve Base	215	***	Cactus to Ramona Express Way	April	http://www.marchfieldairfest.com	(951) 655-1110
UCR Graduation	60 215	*** ***	I-215/SR-60/SR-91 split to Central Ave	June	www.commencement.ucr.edu	(951) 787-3144
Laughlin River Run	40	***	I-40/ From I-15 to Arizona State Line	April	http://www.laughlinriverrun.com	(949) 502-3434
Thunder & Lightning Powwow	10	***	I-10/ Morongo Valley	September	http://www.morongocasinoresort.com/pow2.cfm	(800) 252-4499 ext.#: 23800
Coachella Valley Music and Arts Festival	10 60 111	*** ***	I-10/San Bernardino to Coachella 60/Moreno Valley to I-10 111/Whitewater to Coachella	April	www.coachella.com	info@coachella.com
Stagecoach Music Festival	10 60 111	*** ***	I-10/San Bernardino to Coachella 60/Moreno Valley to I-10 111/Whitewater to Coachella	April	http://www.stagecoachfestival.com/	info@stagecoachfestival.com
King of Hammers	247	***	sbd18 to 62	Around Feb. (for the date go online/call)	http://www.griffinrad.com/kingofthehammers/ https://ultra4racing.com/race/17	1-800-722-3723 or Dave Cole 909 273 0216
Redlands University Graduation	10	***	I-10 Redlands	April	http://www.redlands.edu/	(909) 793-2121

High School Graduation	10	***	I-10 Redlands	June	http://rhs.redlandsusd.net/	(909) 307-5300
Lake Elsinore Storm Baseball game	15	**	I-15 Lake Elsinore	April through September (various days and times)	http://www.mlb.com/lake-elsinore	(951) 245-4487

** Designates Moderate Impact (20 minute delay or less)
*** Designates High Impact (30 minute delay or less)

Note 1: The dates of events change yearly. Contact information and websites are provided to verify exact dates.

Note 2: Other special events do exist that impact our freeway and highway system. Close coordination with the local agencies and other impacted entities must be carried out before conducting work that requires full or partial closures.

Replace *Reserved* in section 12-4.02C(3)(f) with:

Closure restrictions for designated holidays and special days are shown in the following table:

Lane Closure Restrictions For Designated Holidays And Special Days											
Thu	Fri	Sat	Sun	Mon	Tues	Wed	Thu	Fri	Sat	Sun	Mon
x	**H** xx	xx	xx								
	SD xx										
x	xx	**H** xx	xx								
		SD xx									
	x	xx	**H** xx	xx							
			SD xx								
	x	xx	xx	**H** xx	xxx						
	x	xx	xx	**SD** xx	xxx						
				x	**H** xx						
				x	**SD** xx						
					x	**H** xx					
						SD xx					
						x	**H** xx	xx	xx	xx	xxx
							SD xx				

Legend:

	Refer to lane requirement charts.
x	The full width of the traveled way must be open for use by traffic after **0600**.
xx	The full width of the traveled way must be open for use by traffic.
xxx	The full width of the traveled way must be open for use by traffic until **1800**.
H	Designated holiday
SD	Special day

Replace *Reserved* in section 12-4.02C(3)(g) with:

Freeway lane closures must comply with the requirements shown in the following charts:

Chart No. G1
EA#: 32303
ID#: 0812000059
Freeway Lane Requirements

County: RIV	Route/Direction: 60/EB	Post Mile: 18.1/19.6

Closure limits:

Hour	00	01	02	03	04	05	06	07	08	09	10	11	12	13	14	15	16	17	18	19	20	21	22	23	24
Mon–Thu	1	1	1	1	1	2				S	S	S	S	S	S									1	1
Fri	1	1	1	1	1	2																		2	1
Sat	1	1	1	1	1	1																		2	1
Sun	1	1	1	1	1	1																		2	1

Legend:

1	Provide at least 1 through **Freeway** lane open in the direction of travel.
2	Provide at least 2 adjacent through **Freeway** lanes open in the direction of travel.
S	Shoulder closure is allowed (right / left).
	Work is allowed within the highway where a shoulder or lane closure is not required.

REMARKS:

Chart No. G2
EA#: 32303
ID#: 0812000059
Freeway Lane Requirements

County: RIV	Route/Direction: 60/WB	Post Mile: 18.8/20.23

Closure limits:

Hour	00	01	02	03	04	05	06	07	08	09	10	11	12	13	14	15	16	17	18	19	20	21	22	23	24
Mon–Thu	1	1	1	1	2	2				S	S	S	S	S	S									1	1
Fri	1	1	1	1	2	2																		2	1
Sat	1	1	1	1	1	1																		2	1
Sun	1	1	1	1	1	1																		2	1

Legend:

1	Provide at least 1 through **Freeway** lane open in the direction of travel.
2	Provide at least 2 adjacent through **Freeway** lanes open in the direction of travel.
S	Shoulder closure is allowed (right / left).
	Work is allowed within the highway where a shoulder or lane closure is not required.

REMARKS:

Replace *Reserved* in section 12-4.02C(3)(h) with:

Comply with the requirements for the complete **freeway** closure shown in the following charts:

Chart No. H1
EA#: 32303
ID#: 0812000059
Complete Freeway Closure Hours

County: RIV	Route/Direction: 60/EB	Post Mile: 19.118

Closure limits:

Hour	00	01	02	03	04	05	06	07	08	09	10	11	12	13	14	15	16	17	18	19	20	21	22	23	24
Mon–Thu	C	C	C	C	C																			C	C
Fri	C	C	C	C	C																				C
Sat	C	C	C	C	C	C	C																		C
Sun	C	C	C	C	C	C	C																	C	C

Legend:

C **Freeway** may be closed completely.

No complete closure is allowed.

REMARKS: **ONLY 10 FULL CLOSURES ARE ALLOWED WITH 15% DIVERGENCE. REFER TO SHEET MI-6 FOR TRAFFIC DETOUR.**

Chart No. H2
EA#: 32303
ID#: 0812000059
Complete Freeway Closure Hours

County: RIV	Route/Direction: 60/WB	Post Mile: 19.118

Closure limits:

Hour	00	01	02	03	04	05	06	07	08	09	10	11	12	13	14	15	16	17	18	19	20	21	22	23	24
Mon–Thu	C	C	C	C																				C	C
Fri	C	C	C	C																					C
Sat	C	C	C	C	C	C																			C
Sun	C	C	C	C	C	C	C																		C

Legend:

C	**Freeway** may be closed completely.
	No complete closure is allowed.

REMARKS: **ONLY 10 FULL CLOSURES ARE ALLOWED WITH 15% DIVERGENCE. REFER TO SHEET MI-6 FOR TRAFFIC DETOUR.**

Replace *Reserved* in section 12-4.02C(3)(j) with:

Comply with the requirements for the ***complete ramp closure*** shown in the following charts:

Chart No. J1
EA#: 32303
ID#: 0812000059
Complete Ramp Closure Hours

County: RIV	Route/Direction: 60/EB	Post Mile: 19.014 & 19.118

Closure limits: EB off to Moreno Beach & EB on fr Moreno Beach

Hour	00	01	02	03	04	05	06	07	08	09	10	11	12	13	14	15	16	17	18	19	20	21	22	23	24
Mon–Thu	C	C	C	C	C	C				S	S	S	S	S	S									C	C
Fri	C	C	C	C	C	C																		C	C
Sat	C	C	C	C	C	C	C																	C	C
Sun	C	C	C	C	C	C	C																	C	C

Legend:

C	Ramp may be closed completely.
S	Shoulder may be closed completely.
	Work is allowed within the highway where a shoulder or lane closure is not required.

REMARKS: **REFER TO SHEETS MI-3 AND MI-5 FOR TRAFFIC DETOUR.**

Chart No. J2
EA#: 32303
ID#: 0812000059
Complete Ramp Closure Hours

County: RIV	Route/Direction: 60/WB	Post Mile:19.117 & 19.222

Closure limits: WB on fr Moreno Beach & WB off to Moreno Beach

Hour	00	01	02	03	04	05	06	07	08	09	10	11	12	13	14	15	16	17	18	19	20	21	22	23	24
Mon–Thu	C	C	C	C	C	C																		C	C
Fri	C	C	C	C	C	C																		C	C
Sat	C	C	C	C	C	C																		C	C
Sun	C	C	C	C	C	C	C																	C	C

Legend:

C Ramp may be closed completely.

Work is allowed within the highway where a shoulder or lane closure is not required.

REMARKS: **REFER TO SHEETS MI-1, MI-2, AND MI-3 FOR TRAFFIC DETOUR.**

Chart No. J3
EA#: 32303
ID#: 0812000059
Complete Ramp Closure Hours

County: RIV	Route/Direction: 60/EB	Post Mile: 19.014 & 19.118

Closure limits: EB off to Moreno Beach & EB on from Moreno Beach

Hour	00	01	02	03	04	05	06	07	08	09	10	11	12	13	14	15	16	17	18	19	20	21	22	23	24
Mon–Thu	C	C	C	C	C	C																			
Fri																								C	C
Sat	C	C	C	C	C	C	C	C	C	C	C	C	C	C	C	C	C	C	C	C	C	C	C	C	C
Sun	C	C	C	C	C	C	C	C	C	C	C	C	C	C	C	C	C	C	C	C	C	C	C	C	C

Legend:

C Ramp may be closed completely.

Work is allowed within the highway where a shoulder or lane closure is not required.

REMARKS: **ONLY ONE EXTENDED CLOSURE IS ALLOWED. REFER TO SHEETS MI-3 AND MI-5 FOR TRAFFIC DETOUR.**

Chart No. J4
EA#: 32303
ID#: 0812000059
Complete Ramp Closure Hours

County: RIV	Route/Direction: 60/WB	Post Mile:19.117 & 19.222

Closure limits: WB on from Moreno Beach & WB off to Moreno Beach

Hour	00	01	02	03	04	05	06	07	08	09	10	11	12	13	14	15	16	17	18	19	20	21	22	23	24

Mon–Thu	C	C	C	C	C	C																		
Fri																						C	C
Sat	C	C	C	C	C	C	C	C	C	C	C	C	C	C	C	C	C	C	C	C	C	C	C	C
Sun	C	C	C	C	C	C	C	C	C	C	C	C	C	C	C	C	C	C	C	C	C	C	C	C

Legend:

C Ramp may be closed completely.

Work is allowed within the highway where a shoulder or lane closure is not required.

REMARKS: **RAMP SHALL BE ALLOWED TO BE FULLY CLOSED, ONLY TWICE. THE STARTING DAY & TIME SHALL BE ON FRIDAY AT 10PM AND THE ENDING DAY & TIME SHALL BE ON MONDAY AT 6AM. REFER TO SHEETS MI-1, MI-2, AND MI-3 FOR TRAFFIC DETOUR.**

Chart No. J5
EA#: 32303
ID#: 0812000059
Complete Ramp Closure Hours

County: RIV	Route/Direction: 60/EB	Post Mile: 18.564 & 19.014

Closure limits: EB off to Moreno Beach & EB on from Moreno Beach

Hour	00	01	02	03	04	05	06	07	08	09	10	11	12	13	14	15	16	17	18	19	20	21	22	23	24
Mon–Thu	C	C	C	C	C	C	C	C	C	C	C	C	C	C	C	C	C	C	C	C	C	C	C	C	C
Fri	C	C	C	C	C	C	C	C	C	C	C	C	C	C	C	C	C	C	C	C	C	C	C	C	C
Sat	C	C	C	C	C	C	C	C	C	C	C	C	C	C	C	C	C	C	C	C	C	C	C	C	C
Sun	C	C	C	C	C	C	C	C	C	C	C	C	C	C	C	C	C	C	C	C	C	C	C	C	C

Legend:

C Ramp may be closed completely.

Work is allowed within the highway where a shoulder or lane closure is not required.

REMARKS: **ONLY ONE 10 DAY RAMP CLOSURE IS ALLOWED PER RAMP. REFER TO SHEETS MI-3 AND MI-5.**

Chart No. J6
EA#: 32303
ID#: 0812000059
Complete Ramp Closure Hours

County: RIV	Route/Direction: 60/WB	Post Mile:19.117 & 19.222

Closure limits: WB on from Moreno Beach & WB off to Moreno Beach

Hour	00	01	02	03	04	05	06	07	08	09	10	11	12	13	14	15	16	17	18	19	20	21	22	23	24
Mon–Thu	C	C	C	C	C	C	C	C	C	C	C	C	C	C	C	C	C	C	C	C	C	C	C	C	C
Fri	C	C	C	C	C	C	C	C	C	C	C	C	C	C	C	C	C	C	C	C	C	C	C	C	C
Sat	C	C	C	C	C	C	C	C	C	C	C	C	C	C	C	C	C	C	C	C	C	C	C	C	C
Sun	C	C	C	C	C	C	C	C	C	C	C	C	C	C	C	C	C	C	C	C	C	C	C	C	C

Legend:

C Ramp may be closed completely.

Work is allowed within the highway where a shoulder or lane closure is not required.

REMARKS: **ONLY ONE 10 DAY RAMP CLOSURE IS ALLOWED PER RAMP. REFER TO SHEETS MI-1, MI-2, AND MI-3 FOR TRAFFIC DETOUR.**

Replace *Reserved* in section 12-4.02C(3)(m) with:

Comply with the requirements for a complete city street closure shown in the following charts:

Chart No. M1
Complete City Street Closure Hours

Location: Moreno Beach Dr	Direction: NB and SB	

Closure limits: between Eucalyptus Ave and Ironwood Ave

Hour	00	01	02	03	04	05	06	07	08	09	10	11	12	13	14	15	16	17	18	19	20	21	22	23	24
Mon–Thu	C	C	C	C	C	C	1	1	1	1	1	1	1	1	1	1	1	1	1	1	1	1	1	1	1
Fri	1	1	1	1	1	1	1	1	1	1	1	1	1	1	1	1	1	1	1	1	1	1	1	C	C
Sat	C	C	C	C	C	C	C	C	C	C	C	C	C	C	C	C	C	C	C	C	C	C	C	C	C
Sun	C	C	C	C	C	C	C	C	C	C	C	C	C	C	C	C	C	C	C	C	C	C	C	C	C

Legend:

C	Street may be completely closed.
1	Provide at least 1 City street lane open in the direction of travel.

REMARKS: The number of through traffic lanes in each direction of travel is 1.
1. Full closure will be allowed during 55-hour weekend ramp closures
2. Refer to MI-2 and MI-5 for Moreno Beach Drive detour
3. Only four extended weekend closures are allowed
4. Provide Shuttle Service for pedestrians during closure

Chart No. M2
Complete City Street Closure Hours

Location: Moreno Beach Dr	Direction: NB and SB	

Closure limits: between Eucalyptus Ave and Ironwood Ave

Hour	00	01	02	03	04	05	06	07	08	09	10	11	12	13	14	15	16	17	18	19	20	21	22	23	24
Mon–Thu	C	C	C	C	1	1	1	1	1	1	1	1	1	1	1	1	1	1	1	1	1	1	1	C	C
Fri	C	C	C	C	1	1	1	1	1	1	1	1	1	1	1	1	1	1	1	1	1	1	1	1	C
Sat	C	C	C	C	C	C	1	1	1	1	1	1	1	1	1	1	1	1	1	1	1	1	1	1	C
Sun	C	C	C	C	C	C	C	1	1	1	1	1	1	1	1	1	1	1	1	1	1	1	1	1	C

Legend:

C	Street may be completely closed.
1	Provide at least 1 City street lane open in the direction of travel.

REMARKS: The number of through traffic lanes in each direction of travel is 1.
1. Refer to MI-2 for Moreno Beach Drive detour
2. Provide Shuttle Service for pedestrians during closure

Chart No. M3
Complete City Street Closure Hours

Location: Moreno Beach Dr	Direction: NB and SB	

Closure limits: between Eucalyptus Ave and Ironwood Ave

Hour	00	01	02	03	04	05	06	07	08	09	10	11	12	13	14	15	16	17	18	19	20	21	22	23	24
Mon–Thu	C	C	C	C	C	C	C	C	C	C	C	C	C	C	C	C	C	C	C	C	C	C	C	C	C
Fri	C	C	C	C	C	C	C	C	C	C	C	C	C	C	C	C	C	C	C	C	C	C	C	C	C
Sat	C	C	C	C	C	C	C	C	C	C	C	C	C	C	C	C	C	C	C	C	C	C	C	C	C
Sun	C	C	C	C	C	C	C	C	C	C	C	C	C	C	C	C	C	C	C	C	C	C	C	C	C

Legend:
C Street may be closed.

REMARKS: The number of through traffic lanes in each direction of travel is 1.
1. Full closure of Moreno Beach Drive will be allowed during 10-day closure of ramps only
2. Refer to MI-3 for Moreno Beach Drive detour
3. Provide Shuttle Service for pedestrians during closure

Add to the end of the 1st paragraph of section 12-4.02C(7)(a):

except you may use a moving closure during traffic striping and pavement marker placement using a bituminous adhesive. Do not use a moving lane closure when grinding for recessed striping and recessed markers.

Add to the end of section 12-4.02C(7)(a):

Except where prohibited, use an impact attenuator vehicle:

1. To follow behind equipment and workers who are placing and removing components of a closure. Operate the flashing arrow sign in the arrow or caution mode during this activity, whichever applies. Follow at a distance that prevents intrusion into the work space from passing traffic.
2. As a shadow vehicle in a moving lane closure.

After placing components of a stationary traffic control system, you may place the impact attenuator vehicle in advance of the work area or at another authorized location to protect traffic and workers.

Add to the end of section 12-4.02C(7)(b):

Additional advance flaggers are required.

Except for one-way-reversing traffic-control lane closures, the maximum length of the work area inside a closure is 2 miles.

Not more than 2 stationary closures are allowed in each direction of travel at one time.

Concurrent stationary closures in the same direction of travel must be spaced no closer than 2 miles apart. Closures in the same direction of travel on alternating inside lanes and outside lanes must be spaced by an additional 2 miles.

Closure spacing is the distance between the last cone of the upstream closure and the temporary sign W20-1 of the downstream closure. The number of lanes open in the upstream closures must be less than

or equal to the number of lanes open in the downstream closures. For multiple closures in each direction of travel, pick up the downstream closures first.

For a stationary one-way-reversing traffic-control lane closure, you may stop traffic in 1 direction for periods not to exceed 15 minutes. After each stoppage, all accumulated traffic for that direction must pass through the work zone before another stoppage is made.

The maximum length of a single stationary one-way-reversing traffic-control lane closure is 2 miles between flaggers.

Not more than 2 stationary one-way-reversing traffic-control lane closures will be allowed at one time. Concurrent closures in the same direction of travel must be spaced no closer than 2 miles apart.

Transport bicyclists through the one-way-reversing traffic-control work zone.

For traffic under one-way-reversing traffic control on unpaved areas, the cones shown along the centerline are not required.

You may use a pilot car to control traffic. If a pilot car is used to control traffic, the cones shown along the centerline are not required. Pilot cars must have cellular or radio contact with other pilot cars and personnel in the work zone. The maximum speed of the pilot cars convoying or controlling traffic through the traffic control zone is 25 mph. Pilot cars must only use traffic lanes open to traffic.

Add to the end of section 12-4.02C(8)(a):

For a complete freeway closure, install the closure signs at least 7 days before closing the freeway. Notify the Engineer at least 5 business days before installing the signs. If the freeway is not closed on the posted day, change the closure to allow for a 3-business-day advance notice before closure.

Replace the paragraphs of section 12-4.02C(8)(b) with:

Replace section 12-4.02C(12) of the RSS for section 12 with:

12-4.02C(12) Construction Work Zone Speed Limit Reduction

12-4.02C(12)(a) General

Section 12-4.02C(12) includes specifications for providing, installing, maintaining, and removing traffic control devices for reducing the speed limit for the construction work zones.

Speed limit reduction is limited to 10 mph from the posted speed limit in construction work zones unless a greater speed limit reduction is specified. Construction work zone speed limit reduction can either be required when construction activities are active in a closure as a temporary condition or 24 hours a day, 7 days a week based on the roadway conditions when specified.

Speed limit reduction for Route 60 is to be reduced from 65 mph to 55 mph. Place traffic control devices as shown for multiple speed limit reduction steps within traffic control system. Speed limits can be stepped down in 5 or 10 mph increments.

Temporary construction work zone speed limit reduction is required for lane closures when construction activities require workers to be present within the lane closures. Construction work zone speed limit reduction is not required for short duration closures of 1 hour or less or when the length of lane closure is 1/2 mile or less.

Temporary construction work zone speed limit reduction is required when construction activities require lane closures for the locations shown in the following table:

Lane requirement chart no.
G1
G2

Construction work zone speed limit reduction is required 24 hours a day, 7 days a week when construction activities affect the roadway around the clock 24 hours a day, 7 days a week as shown on the traffic handling plans.

Construction work zone speed limit reduction is required 24 hours a day 7 days a week at the following locations when the roadway conditions listed are in effect because of construction activities:

Construction Work Zone Speed Limit Reduction 24 Hours A Day 7 Days A Week

Location no.	Route	Begin postmile/station	End postmile/station	Roadway condition
1	60	18.8/987+42	19.6/1034+27	Reduction in lane width. Temporary barrier adjacent to traffic with no shoulders.

For divided highways, the construction speed limit reduction zone for 24 hours a day, 7 days a week applies only to the direction of travel where the roadway conditions require lower vehicle speeds.

12-4.02C(12)(b) Materials

For construction work zone speed limit reduction for 24 hours a day, 7 days a week, construction area signs must comply with the requirements for stationary-mounted signs in section 12-3.11. When the duration of construction work zone speed limit reduction for 24 hours a day, 7 days a week is 7 days or less, you may use portable signs that comply with the requirements for portable signs in section 12-3.11.

For temporary construction work zone speed limit reduction, signs must comply with the requirements for portable signs in section 12-3.11.

The PCMS must comply with section 12-3.32.

Radar feedback sign LED displays must have LED:

1. Character of at least 18 inches in height for freeways and expressways
2. Character of at least 14 inches in height for conventional highways
3. Character's width-to-height ratio from 0.7 to 1.0
4. Character's stroke width-to-height ratio of 0.2

Portable radar speed feedback sign must comply with section 12-3.37.

Portable radar speed feedback sign trailers must have a minimum of 9 cones placed on a taper in advance of the device and along the edge of shoulder or edge of the traveled way at 25-foot intervals to a point not less than 25 feet past the device.

Temporary radar speed feedback sign system must comply with the specifications for:

1. Temporary electrical system in section 87-20
2. Radar speed feedback sign system in section 87-14 except the LED character display must remain blank when no vehicles are detected or when the detected vehicle speed is 10 miles or less than the pre-set speed

12-4.02C(12)(c) Construction

Advise motorists of construction work zone speed limit reductions starting 14 days in advance of implementing the speed limit reduction using a PCMS displaying the alternating messages *Reduced Speed* and *Starting XX/XX/XX (Date).*

When construction work zone speed limit reduction is in effect, the PCMS message must be *XX ZONE AHEAD* and *WILL BE ENFORCED*. Mount a 48-by-48-inch W3-5 XX "SPEED LIMIT" ahead symbol sign on the PCMS trailer.

Cover all existing speed limit signs while the construction work zone speed limit reduction is in effect. Remove covers when construction work zone speed limit reduction is no longer in effect. For construction work zone speed limit reduction for 24 hours a day, 7 days a week, you may remove the existing speed

limit signs and replace the signs when the construction activities that required the 24 hours a day, 7 days a week speed limit reduction are completed.

For construction work zone speed limit reduction for 24 hours a day, 7 days a week, install temporary radar speed feedback systems. In addition to the temporary radar speed feedback system shown, place a portable radar speed feedback system 400 feet upstream of active work areas. Portable radar speed feedback system must include a R2-1 sign with G20-5aP "WORK ZONE" plaque.

For temporary construction work zone speed limit reduction for lane closures, install portable radar speed feedback system as shown. In addition to the portable radar speed feedback system shown, place a portable radar speed feedback system 400 feet upstream of active work areas. The portable radar speed feedback system must include a R2-1 sign with G20-5aP "WORK ZONE" plaque.

For on-ramps within the limits of a construction work zone speed limit reduction, place R2-1 signs with G20-5aP "WORK ZONE" plaque within 500 feet of entrance ramps. You may use the strap and saddle method for mounting these sign panels on the entrance ramp lighting standard at the merge point.

Within the limits of a construction work zone speed limit reduction, place intermediate R2-1 signs with G20-5aP "WORK ZONE" plaque at intervals not exceeding three miles.

12-4.02C(12)(d) Payment

For construction work zone speed limit reduction for 24 hours a day, 7 days a week, signs are paid for as construction area signs, PCMS is paid for as portable changeable message sign, temporary radar speed feedback sign is paid for as temporary radar speed feedback sign system, and portable radar speed feedback sign is paid for as portable radar speed feedback sign systems. Covering and removing covers of existing speed limit signs are included in the price paid for construction area signs.

Replace *Reserved* in section 12-4.03C(1) of the RSS for section 12-4.03 with:

At each location where falsework is constructed over a street or route provide openings through the bridge falsework. The Engineer determines the exact location of the openings. The type, minimum width, height, and number of openings at each location, and the location and maximum spacing of the falsework lighting if required for each opening, must comply with the requirements shown in the following table:

Moreno Beach Blvd OC (Br No. 56-0845)
Eastbound Traffic

	Number	Width (feet)	Height (feet)
Vehicle openings[b]	1	38	15
Pedestrian openings	N/A	N/A	N/A

	Location	Spacing[a] (feet)
Falsework pavement lighting	R and L	30

NOTE:
R = Right side of traffic
L = Left side of traffic
C = Centered overhead
[a]Spacing is the maximum distance from center to center between fixtures.
[b]Width of vehicular openings is the clear width between temporary railings or other protective work.

Moreno Beach Blvd OC (Br No. 56-0845)
Westbound Traffic

	Number	Width (feet)	Height (feet)
Vehicle openings[b]	2	Mainline: 38 Ramp: 13	15
Pedestrian openings	N/A	N/A	N/A

	Location	Spacing[a] (feet)
Falsework pavement lighting	Mainline: R and L Ramp: R	Mainline: 30 Ramp: 30

NOTE:
R = Right side of traffic
L = Left side of traffic
C = Centered overhead
[a]Spacing is the maximum distance from center to center between fixtures.
[b]Width of vehicular openings is the clear width between temporary railings or other protective work.

^^

13 WATER POLLUTION CONTROL

Add to the end of section 13-3.01A:

This project's risk level is 2.

Add between the 4th and 5th paragraphs of section 13-3.01C(2)(a):

The following RWQCBs will review the authorized SWPPP:

1. Santa Ana Regional Water Quality Control Board

^^

14 ENVIRONMENTAL STEWARDSHIP

Add to the end of section 14-1.02:

An ESA exists on this project.

Before starting job site activities, install Temporary High Visibility Fence to protect the ESA and mark its boundaries.

Install signs 100 feet apart along the length and at the ends of ESA-1 and ESA-2 identifying the area as an ESA. Place the top of each sign flush with the top of Temporary High Visibility Fence.

The signs must:

1. Be weatherproof and fade-proof
2. Be from 8-1/2 to 11 inches high and from 11 to 14 inches wide

3. Have the following message in black letters: Environmentally Sensitive Area (ESA) – Do Not Enter.

The message must be legible from a distance of 20 feet by persons with 20/20 vision or vision corrected to 20/20.

The signs may be made of laminated printed paper attached to an inflexible weatherproof backer board.

Attach the signs to the Temporary High Visibility Fence with tie wire or locking plastic fasteners.

Maintain the signs until Contract acceptance.

Limited access to the ESA is allowed for installation of ESA Fencing. Notify the Engineer 14 business days or less before the planned entry date. Any other access to the ESA is prohibited.

More than one ESA exists on the job site. Use the management measures for the corresponding ESA shown in the following table:

ESA Management

Identification	Location	Management measures
ESA-1	Wash near new ramp. Station numbers See layout sheet L-3, between stations 1013 + and 1015 +	Notify the Engineer at least 14 days prior to construction activities to schedule the marking of the exact boundaries of the ESA fence. A biologist must be present during the installation of the project boundary and high visibility fence.
ESA-2	Wash near Pettit Street. Station numbers See layout sheet L-5, between Stations 1021+00 to 1023+00.	Notify the Engineer at least 14 days prior to construction activities to schedule the marking of the exact boundaries of the ESA fence. A biologist must be present during the installation of the project boundary and high visibility fence.

ESA signs must:

1. Be weatherproof and fade-proof
2. Be from 8-1/2 to 11 inches high and from 11 to 14 inches wide
3. Have a message that is legible from a distance of 20 feet by persons with 20/20 vision or vision corrected to 20/20
4. Be attached to the ESA barrier with tie wire or locking plastic fasteners

The signs may be made of laminated printed paper attached to an inflexible weatherproof backer board.

Access to an ESA other than that described is prohibited.

Add to the 1st paragraph of section 14-6.03A:

This project is within or near habitat for the regulated species shown in the following table:

Regulated Species

Nongame and Migratory Birds
Burrowing Owl
American Badger
Roosting Bats

This project includes the sensitive habitats shown in the following table:

Sensitive Habitats

Waters of the United States and Waters of the State (drainages and surrounding habitat)

Replace item 1 in the 2nd paragraph of section 14-6.03A with:

1. Stop all work within a 300-foot radius of the discovery except as shown in the following table:

Regulated species	Protective radius (feet)

Add to section 14-6.03A:

Species protection areas within the project limits are as specified in the following table:

Species Protection Areas

Identification name	Location
Species Protection Area 1 (SPA 1)	Entire Project Limits

Use the protocols for the corresponding regulated species shown in the following table:

Regulated species name	Protocol
Nongame and Migratory Birds and Roosting Bats	(SPA 1) Pre-construction nesting bird and roosting batsurveys shall be performed prior to the start of construction. During construction the Contractor-Supplied Biologist shall perform weekly checks for potential nesting throughout the duration of the project, and develop exclusionary buffers as appropriate.
Burrowing Owl and American Badger	(SPA 1) 30 days prior to clearing and grubbing a preconstruction survey shall be performed for Burrowing Owl in accordance with the *MSHCP Burrowing Owl Survey Instructions for the Western Riverside Multiple Species Habitat Conservation Plan Area*. Preconstruction surveys for American Badger shall be conducted concurrently with Burrowing Owl surveys. All active burrows and burrow complexes shall be examined and evaluated for the presence of Burrowing Owl and/or American Badger. If it is determined that Burrowing Owl or American Badger are present on-site the CDFW and RCA shall be contacted by the Biologist to determine appropriate avoidance or translocations methods.

Comply with the following biological resource information requirements:

1. Follow additional mitigation measures outlined in Biological Reports including the Natural Environment Study (NES) and DBESP (Determination of Biologically Equivalent or Superior Preservation).
2. Follow additional mitigation measures outlined in CWA 401 Water Quality Certification Permit when working near drainages or adjacent areas.
3. Follow additional mitigation measures outlined in Streambed Alteration Agreement (Fish and Game Code, 1602 Permit) when working near drainages or adjacent areas.
4. Follow measures provided in CWA 404 Nationwide Permit.

Within SPA-1, implement the following protection measures:

1. No impacts are permitted outside of the project limits, including overland travel.
2. Avoid accessing project site via Pettit Street (east side of project), to avoid impacts to ESA-2 (jurisdictional waterway).
3. Notify Contractor-Supplied Biologist if any nesting birds and roosting bats are discovered within work area, or immediately adjacent to work area. Contractor-Supplied Biologist shall set up exclusionary buffers as needed after monitoring for potential bird nesting or bat roosting activity.

Monitor regulated species according to the schedule shown in the following table:

Monitoring type	Schedule
Nongame and Migratory Birds, Burrowing Owl, American Badger, Roosting Bats	One day per week throughout construction
Exclusion fence integrity inspections, and biological mitigation measure compliance	One day per week throughout construction

Replace the 2nd paragraph of section 14-6.03B with:

The Department anticipates nesting or attempted nesting by migratory and nongame birds from February 1st to September 15th.

Replace item 1 in the list in the 6th paragraph of section 14-6.03B with:

1. Stop all work within a 300-foot radius of the discovery of any nesting nongame or migratory bird species.

Replace the list in the 2nd paragraph of section 14-6.03D(1) with:

1. Caltrans shall receive the resumes of one or more Biologist(s) within 45 days prior to construction start date. The Contractor/City shall allow 10 days for Caltrans to review resumes and approve Biologist(s).
2. Contractor-Supplied Biologist shall perform pre-construction survey for nesting non-game and migratory birds and roosting bats no more than one week prior to construction.
3. Contractor-Supplied Biologist shall perform pre-construction survey for Burrowing Owl and American Badger no more than 30 days prior to construction.
4. High visibility fence shall be installed at the boundary of ESAs adjacent to the project area. ESAs are outlined on layout pages L-3 and L-5 and correspond to drainages and surrounding areas. Biologist shall monitor installation of ESA fencing, as well as installation of fencing at project limits adjacent to ESA locations.
5. Contractor-Supplied Biologist shall visit site once per week in order to evaluate fence integrity and ensure biological commitments outlined in PLACs are met. Contractor-Supplied Biologist shall also monitor for general mitigation measures that concern biological resources. The Contractor-Supplied Biologist will notify Caltrans if any repairs are needed to the high visibility ESA fence. The Biologist shall notify the City and Caltrans within 24 hours if project activities are observed that are out of compliance.
6. Shielded lighting will be used for any nighttime construction adjacent to vegetated drainages to avoid and minimize artificial night lighting effects.

Replace the list in the 3rd paragraph of section 14-6.03D(1) with:

1. Contractor-Supplied Biologist shall submit a Preconstruction Survey Report to Caltrans detailing results of preconstruction surveys for roosting bats, nesting birds, Burrowing Owl, and American Badger.
2. Contractor-Supplied Biologist shall submit weekly reports summarizing project compliance concerning biological resources to Caltrans for review, including photographs, and descriptions of non-compliances if observed.

Add to section 14-6.03D(1):

A Contractor-supplied biologist who performs specialized activities must have demonstrated field experience working with the regulated species or performing the specialized task. The biologist must have experience that complies with the requirements shown in the following table:

Specialized activity/species	Requirements
Preconstruction Non-game Migratory Bird Nesting and Roosting Bat Surveys	Ability to identify nesting birds and roosting bats, as evidenced by experience monitoring 2 more projects of similar complexity.
Preconstruction Burrowing Owl and American Badger Survey	Ability to identify Burrowing Owl and American Badger, as evidenced by experience monitoring 2 more projects of similar complexity.
Biological Construction Monitoring and Fence Integrity Checks	Ability to perform construction monitoring, as evidenced by experience monitoring 2 more projects of similar complexity.

Within 45 days before starting job site activities, submit protocols for species protection surveys. Use protocols required in the PLACs.

Survey the job site for regulated species and submit a preconstruction survey report within 5 days before starting work.

The preconstruction survey report must include one of the following:

1. Detailed observations and locations where regulated species were observed
2. Statement that no regulated species were observed

Submit an initial monitoring report as an informational submittal within 48 hours after starting ground-disturbing activities.

Submit monitoring reports according to the following schedule:

Monitoring type	Report schedule
Preconstruction Non-game Migratory Bird Nesting and Bat Roosting Surveys.	Within 48 hours of completing survey
Preconstruction Burrowing Owl and American Badger Survey	Within 48 hours of completing survey
Biological Construction Monitoring and Fence Integrity Checks	Once per week

Submit a biological resource incident report within 24 hours of the incident.

The incident report must include:

1. Description of any take of regulated species or any violation of a biological resource PLAC
2. Species name and number taken
3. Details of required notifications with contact information
4. Corrective actions proposed or taken
5. Disposition of taken species

Submit an annual monitoring report no later than February 1st during each year of construction.

The annual monitoring report must include:

1. Start and end dates of construction
2. Project impacts on the regulated species
3. Species protection measures and implementation details
4. Incidental take details, including species name, number taken, people contacted, contact information, and disposition of taken species
5. Assessment of the effectiveness of the species protection measures in mitigating project impacts
6. Recommendations for improving species protection measures

Submit a final monitoring report no later than 30 days after completion of the project. If the report requires revisions, the Department provides comments. Submit a revised report within 7 days of receiving comments. The final monitoring report must be a cumulative report including:

1. Start and end dates of construction
2. Project impacts on the regulated species
3. Species protection measures and implementation details
4. Incidental take details, including species name, number taken, people contacted, contact information, and disposition of taken species
5. Assessment of the effectiveness of the species protection measures in mitigating project impacts
6. Recommendations for improving species protection measures

Replace *RESERVED* in section 14-6.05 with:

14-6.05 INVASIVE SPECIES CONTROL

Section 14-6.05 includes specifications for preventing the introduction and spread of invasive species to and from the job site.

Comply with section 13-4.03E(3).

At least 2 business days before using vehicles and equipment on the job site, submit a signed statement that the vehicles and equipment have been cleaned of soil, seeds, vegetative matter, and other such debris that may introduce or spread invasive species. The statement must include:

1. List of the vehicles and equipment with identifying numbers
2. Date of cleaning for each vehicle and piece of equipment
3. Description of the cleaning process
4. Measures to be taken to ensure the vehicles and equipment remain clean until operation at the job site

Clean the following vehicles and equipment before operation at the job site:

1. Excavators
2. Loaders
3. Graders
4. Haul trucks
5. Water trucks
6. Cranes
7. Tractors
8. Trailers
9. Dump trucks
10. Waders

This project includes the sensitive areas shown in the following table:

Sensitive Habitat

Waters of the United States and State (drainages and surrounding areas)

Do not clean vehicles, equipment, or tools at locations near sensitive habitat or waterways at the job site. Clean vehicles and equipment every time before it enters or leaves a sensitive habitat. Within SPA-1, implement the following protection measures:

1. Before entering or exiting, pressure wash your vehicles and equipment:
   1.1. At a temperature of 140 degrees F
   1.2. With a minimum nozzle pressure of 2,500 psi
   1.3. With a minimum fan tip angle of 45 degrees
2. Thoroughly scrub personal work equipment and tools, such as boots, waders, hand tools, and any other equipment used in water at the job site, using a stiff-bristled brush to remove any organisms. Decontaminate the equipment by one of the following methods:
   2.1. Immerse the equipment in water at a temperature of 140 degrees F for at least 5 minutes. If necessary, weigh down the equipment to keep it immersed in the water.
   2.2 Freeze the equipment to a temperature of 32 degrees F or colder for at least 8 hours.
   2.3 Thoroughly dry the equipment in a weed-free area for at least 48 hours.
3. Clean personal work equipment, and tools over drip pans or containment mats at the job site. Collect and contain the wastewater. Dispose of the wastewater at a waste management facility.

Replace the 2nd paragraph of section 14-8.02 with:

Noise from job site activities must not exceed 86 dBA Lmax at 50 feet from the job site from 8 p.m. to 7 a.m., except the following activities may exceed this noise restriction during the hours and on the days shown in the following table:

Noise Restriction Exceptions

Activity	Hours		Days	
	From	To	From	Through
Bridge Demolition	10 p.m.	5 a.m.	Monday	Thursday
Bridge Demolition	11 p.m.	5 a.m.	Friday	
Bridge Demolition	10 p.m.	7 a.m.	Saturday	Sunday

Add to section 14-8.02:

Furnish 1 Type 1 sound-level meter and 1 acoustic calibrator for the Department to use until Contract acceptance to monitor noise.

The sound-level meter must:

1. Be calibrated and certified by the manufacturer or an independent acoustical laboratory before delivery to the Department
2. Be capable of taking measurements using the A-weighting network and the slow-response settings
3. Have a microphone fitted with a windscreen
4. Be recalibrated annually by the manufacturer or an independent acoustical laboratory

Provide training in noise monitoring to 1 Department employee designated by the Engineer. The person delivering the training must be trained in noise monitoring.

The Department returns the equipment to you at Contract acceptance.

Add to the end of section 14-9.02:

The US EPA has established the National Emission Standards for Hazardous Air Pollutants (NESHAP). Under the Health & Safety Code § 39658(b)(1), your demolition and rehabilitation activities must comply with 40 CFR 61, Subpart M (National Emission Standard for Asbestos).

You must notify the South Coast Air Quality Management District (SCAQMD) of your demolition activities even if the activities will not disturb asbestos-containing material.

You must process the notification form, submittal instructions, and other information from:

SCAQMD
21865 Copley Dr.
Diamond Bar, CA 91765
http://www.aqmd.gov/

Instead of the 10 working days specified at the website, submit a notification form to the SCAQMD at least 15 days before starting demolition or rehabilitation activities.

Submit a copy of the notification form and the necessary attachments as informational submittals before starting demolition or rehabilitation activities.

If you discover unanticipated asbestos-containing material during the demolition or rehabilitation activities, immediately stop work in that area and notify the Engineer. The Department will use other forces to remove and dispose of the material. Do not resume work in the area until authorized

Notify the SCAQMD of a change to your demolition or rehabilitation activities, including a revised work plan or the discovery of unanticipated asbestos-containing materials, within 2 days of the change or discovery.

Add after the 2nd paragraph of section 14-11.12A:

This project includes removal of yellow traffic stripe and pavement markings that will produce hazardous waste residue.

Add after the 1st paragraph of 14-11.12E:

After the Engineer accepts the analytical test results, dispose of yellow thermoplastic and yellow paint hazardous waste residue at a Class 1 disposal facility located in California within 90 days after the start of accumulating 220 lb of residue.

If less than 220 lb of hazardous waste residue and dust is generated in total, dispose of it within 90 days after the start of accumulation of the residue.

Add to the 1st paragraph of section 14-11.14A:

Wood removed from guardrail and sign posts is treated wood waste.

Replace section 14-11.16 with:

14–11.16 ASBESTOS-CONTAINING CONSTRUCTION MATERIALS IN BRIDGES

14-11.16A General

Section 14-11.16 includes specifications for surveying, sampling, and analysis of asbestos-containing construction material (ACCM) in bridges. Surveying, sampling, and analysis of ACCM is the first order of work. The Department removes and disposes of identified asbestos, requiring removal for the bridge demolition to proceed, through the use of other forces.

Survey the following bridge for ACCM:

1. Moreno Beach Drive OC, bridge number 56-0486.

Thorough inspection of the bridge, including concrete, joint seals, joint seal mastics, bridge railing shims, premolded expansion joint filler, bearing pads, piping and other suspect material is required under 40 CFR. §61.145(a) before demolition. The person in charge of the asbestos survey and sampling must be a Certified Asbestos Consultant (CAC). A CAC must be registered under Labor Code § 6501.5 and certified under Bus & Prof Code § 7058.6.

Sampling and analysis must comply with US EPA's “Asbestos/NESHAP Regulated Asbestos Containing Materials Guidance” and the South Coast Air Quality Management District (SCAQMD) Rule 1403. The laboratory that performs the asbestos analyses must be certified by the SWRCB ELAP for all analyses to be performed.

Notify the SCAQMD of changes in work locations or conditions such as changes to demolition plans, including discovery of unanticipated asbestos during demolition within 2 days of the change.

14-11.16B Definitions

asbestos: Any of several minerals that readily separate into long flexible fibers. Includes chrysotile, amosite, crocidolite, tremolite, anthrophyllite, actinolite, and any of these minerals that has been chemically treated, altered, or both.

asbestos-containing construction materials (ACCM): Manufactured construction material which contains more than 1/10th of 1 percent asbestos by weight, under 8 CA Code of Regs § 341.6.

asbestos-containing material (ACM): Building material, including asbestos cement pipe and concrete, containing commercial asbestos in an amount more than 1 percent asbestos by weight, area, or count under 40 CFR § 61.145.

certified asbestos consultant: Asbestos consultant certified by Cal/OSHA under 8 CA Code of Regs §§ 341.15 and 1529. A certified asbestos consultant must be registered or working for a company registered under Labor Code § 6501.5 and certified under Bus & Prof Code § 7058.6.

friable ACM: Material containing more than 1 percent asbestos, as determined by polarized light microscopy, that can be crumbled, pulverized, or reduced to powder by hand pressure when dry under 22 CCR § 66261.24.

nonfriable ACM: Material containing more than 1 percent asbestos by area with asbestos fibers that:

1. Are tightly bound into the matrix of the material
2. Should not become an airborne hazard as long as the material remains intact and undamaged and is not sawed, sanded, drilled, or otherwise abraded during removal

regulated asbestos-containing material (RACM): Under 40 CFR § 61.141, RACM is defined as any of the following:

1. Friable ACM
2. Category I nonfriable ACM that has become friable or will be or has been subjected to sanding, grinding, cutting, or abrading
3. Category II nonfriable ACM that may become, has become, or has a high probability of becoming friable

14-11.16C Submittals

14-11.16C(1) General

Not used

14-11.16C(2) Asbestos Survey and Sampling Work Plan

Submit a work plan for asbestos surveying, sampling, and analysis before starting bridge removal . The plan must be prepared and signed by a CAC and include:

1. Asbestos sampling procedures, complying with US EPA, SW-846, "Test Methods for Evaluating Solid Waste," Volume II: Field Manual, Physical/Chemical, Chapter 9
2. Method for analyzing samples under 40 CFR 763 Subpart F, appendix A, Polarized Light Microscopy, Analytical Method 600/R-93-116
3. Collection of all information and data required by SCAQMD Rule 1403

4. Name and address of the laboratory that will perform the asbestos analyses and a copy of the laboratory's SWRCB ELAP certification including fields of testing it is certified to perform
5. Procedures for handling and preserving samples
6. Procedures for recording sample locations
7. Safety measures including:
   - 7.1 Identification of personnel who will survey and sample areas suspected to contain asbestos, their roles and responsibilities, and a copy of licenses and certifications
   - 7.2 Description of hazards that will be encountered
   - 7.3 Description of personal protective equipment
   - 7.4 Description of safe survey and sampling practices for protection of survey personnel and others present at the job site
   - 7.5 Description of decontamination procedures
   - 7.6 Certification of completed safety training for personnel who will survey and sample areas suspected to contain asbestos
   - 7.7 Contingency or emergency procedures

14-11.16C(3) Asbestos Survey and Sampling Report

Submit a sampling and analysis report within 10 days of sampling. The report must be prepared and signed by a CAC and include:

1. Sampling protocols
2. Analytical methods used
3. Photographs of the structures and of the locations where samples were taken
4. Presence of and percent asbestos in ACCM
5. Classification of the ACM as friable or nonfriable
6. Quantification of ACM
7. Recommendations for the removal and disposal of confirmed ACM
8. Documentation of the chain of custody
9. Laboratory test data, name and address of laboratory, ELAP certification, and fields of testing
10. Figures showing location where samples were collected and areas with identified ACM
11. Description of all areas of bridge and types of ACCM sampled and field photographs of the sample locations
12. Equipment used to collect samples
13. Name, address, and telephone number of the CAC who conducted the survey, written statement of qualifications and certification for EPA-approved Building Inspector Course.
14. Dates survey was conducted
15. Field notes
16. Field and Laboratory QA/QC procedures

Allow 20 days for review. Submit a revised sampling and analysis report within 5 business days of receiving the Department's comments. Submit 2 copies of the final report with wet signature and seal of the CAC.

14-11.16D Asbestos Survey

Perform surveying, sampling, and analysis under the authorized work plan.

Collect a minimum of 3 samples from each part of the bridge where ACCM is suspected to be present, including concrete, joint seals, joint seal mastics, bridge railing shims, premolded expansion joint filler, bearing pads, and piping . For pipes and other linear parts, collect enough samples to determine the suspected asbestos content of the material.

Collect samples of:

1. Exposed suspected ACCM on the structure including bridge components listed above.
2. Bridge concrete. Identify concrete samples by:
   - 2.1. Concrete color
   - 2.2. Concrete texture
   - 2.3. Type of structure component to be impacted

Transport samples under chain of custody to the authorized laboratory within 24 hours of sampling. The laboratory must test the samples within 48 hours of receiving them.

14-11.16E ACM Identified in the Asbestos Survey and Sampling Report

The Department removes any ACM requiring removal for work to proceed identified in the authorized sampling and analysis report. Do not begin bridge removal until:

1. The Department authorizes the Asbestos Survey and Sampling Report
2. The Engineer notifies you that identified ACM has been removed from the job site or planned removal has been incorporated into the schedule

14-11.16F Discovery of Unanticipated Asbestos

If you discover asbestos during demolition, not identified by your asbestos survey, stop work in that area and notify the Engineer.

^^

15 EXISTING FACILITIES

Add to the end of the 1st paragraph of section 15-1.03B:

except for post sleeve. Remove this concrete to a depth of 7 feet below finished grade.

Add to the end of section 15-1.03C:

At least 2 business days before hauling the material to the salvaged material stockpile location, notify the Engineer.

The stockpile locations are as shown in the following table:

Stockpile Locations

Material	Location
Traffic Signal Equipment	District 8 Warehouse 175 West Cluster Street San Bernardino, CA 92408
Irrigation Controller, Equipment, and Yagi Antennas	District 8 Warehouse 175 West Cluster Street San Bernardino, CA 92408
Drainage Facilities (Timber Bulkheads)	District 8 Warehouse 175 West Cluster Street San Bernardino, CA 92408
Metal Beam Guardrail Railing (EB Ramps)	Moreno Valley City Yard 15670 Perris Boulevard Moreno Valley, CA 92388
Handrailing (EB On-Ramp)	Moreno Valley City Yard 15670 Perris Boulevard Moreno Valley, CA 92388
Bridge rail (Moreno Beach Drive OC)	Moreno Valley City Yard 15670 Perris Boulevard Moreno Valley, CA 92388

^^

DIVISION III EARTHWORK AND LANDSCAPE

19 EARTHWORK

Add to section 19-6.03D:

Settlement periods and surcharges are required for bridge approach embankments as shown in the following table:

Bridge name or number	Abutment number	Bent number	Surcharge height (feet)	Settlement period (days)
56-0845	1 and 3	N/A	0.0[a]	14

[a]At this location, construct embankment by extending the grading plane (GP) in the elevation view of the bridge embankment surcharge detail of standard plan A62B horizontally to the centerline of the abutment.

Add to section 19-7.02C:

Imported borrow placed within 4 feet of the finished grade must have an R-value of at least 40.

Process the imported borrow to comply with the grading requirements.

Strip materials that adversely affect the imported borrow properties.

^^

20 LANDSCAPE

Add to section 20-1.02C:

Select herbicides from the following table:

Herbicides

Herbicide name	Herbicide type					
	Preemergent (granular)	Preemergent (non granular)	Post-emergent	Selective	Non-selective	Systemic
Aminocyclopyrachlor	--	X	--	--	X	X
Aminopyralid	--	--	--	X	--	--
Chlorsulfuron	--	--	--	X	--	--
Clopyralid	--	--	--	--	X	--
Diquat dibromide	--	--	--	--	X	--
Dithiopyr	--	X	--	--	--	--
Fluazifop-P-Butyl	--	--	--	X	--	--
Glyphosate	--	--	X	--	--	X
Imazapyr	--	--	--	--	X	--
Indaziflam	--	X	--	--	X	X
Isoxaben	--	X	--	--	--	--
Oryzalin	--	X	--	--	--	--
Oxadiazon	X	X	--	--	--	X
Oxyfluorfen	--	X	X	--	--	--
Pendimethalin	X	X	X	--	--	--
Rimsulfuron	--	--	--	X	--	--
Sethoxydim	--	--	X	X	--	--
Sulfentrazone	--	--	--	--	X	--
Sulfometuron-methyl	--	--	--	--	X	--
Sulfosulfuron	--	--	--	--	X	--
Triclopyr	--	--	--	--	--	X

Replace the 3rd paragraph of section 20-2.01A(4)(b)(i) with:

Perform pressure testing using Method B to test supply lines (1) completely visible after installation.

Add to the 1st paragraph of section 20-2.01B(7):

Valve boxes must not have side openings.

Add to the list in the 2nd paragraph of section 20-2.01B(7):

4. Secured using a commercial-quality locking mechanism.

Replace section 20-1.01D(3) of the RSS for section 20-1.01D with:

20-1.01D(3) Soil Testing

Provide an agronomic soil test from a laboratory that uses methods of soil analysis approved by the American Society of Agronomy and the Soil Science Society of America.

Collect soil samples from at least 10 different locations at a depth from 8 to 14 inches from the surface.

Use sample locations that best represent areas that will be used for planting and seeding work. Sample locations must be authorized. Collect testing samples after the finished grade is achieved.

Test Results must include the following:

Test Element	Method
pH	Methods of Soil Analysis, Part 3 Chemical Methods, Soil Science Society of America, Inc., 1996 Chapter 16 or USDA Agricultural handbook No. 60, Diagnosis and Improvement of Saline and Alkali Soils, Method 21a
Saturation Extract	Methods of Soil Analysis, Part 3 Chemical Methods, Soil Science Society of America, Inc., 1996 Chapter 14 or USDA Agricultural handbook No. 60, Diagnosis and Improvement of Saline and Alkali Soils, Method 2
Sodium Adsorption Ratio	Methods of Soil Analysis, Part 3 chemical Methods, Soil Science Society of America, Inc., 1996 Chapter 14 or Inductively Coupled Argon Plasma Optical Emissions, EPA Method 6010B
Water Infiltration Rate	USDA Agricultural handbook No. 60, Diagnosis and Improvement of Saline and Alkali Soils, Method 34B
Base Saturation	Methods of Soil Analysis, Part 3 Chemical Methods, Soil Science Society of America, Inc., 1996 Chapter 40 or USDA Agricultural handbook No. 60, Diagnosis and Improvement of Saline and Alkali Soils, Method 18, 19 and 20
Exchangeable Ammonium cation	Methods of Soil Analysis, Part 3 Chemical Methods, Soil Science Society of America, Inc., 1996 Chapter 38
Cation Exchange Capacity	Methods of Soil Analysis, Part 3 Chemical Methods, Soil Science Society of America, Inc., 1996 Chapter 40 or USDA Agricultural handbook No. 60, Diagnosis and Improvement of Saline and Alkali Soils, Method 18, 19 and 20
Electrical Conductivity	Methods of Soil Analysis, Part 3 Chemical Methods, Soil Science Society of America, Inc., 1996 Chapter 14 or USDA Agricultural handbook No. 60, Diagnosis and Improvement of Saline and Alkali Soils, Method 2
Soil Texture	Methods of Soil analysis, Part 1, Physical and Mineralogical Methods, Soil Science Society of America, Inc.,1986, Chapter 15
Organic Content	Methods of Soil Analysis, Part 3 Chemical Methods, Soil Science Society of America, Inc., 1996 Chapter 37
Boron	Methods of Soil Analysis, Part 3 Chemical Methods, Soil Science Society of America, Inc., 1996 Chapter 38 or Inductively Coupled Argon Plasma Optical Emissions, EPA Method 6010B
Calcium	Methods of Soil Analysis, Part 3 Chemical Methods, Soil Science Society of America, Inc., 1996 Chapter 40 or USDA Agricultural handbook No. 60, Diagnosis and Improvement of Saline and Alkali Soils, Method 18, 19 and 20 or Inductively Coupled Argon Plasma Optical Emissions, EPA Method 6010B
Chloride	Methods of Soil Analysis, Part 3 chemical Methods, Soil Science Society of America, Inc., 1996 Chapter 14 or USDA Agricultural handbook No. 60, Diagnosis and Improvement of Saline and Alkali Soils, Method 2 or Inductively Coupled Argon Plasma Optical Emissions, EPA Method 6010B
Copper	Methods of Soil Analysis, Part 3 Chemical Methods, Soil Science Society of America, Inc., 1996 Chapter 26, Ammonium Bicarbonate-Diethylenetriaminepentaacetic Acid (AB-DTPA) Method
Iron	Methods of Soil Analysis, Part 3 Chemical Methods, Soil Science Society of America, Inc., 1996 Chapter 23, Ammonium Bicarbonate-Diethylenetriaminepentaacetic Acid (AB-DTPA) Method
Magnesium	Methods of Soil Analysis, Part 3 Chemical Methods, Soil Science Society of America, Inc., 1996 Chapter 20, Ammonium Bicarbonate-Diethylenetriaminepentaacetic Acid (AB-DTPA) Method
Calcium/Magnesium Carbonate	Methods of Soil Analysis, Part 3 Chemical Methods, Soil Science Society of America, Inc., 1996 Chapter 34
Manganese	Methods of Soil Analysis, Part 3 Chemical Methods, Soil Science Society of America, Inc., 1996 Chapter 24, Ammonium Bicarbonate-

	Diethylenetriaminepentaacetic Acid (AB-DTPA) Method
Molybdenum	Methods of Soil Analysis, Part 3 Chemical Methods, Soil Science Society of America, Inc., 1996 Chapter 27, Ammonium Bicarbonate-Diethylenetriaminepentaacetic Acid (AB-DTPA) Method
Nitrate	Methods of Soil Analysis, Part 3 Chemical Methods, Soil Science Society of America, Inc., 1996 Chapter 31, Ion Selective Electrodes (ISE), Method
Phosphorus	Methods of Soil Analysis, Part 3 Chemical Methods, Soil Science Society of America, Inc., 1996 Chapter 32, Ammonium Bicarbonate-Diethylenetriaminepentaacetic Acid (AB-DTPA) Method
Potassium	Methods of Soil Analysis, Part 3 Chemical Methods, Soil Science Society of America, Inc., 1996 Chapter 19, Ammonium Bicarbonate-Diethylenetriaminepentaacetic Acid (AB-DTPA) Method
Sodium	Methods of Soil Analysis, Part 3 Chemical Methods, Soil Science Society of America, Inc., 1996 Chapter 19, Ammonium Bicarbonate-Diethylenetriaminepentaacetic Acid (AB-DTPA) Method
Sulfate/Sulfur	Communication Soil Science Plant Analysis, Chapter 33, 2002 Ammonium Bicarbonate-Diethylenetriaminepentaacetic Acid (AB-DTPA) Method, Optimization of a Method for soil sulfur extraction,
Zinc	Methods of Soil Analysis, Part 3 Chemical Methods, Soil Science Society of America, Inc., 1996 Chapter 26, Ammonium Bicarbonate-Diethylenetriaminepentaacetic Acid (AB-DTPA) Method
Aluminum	Methods of Soil Analysis, Part 3 Chemical Methods, Soil Science Society of America, Inc., 1996 Chapters 25, 27, 28, 29, 30, Ammonium Bicarbonate-Diethylenetriaminepentaacetic Acid (AB-DTPA) Method
Selenium	Methods of Soil Analysis, Part 3 Chemical Methods, Soil Science Society of America, Inc., 1996 Chapters 25, 27, 28, 29, 30, Ammonium Bicarbonate-Diethylenetriaminepentaacetic Acid (AB-DTPA) Method

Test Results must also include the following:

Test Element	Method
Arsenic	Methods of Soil Analysis, Part 3 Chemical Methods, Soil Science Society of America, Inc., 1996 Chapters 25, 27, 28, 29, 30, Ammonium Bicarbonate-Diethylenetriaminepentaacetic Acid (AB-DTPA) Method
Cadmium	Methods of Soil Analysis, Part 3 Chemical Methods, Soil Science Society of America, Inc., 1996 Chapters 25, 27, 28, 29, 30, Ammonium Bicarbonate-Diethylenetriaminepentaacetic Acid (AB-DTPA) Method
Chromium	Methods of Soil Analysis, Part 3 Chemical Methods, Soil Science Society of America, Inc., 1996 Chapters 25, 27, 28, 29, 30, Ammonium Bicarbonate-Diethylenetriaminepentaacetic Acid (AB-DTPA) Method
Cobalt	Methods of Soil Analysis, Part 3 Chemical Methods, Soil Science Society of America, Inc., 1996 Chapters 25, 27, 28, 29, 30, Ammonium Bicarbonate-Diethylenetriaminepentaacetic Acid (AB-DTPA) Method
Lead	Methods of Soil Analysis, Part 3 Chemical Methods, Soil Science Society of America, Inc., 1996 Chapters 25, 27, 28, 29, 30, Ammonium Bicarbonate-Diethylenetriaminepentaacetic Acid (AB-DTPA) Method
Lithium	Methods of Soil Analysis, Part 3 Chemical Methods, Soil Science Society of America, Inc., 1996 Chapters 25, 27, 28, 29, 30, Ammonium Bicarbonate-Diethylenetriaminepentaacetic Acid (AB-DTPA) Method
Nickel	Methods of Soil Analysis, Part 3 Chemical Methods, Soil Science Society of America, Inc., 1996 Chapters 25, 27, 28, 29, 30, Ammonium Bicarbonate-Diethylenetriaminepentaacetic Acid (AB-DTPA) Method
Silver	Methods of Soil Analysis, Part 3 Chemical Methods, Soil Science Society of America, Inc., 1996 Chapters 25, 27, 28, 29, 30, Ammonium Bicarbonate-Diethylenetriaminepentaacetic Acid (AB-DTPA) Method
Strontium	Methods of Soil Analysis, Part 3 Chemical Methods, Soil Science Society of America, Inc., 1996 Chapters 25, 27, 28, 29, 30, Ammonium Bicarbonate-Diethylenetriaminepentaacetic Acid (AB-DTPA) Method
Tin	Methods of Soil Analysis, Part 3 Chemical Methods, Soil Science Society of America, Inc., 1996 Chapters 25, 27, 28, 29, 30, Ammonium Bicarbonate-Diethylenetriaminepentaacetic Acid (AB-DTPA) Method
Vanadium	Methods of Soil Analysis, Part 3 Chemical Methods, Soil Science Society of America, Inc., 1996 Chapters 25, 27, 28, 29, 30, Ammonium Bicarbonate-Diethylenetriaminepentaacetic Acid (AB-DTPA) Method

Laboratory interpretation data must cite low, medium, and high nutrient concentrations, nutritional deficiencies, excesses, and potential toxicities. Test results must include amendment recommendations for new and existing planting and seeding.

Submit test results and any recommended design modifications as a result of the test 15 days before any planting, seeding, or soil amendments activities.

Delete item 2 in the list in the 1st paragraph of section 20-2.02B(1).

Replace item 1 in the list in the 1st paragraph of section 20-2.02B(4) with:

1. Be hot-dipped galvanized steel

Add to the list in the 1st paragraph of section 20-2.02B(4):

7. Be powder coated by the manufacturer to match color no. 24052 (Green) of AMS-STD-595

Add to section 20-2.05B:

Flow sensor cable must be rated 600V and 194 degree F, be UL listed as Type TC, comply with specifications of ICEA/NEMA and:

1. Consist of 2 no. 14 minimum solid copper conductors. Insulated conductor must be color red and black coded with a PVC or nylon jacket.
2. Have an outside diameter of 0.20 to 0.25 inch.

3. Be UV resistant and direct burial type.
4. Have no splices between components except where shown.

Add to the list in the 1st paragraph of section 20-2.06B(2)(a):

Add after the 1st paragraph of section 20-2.06B(2)(a):

Before the irrigation system functional test begins, furnish 1 remote access devices.

Add to section 20-2.06B(2)(a):

The irrigation controllers within Department highway areas must be CALSENSE and must have 2-way communication using Ethernet modems connected to the district network for use via a Web Based application. The vendor must install any necessary software and conduct any initial software or proprietary website setup configuration for communications between controller and any web-enabled device.

You may obtain specified equipment listed below from:

Company: Calsense Corporation
Address: 2075 Corte Del Nogal Suite P. Carlsbad, CA 92011
Business phone number: 1-800-572-8608
Mobile phone number: 760-580-9428
Email address: Bobm@Calsense.com

The Department has obtained quoted prices, not including sales tax and delivery, for the equipment shown in the following table:

Equipment description	Quoted price (EA)	Quantity	Extended price	Controller and Remote Access Device identification
48-station base model CS3000 with wall-mount enclosure, support for a single conventionally-wired POC, transient protection, and field replaceable modules.	$4,724.00	2	$9,448.00	CS3-32-WM
Ethernet device for CS3000 to provide communication with cloud-based Command Center Online using a customer's existing Ethernet network	$625.00	1	$625.00	CS3-EN
AC line protection for CS3000 irrigation controllers	$205.00	2	$410.00	TP-110
1” brass tee-mounted Flow Meter (Sensor)	$595.00	1	$595.00	FM-1B
CS3000 Flowsense Option	$550.00	2	$1,100.00	CS3-FL
Spread Spectrum Radio to provide wireless communication between CS3000 controllers.	$1,595.00	2	$3,190.00	CS3-SR
Spread Spectrum radio directional high gain Yagi Antenna operating at 6-dBi.	$295.00	2	$590.00	SR-YAGI-6
Antenna cable surge protection device	$210.00	2	$420.00	ANT-PROT
40’ standard length antenna cable with end connectors	$232.00	2	$464.00	LMR-400-DB-40ft
4G LTE cellular modem for CS3000 to provide communication with cloud-based Command Center Online web application. Includes GR-STUBBY antenna.	$1,790.00	1	$1,790.00	CS3-GR-KIT
5-year prepaid data plan for 1 cellular modem communicating with 1 or 2 controllers.	$750.00	1	$750.00	COMM-5YR-2

These prices are good until 01/04/2021.

Add to section 20-2.06B(3):

A single irrigation controller enclosure cabinet must be 60 inches high by 36 inches wide by 12 inches deep.

Replace the 1st paragraph of section 20-2.10B(2) with:

Each ball valve must be PVC or chlorinated PVC and must comply with the requirements shown in the following table:

Quality characteristic	Requirement
Nonshock working pressure for 3/4 to 4 inch valves (min, psi)	235
Nonshock working pressure for 6 inch valves (min, psi)	150
Seats	PTFE
O-ring seals	EPDM or fluoroelastomer

Replace item 2.2 in the list in the 1st paragraph of section 20-2.10B(4) with:

2.2. Reusable cylindrical threaded plastic rings attached to one another to form a filter with a 140 mesh size filtration

Add to the list in 1st paragraph of section 20-2.10B(10)(a):

13. Not have external tubing.

Add to section 20-3.01A(3)(b):

Some plants required may not be readily available and must be grown specifically for this project. Submit a statement within 30 days after Contract approval from the vendor that the order to grow the plants, including inspection plants and replacement plants, has been received and accepted by the vendor. The statement from the vendor must include the plant names, sizes, and quantities and the anticipated delivery date. Notify the Engineer when the vendor has started growing the plants.

Add to section 20-3.01B(3)(a):

Soil amendment must be Nitrolized Fur Bark.

Add after section 20-3.01B(3)(a):

20-3.01B(3)(b) Iron Sulfate

Iron sulfate must be ferrous sulfate in pelleted or granular form containing not less than 18.5 percent iron expressed as metallic iron.

Add between the 2nd and 3rd paragraphs of section 20-4.01A:

Minimum-bid plant establishment work is work (1) that is described as plant establishment work and (2) for which a minimum item total must be bid.

Add to section 20-4.01A:

This project has a Type 2 plant establishment period.

Replace the 1st paragraph of section 20-4.01C(1) with:

Submit the following seasonal watering schedules for use during the plant establishment period:

1. March through May
2. June through August
3. September through October
4. November through February

Submit the first season's watering schedule within 10 days after the start of the plant establishment period. Submit subsequent watering schedules at least 5 days before start of the next seasonal period. Remote irrigation control system watering schedule must use the remote irrigation control system software program.

Add before the 1st paragraph of section 20-4.03A:

Maintain a neat and presentable job site during plant establishment including areas not visible to the public.

Add to section 20-4.03C:

Apply slow-release fertilizer to the plants during the 1st week of March of each year.

Add to section 20-4.03D:

Dispose of weeds under section 20-1.03C(4).

Add to section 20-4.03:

20-4.03H Pest Control

Control pests under sections 20-1.03B and 20-1.03C(1).

Replace *Reserved* in section 20-5.03E with:

20-5.03E Rock Mulch

20-5.03E(1) General

20-5.03E(1)(a) Summary

Section 20-5.03E includes specifications for placing rock mulch.

20-5.03E(1)(b) Definitions

Not Used

20-5.03E(1)(c) Submittals

Submit a 1 sq yd sample with rock of various sizes at least 5 business days before delivery to job site.

20-5.03E(1)(d) Quality Assurance

Not Used

20-5.03E(2) Materials

Do not use:

1. Filter Fabric

Rock mulch must be angular in form and uniform in color.

Rock mulch must be clean and obtained from a single source.

Rock that is exposed on the finished surface must be smooth, round, and without jagged edges or chipped areas showing.

20-5.03E(3) Construction

Excavation is not required.

After clearing, grade areas to receive rock mulch to a smooth, uniform surface, and compact to not less than 90 percent relative compaction. Place rock mulch on finished grade.

Place the rock such that no soil areas or filter fabric are exposed. You may use rock with superficial chipping or jagged edges if the rock is uniformly placed such that the chipped areas and jagged edges are not visible on the finished surface.

20-5.03E(4) Payment

The payment quantity for rock mulch is the area measured parallel to the surface of rock mulch.

^^

21 EROSION CONTROL

Add to section 21-2.02P:

Straw for fiber roll must be certified weed free under the Department of Food and Agriculture.

Replace section 21-2.02K with:

21-2.02K Compost

Compost must be derived from one or a combination of the following types of materials:

1. Green material consisting of chipped, shredded, or ground vegetation or clean, processed, recycled wood products
2. Biosolids
3. Manure
4. Mixed food waste

Compost must not be derived from mixed municipal solid waste and must not contain paint, petroleum products, pesticides, or other chemical residues harmful to plant or animal life. Metal concentrations in compost must not exceed the maximum listed under 14 CA Code of Regs § 17868.2.

Process compost materials under 14 CA Code of Regs § 17868.3.

The particle size must comply with the requirements shown in the following table:

Compost Gradation

Quality characteristic	Test method[a]	Requirement	
		Min	Max
Gradation Fine:(dry weight % passing)			
1-inch sieve	TMECC 02.02-B	100	--
3/8-inch sieve		95	--
Gradation Medium:(dry weight % passing)			
2-inch sieve	TMECC 02.02-B	95	--
3/8-inch sieve		40	55
Gradation Coarse:(dry weight % passing)			
3-inch sieve	TMECC 02.02-B	95	--
3/8-inch sieve		25	35

[a] TMECC refers to *Test Methods for the Examination of Composting and Compost*, published by the United States Department of Agriculture and the United States Compost Council (USCC).

The quality characteristics of compost must have the values shown in the following table:

Compost

Quality characteristic	Test method[a]	Requirement	
		Fine	Medium/Coarse
pH	TMECC 04.11-A	6–8.5	6-8.5
Soluble salts (dS/m)	TMECC 04.10-A	0–10	0-10
Moisture content (% wet weight)	TMECC 03.09-A	25–60	25-60
Organic matter content (% dry weight)	TMECC 05.07-A	30–70	30-100
Maturity (seed emergence) (% relative to positive control)	TMECC 05.05-A	80 or above	80 or above
Maturity (seedling vigor) (% relative to positive control)	TMECC 05.05-A	80 or above	80 or above
Stability (mg CO_2-C/g OM per day)	TMECC 05.08-B	5 or below	8 or below
Pathogen Salmonella (most probable number per 4 grams dry weight basis)	TMECC 07.01-B	< 3	< 3
Pathogen Fecal coliform (most probable number per gram dry weight basis)	TMECC 07.01-B	< 1,000	< 1,000
Physical contaminants (% dry weight) Plastic, glass, and metal	TMECC 02.02-C	combined total: < 0.5	combined total: < 1.0
Film plastic (% dry weight)	TMECC 02.02-C	Combined total: < 0.1	Combined total: < 0.1

[a] TMECC refers to *Test Methods for the Examination of Composting and Compost*, published by the United States Department of Agriculture and the United States Compost Council (USCC).

Add to section 21-2.02P:

Straw for fiber roll must be certified weed free under the Department of Food and Agriculture.

Replace section 21-3 with:

21-3 PERMANENT EROSION CONTROL ESTABLISHMENT WORK

21-3.01 GENERAL

21-3.01A Summary

Section 21-3 includes specifications for performing permanent erosion control establishment work.

Permanent erosion control establishment work consists of weekly inspections of the project site for deficiencies in erosion control features.

The permanent erosion control establishment period starts after permanent erosion control work has been completed.

The Engineer notifies you when the permanent erosion control establishment period starts and furnishes weekly statements regarding the number of working days credited to the permanent erosion control establishment period after the notification.

At the start of the permanent erosion control establishment period you may request relief from maintenance and protection for work items that are not associated with water pollution control and permanent erosion control establishment work.

Working days on which no work is required during the permanent erosion control establishment period are credited as permanent erosion control establishment working days, regardless of whether or not you performed permanent erosion control establishment work.

Working days on which you fail to adequately perform permanent erosion control establishment work as required are not credited as permanent erosion control establishment working days.

Working days that occur after you fail to meet a due date for a Permanent Erosion Control Establishment (PECE) Report submittal will not be credited as permanent erosion control establishment working days.

21-3.01B Definitions

Not Used

21-3.01C Submittals

Submit a Permanent Erosion Control Establishment (PECE) Report form as an informational submittal within 24 hours of completing a weekly inspection and within 24 hours of each qualifying rain event. The WPC manager is responsible for the preparation and submittal of the PECE report. The report must identify any deficiencies that require repair, adjustment, or reapplication of materials, including:

1. Slides
2. Slipouts
3. Surface erosion
4. Damage to:
   4.1. Erosion control devices
   4.2. Water pollution control devices
5. Poor seed germination
6. Poor plant growth
7. Dead or damaged erosion control plant material
8. Misaligned features
9. Required repair work

21-3.01D Quality Assurance

Perform a final inspection of the permanent erosion control establishment work in the presence of the Engineer 20 to 30 days before the anticipated contract acceptance date provided by the Engineer.

21-3.02 MATERIALS

Not Used

21-3.03 CONSTRUCTION

Perform work ordered from the PECE report. This work is change order work.

21-3.04 PAYMENT

Not Used

^^

DIVISION V SURFACINGS AND PAVEMENTS

36 GENERAL

Replace section 36-3 with:

08-15-19

36-3 PAVEMENT SMOOTHNESS

36-3.01 GENERAL

36-3.01A Summary

Section 36-3 includes specifications for measuring the smoothness of pavement surfaces.

36-3.01B Definitions

Area of Localized Roughness (ALR): Continuous moving average of the 25-foot International Roughness Index (IRI) values for each wheel path using a 250-mm filter.

Mean Roughness Index (MRI): Average of the 0.1-mile IRI values for the left and right wheel paths for the same traffic lane using a 250-mm filter.

Wheel paths: Pair of parallel lines 3 feet left and right of the center of a traffic lane. Left and right wheel paths are based on the direction of travel.

36-3.01C Submittals

36-3.01C(1) General

Not used

36-3.01C(2) Inertial Profiler Data

At least 15 days before measuring pavement smoothness with an inertial profiler, you must register with the Department's secure file sharing system. To obtain information on the registration process, send an e-mail with your contact information to asphalt.smoothness@dot.ca.gov for asphalt and concrete.smoothness@dot.ca.gov for concrete surfaces.

Submit electronic copy of the raw profile data as a PPF file on an authorized data storage device within 12 hours or on the same day of completing smoothness measurement, with a coordinated video or images taken at intervals no greater than 52.8 feet for the existing and baseline profiles. Also, submit a printout or a PDF file listing the following:

1. Profile data collection time and date
2. Data collection software version used
3. Sensor serial number
4. Low- and high-pass filter used
5. 0.1-MRI values

Within 2 business days after each day of profiling, submit the profile information to the Engineer and to the Department's secure file sharing system. After submitting the profile information to the Department’s file sharing system, send a notification of your electronic submittal to the Engineer and to the above electronic mailbox address with the names of the files submitted.

For each surface subject to inertial profile smoothness requirements, the profile data information must include:

1. Raw profile data for each lane
2. ProVAL ride quality analysis report for the MRI of each lane in a PDF file. Report the following:
   2.1. Listing of MRI values for 0.1-mile segments or portions thereof
   2.2. Input data including the specified MRI threshold and fixed segment length
   2.3. Raw profile data name selections
   2.4. Areas exempt from inertial profile smoothness requirements
3. ProVAL ride quality analysis report for the IRI of the left and right wheel paths of each lane in a PDF file. Report the following:
   3.1. Listing of ALR
   3.2. Input data including the specified area of the localized roughness threshold and continuous segment length
   3.3. Raw profile data name selections
   3.4. Areas exempt from inertial profile smoothness
4. GPS data file for each lane. Submit the data file in GPS eXchange file format.
5. Manufacturer's recommended calibration and verification test results for the inertial profiler.
6. Inertial profiler's calibration and verification test results, including results for bounce, block, and the distance measurement instrument.
7. Completed Pavement Smoothness Inertial Profiler Submittal Record.

Submit Asphalt Concrete Pavement Smoothness Corrections Information or Concrete Pavement Smoothness Corrections Information with your final profile data information submittal.

Submit the raw profile data in an unfiltered pavement profile standard (PPF) file format. Use the following file naming convention:

YYYYMMDD_TTCCCRRR_EA_D_L_W_B_E_X_PT.EXT

where:

YYYY = year

MM = month, leading zero

DD = day of the month, leading zero

TT = district, leading zero

CCC = county, 2- or 3-letter abbreviation as shown in section 1-1.08

RRR = route number with no leading zeros

EA = Contract number, excluding the district identification number, expressed as 6 characters

D = traffic direction, *NB*, *SB*, *WB*, or *EB*

L = lane number from left to right in the direction of travel

W = wheel path, *L* for left, *R* for right, or *B* for both

B = beginning station to the nearest foot, such as 10+20, or beginning postmile to the nearest hundredth, such as 25.06 with no leading zero.

E = ending station to the nearest foot, such as 14+20, or ending postmile to the nearest hundredth, such as 28.06 with no leading zero.

X = profile operation, *EXIST* for existing pavement, *BASELINE* for existing pavement after performing repairs, *PAVE* for after paving, and FINAL for completed pavement documentation of compliance.

PT = type of pavement surface profiled, such as Type A HMA, RHMA-G, OGFC, JPCP, or CRCP

EXT = “PPF” for raw profile data file extension.

If you are submitting multiple inertial profiler data files, compress the files into a .ZIP file format and submit them using the file-naming convention TT_EA_X_YYYYMMDD.zip.

36-3.01C(3) Smoothness Corrective Grinding Plan

At least 2 business days before performing corrective grinding for areas that do not meet the smoothness requirements, submit a corrective grinding plan as an informational submittal.

The corrective grinding plan must include:

1. Grinder make and model
2. Grinder wheelbase in feet, measured from the front centerline to the back centerline of the single wheel or tandem wheel spread
3. Grinder head position in feet, measured relative to the centerline of the front single wheel or the front tandem wheel spread
4. Tandem wheel spreads in feet
5. Tabular listing of the planned corrective grinding, including:
   5.1. Begin and End locations in stationing to the nearest foot
   5.2. Width of grind, such as left half lane, right half lane, or full-width lane
   5.3. Corresponding grinder head depths to the nearest 0.01 inch
   5.4. Direction of grind such as forward, reverse, forward-forward, reverse-reverse, forward-reverse, reverse-forward
6. Forecasted improvement in terms of the MRI and ALR values

36-3.01C(4) Straightedge Measurements

Within 2 business days of measuring smoothness with a straightedge, submit a list of the areas requiring smoothness correction or a report stating there are no areas requiring smoothness correction. Identify the areas requiring smoothness correction by:

1. Location number
2. District-County-Route

3. Beginning station or postmile to the nearest 0.01 mile
4. For correction areas within a traffic lane:
   4.1. Lane direction, *NB, SB, EB*, or *WB*
   4.2. Lane number from left to right in the direction of travel
   4.3. Wheel path, *L* for left, *R* for right, or *B* for both
5. For correction areas not within a traffic lane:
   5.1. Identify the pavement area, such as shoulder, weigh station, or turnout
   5.2. Direction and distance from the centerline, *L* for left or *R* for right
6. Estimated size of correction area

36-3.01C(5) Smoothness Quality Control Plan

Submit a written Smoothness Quality Control Plan to the Engineer at or before Preconstruction Meeting. The plan must include:

1. Organization: Contact names, organizational chart, telephone numbers, current certifications and titles, and roles and responsibilities of personnel for monitoring smoothness, collecting profile data, submitting data, pay adjustment requests and reports, and implementing corrective actions.
2. Inertial profiler certification:
   2.1. Inertial profiler certification issued by the Department
   2.2. Operator certification for the inertial profiler issued by the Department
   2.3. Manufacturer's instructions and test procedures for calibration and verification of the inertial profiler
3. Schedule: The methods and timing used for monitoring and/or testing ride quality throughout the placement operation process. Indicate the approximate timing of acceptance testing for the profile operations defined in Section 36-3.01C(6)(b) in relation to placement operations.
4. Layout plan:
   4.1 Establish semipermanent reference points at the beginning and end of the project based on the plans. For each profile run, define additional semipermanent reference points for the starting and end position of each run. Show the position and name of each semipermanent reference point. These reference points must be located outside of the traveled way perpendicular to the starting position of each lane. Where starting positions are adjacent to each other but staggered, use separate starting positions. Semipermanent reference points used to establish the beginning position of a profile run must be labeled in the field and in the pavement profiles using the following naming convention:

   XXX-D-L-STA-VAL

   where:

   XXX = “Beg” for the beginning of each profile run, “End” for the end of each profile run, “ExB” for the beginning point of the areas excluded from inertial profiler testing and “ExE” for the end point of the areas excluded from inertial profiler testing.

   D = traffic direction, *NB*, *SB*, *WB*, or *EB.*

   L = lane number from left to right in the direction of travel, such as “1”, “2”, or “3.”

   STA= station to the nearest foot, such as 10+20. Do not use postmiles.

   VAL= use “INC” where the value of stationing in the pavement profile data file (*.PPF) will increase in the direction of travel. Use “DEC” where the absolute value of the stationing in the pavement profile data file (*.PPF) will decrease in the direction of travel.

   Use the same label name regardless of the stage of the profile.

   4.2 For each semipermanent reference point, include a KMZ file with:
      4.2.1 Color photographs clearly displaying the physical label used to define the semipermanent reference points.
      4.2.2 Listing of GPS coordinates.

Semipermanent reference points, wherever possible, must be recorded by inertial profilers using electronic eye readings of reflectors.

36-3.01C(6) Smoothness Payment Adjustment Request

36-3.01C(6)(a) General

Smoothness payment adjustment data includes a ProVAL project file and a payment adjustment spreadsheet for each lane.

36-3.01C(6)(b) ProVAL Project File

After completing final corrections, submit an electronic ProVAL project (PVP) file for each lane using the same naming convention listed in 36-3.01C(2), except:

B = use the common beginning station found in all profiles included in the PVP file followed by the postmile to the nearest tenth of a mile, such as 528 +00(10.0).

E = use the ending station found in the FINAL profile followed by the postmile to the nearest tenth of a mile such as 681+12(12.9).

X = PAYADJ.

EXT = “PVP” for ProVAL project file extension.

Use a single PVP file for each lane. Each PVP file must contain the PPF files from the profile operation shown in the Profiles Needed by Smoothness Table.

Profiles Needed by Smoothness Table

Profile	Asphalt Target 60/75 Percent Improvement	Concrete Target 60/67.5/75	Grind Existing Concrete Percent Improvement
EXIST	X		X
BASELINE	X		X
PAVE	X	X	
FINAL	X	X	X

Establish and maintain stationing to allow for direct comparison of smoothness data between you and the Engineer in subsequent tests. The profiles must:

1. Align with each other in ProVAL.
2. Use the same beginning station position in all profiles files and in a single PVP project file.
3. Use the same semipermanent reference points for the beginning and ending positions of each profile and semipermanent reference points required by Section 36-3.01C(3)(a).
4. For alignment purposes, the end station determined from the profiles distance measuring instrumentation of each sequentially numbered 0.1-mile segment or portion thereof in the BASELINE, PAVE and FINAL profiles must be no greater than 20 feet in the first mile when compared to the same sequentially numbered segment end station in the EXIST profile. For locations more than 1 mile but less than 2.5 miles, the difference must be prorated from 20 feet to 50 feet. For locations more than 2.5 miles from the beginning position of the profile, the difference must be no greater than 50 feet. Where these differences create an additional sequentially numbered segment and when needed to bring the sequentially numbered segments back into alignment, the event defining the ending position of the partial segment in the PPF file of the BASELINE, PAVE and FINAL profiles may be adjusted no more than 20 feet within the first 2.5 miles, and no more than 50 feet at all other locations. Include the same leave-out sections referenced to the same semipermanent reference points.

36-3.01C(6)(c) Payment Adjustment Spreadsheet

For each lane, submit payment adjustment spreadsheet using the Department-furnished worksheet. Data must be exported directly from the ProVAL project file Ride Quality module into the corresponding worksheet using the following settings:

1. Analysis Type set to “Fixed Interval”
2. Ride Quality Index set to “MRI”
3. Threshold (not applicable)
4. Segment Length (ft) set to “528.00”

Obtain the worksheet from the following site:

https://dot.ca.gov/programs/construction/pavement-smoothness

When sequentially numbered segments are misaligned and adjustments are required as described in Section 36-3.01C(6)(b), make the adjustments within the ProVAL project file before exporting data to a worksheet and notify the Engineer when this occurs.

36-3.01C(7) Inertial Profiler Verification Test

Within 2 business days after the annual cross-correlation testing, submit a ProVAL profiler certification analysis report for the test results to the Engineer and to the electronic mailbox address smoothness@dot.ca.gov.

36-3.01D Quality Assurance

36-3.01D(1) General

Not Used

36-3.01D(2) Certifications

The inertial profiler must display a current certification decal showing the expiration date.

The operator must be certified for each model of inertial profiler operated.

The certifications issued by the Department for the inertial profiler and operator must not be expired.

36-3.01D(3) Quality Control

36-3.01D(3)(a) General

Not Used

36-3.01D(3)(b) Smoothness Measurement

36-3.01D(3)(b)(i) General

Measure pavement smoothness using an inertial profiler.

The following areas are excluded from the MRI smoothness requirements but are subject to ALR:

1. Traffic lanes less than 1,000 feet in length
2. Ramps
3. Turn lanes
4. Acceleration and deceleration lanes

The following areas are excluded from smoothness measurement with an inertial profiler but are subject to the 12-foot straightedge measurement:

1. Areas within 15 feet of manholes, weigh-in-motion, railroad crossing, cattle guards, bus pad, and gutter pans
2. Areas within 25 feet each side from the intersection radius
3. Areas within 25 feet each side from the roundabout radius
4. Shoulders
5. Miscellaneous areas such as medians, gore areas, turnouts, and maintenance pullouts
6. Areas within 15 feet of the beginning of an approach slab or structure, and 40 feet beyond the end of a departure slab or structure

Where measurement with inertial profiler is required:

1. Determine the pavement smoothness by obtaining the IRI for the left and right wheel paths on each traffic lane.
2. Determine the MRI and ALR using FHWA’s engineering software ProVAL.

Where OGFC is required, test the pavement smoothness of the final asphalt or concrete pavement surface before placing OGFC and after placing OGFC.

36-3.01D(3)(b)(ii) Inertial Profiler Calibration and Verification Tests

Notify the Engineer at least 2 business days before performing calibration and verification testing of the inertial profiler.

Conduct the following calibration and verification tests in the Engineer's presence each day before profiling:

1. Block test to verify the accuracy of the height sensor under California Test 387
2. Bounce test to verify the combined accuracy of the height sensor and accelerometer under California Test 387
3. Distance measurement instrument test to verify the accuracy of the distance measuring instrument under California Test 387
4. Manufacturer's recommended tests

Conduct a cross-correlation verification test of the inertial profiler in the Engineer's presence before performing the initial profiling. A verification test must be performed at least annually. Conduct 5 repeat runs of the inertial profiler on an authorized 0.1-mile test section. Calculate a cross-correlation to determine the repeatability of your device under California Test 387 using a ProVAL profiler certification analysis with a 3-foot maximum offset. The cross-correlation must be a minimum of 0.92.

36-3.01D(3)(b)(iii) Collecting and Analyzing Data

Operate the inertial profiler under the manufacturer's instructions. Collect profiling data under AASHTO R 57 at 1-inch recording intervals using a minimum 4-inch line laser sensor and analyze IRI using a 250-mm filter.

Establish semipermanent reference points for aligning inertial profiler runs and locating potential corrective grinding. Maintain semipermanent reference points until Department acceptance testing is completed.

While collecting the profile data to determine the IRI values, record semipermanent reference points at the beginning and end of the profile run and the beginning and end of the following locations in the raw profile data:

1. Bridge approach slabs
2. Bridges
3. Culverts visible on the roadway surface
4. Railroad crossings
5. At-grade intersections
6. Project limits
7. Change in pavement type

Profile the left and right wheel paths of each lane. Determine the MRI for 0.1-mile fixed segments using the ProVAL ride quality analysis with a 250-mm filter. Calculate the MRI of each lane. Segments less than 0.05 mile will not be evaluated for MRI but must comply with ALR requirement. Segments greater than or equal to 0.05 mile and less than or equal to 0.10 mile must comply with the MRI specifications for a 0.1-mile segment. Pay adjustments for segments greater than or equal to 0.05 mile and less than or equal to 0.10 mile will be calculated based on a prorated length. Determine the ALR using ProVAL with the average IRI values for each wheel path using a 25-foot continuous interval and a 250-mm filter.

36-3.01D(4) Department Acceptance

36-3.01D(4)(a) General

The Department accepts pavement surfaces for smoothness based on compliance with the smoothness specifications for the type of pavement surface specified.

For areas that require pavement smoothness determined using a 12-foot straightedge, the pavement surface must not vary from the lower edge of the straightedge by more than:

1. 0.01 foot when the straightedge is laid parallel with the traffic lane centerline
2. 0.02 foot when the straightedge is laid perpendicular to the centerline and extends from edge to edge of a traffic lane
3. 0.02 foot when the straightedge is laid within 24 feet of a pavement conform

36-3.01D(4)(b) Profile Verification

The Engineer may perform verification testing using the Department's inertial profiler. The Engineer notifies you of the Department's intention to perform verification testing. Your acceptance test results are considered acceptable and will be used for incentive and disincentive payments if your mean MRI is within 10 percent of the Department's mean MRI obtained over the same selected project length. When your test results are not considered acceptable, the Department's MRI values will be used in the calculation for incentive and disincentive payments for that evaluated length and the Department will have 15 days to complete an evaluation of both profiler certifications.

You and the Engineer must work together to avoid potential conflicts and to resolve disputes regarding test result discrepancies. Notify the Engineer within 5 business days of receiving the verification test result if you will dispute it. An independent third party will perform referee testing over the same selected project length. Before the third party participates in a dispute resolution, their profiler and operator must be certified under the Department's Profiler Certification Program. The independent third party must have no prior direct involvement with this Contract or no current direct involvement with you. The mean MRI value used in the calculation for incentive and disincentive payments will be from the party whose mean MRI value is closer to the independent third party and the other party pays for the independent third party's testing.

36-3.02 MATERIALS

Not Used

36-3.03 CONSTRUCTION

Notify the Engineer of the start location by station and start time at least 2 business days before each day of profiling.

Before profiling, remove foreign objects from the pavement surface and mark the beginning and ending station on the pavement shoulder. The stationing must be the same when profiling more than one surface.

36-3.04 PAYMENT

Not Used

Replace *Reserved* in section 36-4 with:

36-4.01 GENERAL

Section 36-4 includes specifications for performing work involving residue from grinding and cold planning that contains lead from paint and thermoplastic.

36-4.02 MATERIALS

Not Used

36-4.03 CONSTRUCTION

The residue from grinding or cold planning contains lead from paint and thermoplastic. The average lead concentrations are less than 1,000 mg/kg total lead and 5 mg/L soluble lead. This residue:

1. Is a nonhazardous waste
2. Does not contain heavy metals in concentrations that exceed thresholds established by the Health and Safety Code and 22 CA Code of Regs
3. Is not regulated by the Federal Resource Conservation and Recovery Act, 42 USC § 6901 et seq.

Management of this material exposes workers to health hazards that must be addressed in your lead compliance plan.

36-4.04 PAYMENT

Not Used

^^

39 ASPHALT CONCRETE

Add to the list in the definition of *miscellaneous areas* in section 39-2.01A(2):

8. MVP
9. Tapered Edge

Replace section 39-2.01A(4)(i)(iii) with:

39-2.01A(4)(i)(iii) Pavement Smoothness

Schedule smoothness testing with the Engineer. Unless otherwise authorized, all smoothness testing must be performed in the presence of the Engineer.

Measure smoothness of new pavement alignment or pavement realignment with an inertial profiler. The Department determines smoothness pay adjustments using the Target 60 Pay Adjustment table in Section 39-2.01A(4)(i)(iii)(A).

Measure smoothness of pavement constructed on existing pavement surfaces with an inertial profiler. The Department determines pay adjustments as shown in the applicable Pay Adjustment table.

Measure smoothness of:

1. Existing asphalt concrete surface before performing any work on the surface and provide the Engineer the result labeled as the "EXIST" inertial profiler data file. Notify the Engineer if mean roughness index (MRI) results vary more than 10 percent from the MRI information provided by the Department at the time of advertisement. For projects suspended for more than 30 days, measure the smoothness of the existing surface that has not received an HMA overlay and provide the Engineer the result labeled as "EXISTR" inertial profiler data file. Use the segment MRIs from this profile as the MRI_0.
2. Existing pavement segments if structural repairs such as remove and replace asphalt concrete or leveling courses are made and provide the Engineer the result labeled as "BASELINE" inertial profiler data file.
3. Pavement segments, exclusive of OGFC on new HMA, before performing any HMA smoothness corrections and provide the Engineer the result labeled as "PAVE" inertial profiler data file.
4. Pavement segments, exclusive of OGFC on new HMA, after performing any HMA smoothness corrective work and provide the Engineer the results labeled as "FINAL" inertial profiler data file. Use the "PAVE" inertial profiler data as the "FINAL" inertial profiler data if there is no corrective work in the segment.
5. Pavement segments of OGFC before performing any OGFC smoothness correction. Profile the sections and provide the Engineer the result labeled as "PAVEO" inertial profiler data file.
6. Pavement segments of OGFC after performing any OGFC smoothness corrective work and provide the Engineer the result labeled as "FINALO" inertial profiler data file. Use the "PAVEO" inertial profiler data file as the "FINALO" inertial profiler data file when no corrective work in the segment is performed.

MRI_0 is the lower MRI value from the "EXIST" and "BASELINE" profiles for the 0.1-mi segment and must be used to determine the applicable section:

HMA Pay Adjustment

Total Asphalt Thickness (ft)[a]	MRI_0 (in/mi)	HMA Final MRI (in/mi) Adjustment Table	Applicable Section
≥ 0.30	<165	Target 60 Pay Adjustment	39-2.01A(4)(i)(iii)(A)
	≥165	Percent Improvement Pay Adjustment	39-2.01A(4)(i)(iii)(C)
< 0.30	<135	Target 75 Pay Adjustment	39-2.01A(4)(i)(iii)(B)
	≥135	Percent Improvement Pay Adjustment	39-2.01A(4)(i)(iii)(C)

[a] Total HMA thickness exclusive of OGFC

Notify the Engineer 10 days before collecting inertial profiler data. Allow the Engineer 2 days after receipt of your data to complete inertial profiler verification of all data except the "FINAL" inertial profiler data. Allow the Engineer 10 days after receipt of your data to complete verification of “FINAL” inertial profiler data.

If accepted by the Engineer, the Department uses your inertial profiler data for acceptance and determination of the payment adjustment.

Segments may be correctively ground to improve pay adjustments to full pay. The Department does not allow corrective grinding into positive pay adjustments. The Department determines positive pay adjustment segments before any corrective grinding. Correction of areas of localized roughness in positive pay adjustment segments cannot improve pay.

Corrective Actions:

1. Correction may be diamond grinding or remove and replace at your option.
2. Corrective grinding must comply with section 39-2.01C(16).
3. When OGFC is being placed over the surface of HMA, these requirements apply to the HMA surface of which the OGFC is being placed on. Smoothness requirements for OGFC are specified in Section 39-2.04A(4)(c)(iii).

39-2.01A(4)(i)(iii)(A) Pay Adjustments for Target MRI 60

The Department applies the following pavement smoothness pay adjustments to 0.1-mi segments based on your verified inertial profiler data:

Target 60 Pay Adjustment

MRI_{SEG}(in/mi)	Pay Adjustment per 0.1 mi	Corrective Action[a]
≤ 45.00	+ $900.00	None
45.01 – 55.00	+ ((55.00 – MRI_{SEG}) x $90.00)	None
55.01 - 65.00	Full Pay	None
65.01 – 80.00	- ((MRI_{SEG} – 65.00) x $190.00)	Optional
> 80.00	Not Applicable	Mandatory

[a] See 39-2.01A(4)(i)(iii) Pavement Smoothness

No areas of localized roughness over 160 IRI are allowed.

39-2.01A(4)(i)(iii)(B) Pay Adjustments for Target MRI 75

The Department applies the following pavement smoothness pay adjustments to 0.1-mi segments based on your verified inertial profiler data:

Target 75 Pay Adjustment

MRI_{SEG}(in/mi)	Pay Adjustment per 0.1 mi	Corrective Action[a]
≤ 60.00	+ $450.00	None
60.01 –70.00	+ ((70.00 – MRI_{SEG}) x $45.00)	None
70.01 - 80.00	Full Pay	None
80.01 – 90.00	- ((MRI_{SEG} – 80.00) x $135.00)	Optional
> 90.00	Not Applicable	Mandatory

[a] See 39-2.01A(4)(i)(iii) Pavement Smoothness

No areas of localized roughness over 160 IRI are allowed.

39-2.01A(4)(i)(iii)(C) Acceptance Criteria using Percent Improvement

The Department applies pavement smoothness pay adjustments to 0.1-mi segments based on your verified inertial profiler data. The Department determines payment adjustments using a percent of target MRI (PoT). The target MRI (MRI_t) is determined based on the “EXIST” or "BASELINE" MRI (MRI_0) exclusive of the OGFC and the number of opportunities as shown in the following table:

Target MRI (MRI_t)

Number of Opportunities	Target MRI (MRI_t)
1	= 0.3 x MRI_0 + 35
2	= 0.09 x MRI_0 + 45.5
3	= 0.027 x MRI_0 + 48.7

Note: If the calculated MRI_t is less than 60, use MRI_t = 60 for HMA thickness ≥ 0.3'.
If the calculated MRI_t is less than 75, use MRI_t = 75 for HMA thickness < 0.3'.

Opportunities for improving smoothness include:

1. A single lift of asphalt. Where an HMA layer thickness allows the layer to be placed in more than one lift, the number of opportunities will be equal to the maximum number of lifts the layer can be broken into regardless of aggregate size chosen by the contractor.
2. Micro milling or cold planing not in the same shift as the paving. When the contractor chooses to micro mill or cold plane and pave in the same shift, but has the option to micro mill or cold plane and pave in different shifts, the micro milling or cold planning will still be considered a separate opportunity.

Determine the Percent of Target MRI (PoT) of each completed 0.1-mi segment of lane using the following equation:

(%)PoT = (MRI_{SEG} / MRI_t) x 100 rounded to the nearest tenth of one percent

where:

MRI_{SEG} = the MRI of each 0.1-mi section of completed lane after all corrections.

Payment adjustments for each 0.1-mi segment of lane will be made as shown in the following table:

Percent Improvement Pay Adjustment

PoT	Payment adjustment per 0.1 mi per lane ≥ 0.30'	Payment adjustment per 0.1 mi per lane < 0.30'	Corrective Action in fixed increment[a]
PoT ≤ 75	$900.00	$450.00	May only grind areas to meet localized roughness thresholds
75 < PoT ≤ 90	$900.00 - (PoT – 75.00) x $60.00	$450.00 - (PoT- 75.00) x $30.00	May only grind areas to meet localized roughness thresholds
90 < PoT ≤ 110	Full Pay	Full Pay	May only grind areas to meet localized roughness thresholds
110 < PoT ≤ 125	-(PoT – 110.00) x ($190.00)	-(PoT – 110.00) x ($90.00)	Corrective Actions permitted
If MRI_{SEG} ≤ 90 in/mi and PoT > 125	-(PoT-110.00) x ($190.00)	-(PoT-110.00) x ($90.00)	Corrective Actions permitted
If MRI_{SEG} > 90 in/mi and PoT > 125	Not Applicable	Not Applicable	Mandatory Correction

[a] 39-2.01A(4)(i)(iii) Pavement Smoothness

No areas of localized roughness (ALR) greater than ALR_{MAX} are allowed. ALR_{MAX} is the greater value of 160 in/mi or calculated value using the following equation:

$ALR_{MAX} = 2.1 \times MRI_t$

39-2.01A(4)(i)(iii)(D) Verification Testing

The Engineer verifies your inertial profiler data in accordance with 36-3.01D(3)(b)(ii).

Replace section 39-2.01C(3)(c) with:

39-2.01C(3)(c) Prime Coat

Apply a slow-setting asphaltic emulsion as a prime coat to AB areas designated by the Engineer and at a spread rate from 0.15 to 0.40 gal/sq yd. Do not apply more prime coat than can be absorbed completely by the AB in 24 hours.

You may modify the prime coat application rates if authorized.

Close areas receiving prime coat to traffic. Do not allow tracking the prime coat onto pavement surfaces beyond the job site.

Delete the row for *For RAP Substitution equal to or less than 15%* of the RSS for the table in item 3 in the list in the paragraph of section 39-2.02A(4)(e).

Replace the row for *For RAP Substitution greater than 15%* of the RSS for the table in item 3 in the list in the paragraph of section 39-2.02A(4)(e) with:

For RAP Substitution greater than 15% Moisture susceptibility (max, psi, dry strength)	AASHTO T 283	300

footnote h of the RSS for the table in item 3 in the list in the paragraph of section 39-2.02A(4)(e) with:

[h]Not required for the following areas in District 8:
1. Riverside County: Route 10, post mile 56.95 to 156.49; Route 111, post mile 0.00 to 28.53
2. San Bernardino County: Route 15, post mile 29.00 to 186.24; Route 40; Route 58; Route 138, post mile 0.00 to 15.20; Route 395

Replace the row for *Moisture susceptibility (min, psi, wet strength)* in the table in item 3 in the list in the paragraph of section 39-2.02A(4)(e) with:

Moisture susceptibility (min, tensile strength ratio)	AASHTO T 283	70

Delete the row for *For RAP substitution equal to or less than 15%* of the RSS for the table in the 1st paragraph of section 39-2.02B(2).

Replace the row for *For RAP substitution greater than 15%* of the RSS for the table in the 1st paragraph of section 39-2.02B(2) with:

For RAP Substitution greater than 15% moisture susceptibility (max, psi, dry strength)	AASHTO T 283[c]	300[e]

Replace footnote e of the RSS for the table in the 1st paragraph of section 39-2.02B(2) with:

[e]Not required for the following areas in District 8:
1. Riverside County: Route 10, post mile 56.95 to 156.49; Route 111, post mile 0.00 to 28.53
2. San Bernardino County: Route 15, post mile 29.00 to 186.24; Route 40; Route 58; Route 138, post mile 0.00 to 15.20; Route 395

Replace the row for *Moisture susceptibility, wet strength* in the table in the 1st paragraph of section 39-2.02B(2) with:

Moisture susceptibility (min, tensile strength ratio)	AASHTO T 283[c]	70

Replace *Reserved* in section 39-2.02B(3) with:

The grade of asphalt binder for Type A HMA must be PG 64-28 M.

For Type A HMA using RAP substitution of greater than 15 percent of the aggregate blend, the virgin binder grade must comply with the PG binder grade specified above with 6 degrees C reduction in the upper and lower temperature classification.

For Type A HMA using RAP substitution of 15 percent or less of the aggregate blend, the grade of the virgin binder must comply with the PG binder grade specified above.

Delete the row for *Moisture susceptibility (min, psi, dry strength)* in the table in item 2 in the list in the paragraph of section 39-2.03A(4)(e)(i).

Replace the row for *Moisture susceptibility (min, psi, wet strength)* in the table in item 2 in the list in the paragraph of section 39-2.03A(4)(e)(i) with:

Moisture susceptibility (min, tensile strength ratio)	AASHTO T 283	70

Delete the row for *Moisture susceptibility, dry strength* in the table in the 1st paragraph of section 39-2.03B(2).

Replace the row for *Moisture susceptibility, wet strength* in the table in the 1st paragraph of section 39-2.03B(2) with:

Moisture susceptibility (min, tensile strength ratio)	AASHTO T 283	70

Add to section 39-2.03B(3)(a):

The grade of asphalt binder for RHMA-G must be PG 64-16.

Replace section 39-2.04A(4)(c)(iii) with:

39-2.04A(4)(c)(iii) Pavement Smoothness of OGFC

The pavement smoothness of a 0.1 mi segment of OGFC must comply with the requirements shown in the following table:

OGFC Pavement Smoothness Acceptance Criteria

OGFC placement on	Applicable Section
Existing pavement	39-2.04A(4)(c)(iii)(A)
Existing Pavement with Cold Plane	39-2.04A(4)(c)(iii)(B)
HMA Overlay or New Construction	39-2.04A(4)(c)(iii)(C)

Corrective action is required only to reduce ALR below the maximum allowed. Corrective action must not reduce pavement thickness more than allowed in section 39-2.01C(16). Correction may be diamond grinding or remove and replace at your option. The maximum pay adjustment for remove and replace areas is full pay.

39-2.04A(4)(c)(iii)(A) OGFC Paved on Existing Pavement

The Department applies pavement smoothness pay adjustments to 0.1-mi segments based on your verified profiler data. The Department determines pay adjustments using a percent of target MRI (PoT). The target MRI for OGFC (MRI_{TO}) is determined using the following equation:

$MRI_{TO} = 0.3 \times MRI_0 + 35$. If the calculated MRI_{TO} is less than 75 in/mi, use $MRI_{TO} = 75$ in/mi.

where:
MRI_0 = "BASELINE" MRI

Determine the Percent of Target MRI (PoT) of each completed 0.1-mi segment of lane using the following equations:

(%) $PoT = (MRI_{SEGO} / MRI_{TO}) \times 100$ rounded to the nearest tenth of one percent

where:
MRI_{SEGO} = MRI of each 0.1-mi segment from PAVE profile for OGFC paving.

Payment adjustments for each 0.1-mi segment of lane will be made as shown in the following table:

Percent Improvement Pay Adjustment

PoT	Payment adjustment per 0.1 mi per lane	Corrective Action in fixed increment
PoT ≤ 75%	$450.00	May only grind to meet ALR thresholds
75% < PoT ≤ 90%	$450.00 - (PoT-75.00) x $30.00	May only grind to meet ALR thresholds
90% < PoT ≤ 110%	Full Pay	May only grind to meet ALR thresholds
110% < PoT ≤ 125%	-(PoT – 110.00) x ($90.00)	May only grind to meet ALR thresholds
PoT > 125%	-(PoT-110.00) x ($90.00)	May only grind to meet ALR thresholds

Corrective action required only to reduce ALR below the maximum allowed. Corrective action must not reduce pavement thickness more than allowed in section 39-2.01C(16). Correction may be diamond grinding or remove and replace at your option. The maximum pay adjustment for remove and replace areas is full pay.

No areas of localized roughness greater than ALR_{MAX} is allowed. ALR_{MAX} is the greater value of 160 in/mi or calculated value using the following equation:

$ALR_{MAX} = 2.1 \times MRI_{TO}$

39-2.04A(4)(c)(iii)(B) OGFC Paved on Existing Pavement with a Cold Planed Surface

The following pavement smoothness pay adjustments will be applied to segments where a bid item for cold plane asphalt concrete applies:

Target 75 Pay Adjustment

MRI_{SEG}(in/mi)	Pay Adjustment per 0.1 mi	Corrective Action
≤ 60.00	+ $450.00	May only grind to meet ALR thresholds
60.01 –70.00	+ ((70.00 – MRI_{SEGO}) x $45.00)	May only grind to meet ALR thresholds
70.01 - 80.00	Full Pay	May only grind to meet ALR thresholds
> 80.00	- ((MRI_{SEGO} – 80.00) x $135.00)	May only grind to meet ALR thresholds

MRI_{SEGO} = MRI of each 0.1-mi segment from PAVE profile for OGFC paving.

Corrective action is required only to reduce ALR below the maximum allowed. Corrective action must not reduce pavement thickness more than allowed in section 39-2.01C(16). Correction may be diamond grinding or remove and replace at your option. The maximum pay adjustment for remove and replace areas is full pay.

No areas of localized roughness over 160 IRI are allowed.

39-2.04A(4)(c)(iii)(C) OGFC Paved on New Construction or HMA Overlay

Pavement smoothness of OGFC placed on new construction or HMA overlay must comply with the following requirements for a 0.1-mi section:

The Department applies pavement smoothness pay adjustments to 0.1-mi segments based on your verified inertial profiler data.

The Department determines payment adjustments using a percent of targeted MRI (PoT) for the OGFC. The MRI_{TO} of the segment must be less than or equal to $MRI_{FINALHMA}$.

Determine the Percent of Target MRI (PoT) of each completed 0.1-mi segment of lane using the following equations:

(%) PoT = (MRI_{SEGO} / MRI_{TO}) x 100 rounded to the nearest tenth of one percent

where:
MRI_{SEGO} = MRI of each 0.1-mi segment from PAVE profile for OGFC paving.
MRI_{TO} = Final MRI of HMA layer where OGFC is placed on ($MRI_{FINALHMA}$)

Pay adjustments for each 0.1-mi segment of lane will be made as shown in the following table:

Percent Improvement Pay Adjustment

PoT	Payment adjustment per 0.1 mi per lane	Corrective Grinding in fixed increment
PoT ≤ 100% of MRI_{TO}	Full Pay	May only grind to meet ALR thresholds
PoT > 100% of MRI_{TO}	-(PoT-100.00) x ($100.00)	May only grind to meet ALR thresholds

Corrective action is required only to reduce ALR below the maximum allowed. Corrective action must not reduce pavement thickness more than allowed in section 39-2.01C(16). Correction may be diamond grinding or remove and replace at your option. Remove and replace areas maximum pay adjustment is full pay.

No areas of localized roughness over 160 in/mi are allowed.

^^

40 CONCRETE PAVEMENT

Replace *Reserved* in section 40-1.01C(5) with:

At least 5 business days before Just-In-Time (JIT) training for JPCP, submit:

1. Instructor's name and qualifications
2. Training location
3. 1 copy of:
   3.1. Course syllabus
   3.2. Handouts
   3.3. Presentation materials

The Engineer provides training evaluation forms. Each attendee must complete training evaluation within 5 business days after JIT training. Submit completed forms to the Engineer and the electronic mailbox address:

HQ_Construction_Engineering@dot.ca.gov

The Engineer may waive training for personnel who have completed equivalent training within the 12 months preceding JIT training. Submit certificates of completion for the equivalent training.

Replace *Reserved* in section 40-1.01D(2) with:

Your personnel required to attend the preconstruction meeting must also complete JIT training for JPCP. Provide the facility for the training.

JIT training may be an extension of the preconstruction meeting and must be:

1. At least 4 hours long
2. Conducted at a mutually agreed place

3. Completed at least 20 days before you start paving activities
4. Conducted during normal working hours

Provide a JIT training instructor who is experienced with the specified pavement construction methods, materials, and tests. The instructor must not be your employee or a Department field staff member. Upon JIT training completion, the instructor must issue a certificate of completion to each participant.

The Department pays you for 1/2 of the cost for providing the JIT training. The Engineer determines the costs under section 9-1.04 except no markups are added. The costs includes training materials, facility use, and the JIT training instructor's wages, including expenses for travel, lodging, meals and presentation materials. The Department does not pay your costs for attending JIT training.

Replace the row for pavement smoothness in the table in the 1st paragraph of section 40-1.01D(8)(c)(i) with:

Pavement smoothness	California Test 387, AASHTO R 56, and AASHTO R 57	1. No Area of Localized Roughness greater than 160 in/mi, except when grinding existing pavement 2. For Mean Roughness Index (MRI) acceptance, refer to the Concrete Pavement Smoothness Selection Table in section 40-1.01D(8)(c)(iii)

Replace the first sentence of section 40-1.01D(8)(c)(iii) with:

The Department verifies and accepts pavement smoothness based on the results of your inertial profiler testing per Section 36-3.

For grinding existing concrete pavement, measure profile:

1. Before any work is performed to calculate existing MRI.
2. After any pavement replacement work is performed but before grinding to calculate baseline MRI.
3. After grinding is complete to calculate final MRI.

For all other concrete pavement project types, measure profile:

1. After placing concrete but before performing any smoothness correction to calculate pavement MRI.
2. After performing any smoothness correction to calculate final MRI.

Pavement smoothness is measured per Section 36-3. The following tables show the pavement and project types and the applicable smoothness. A partial section less than 0.05 mi will not receive proportional pay adjustment but still must meet ALR thresholds.

Concrete Pavement Smoothness Selection Table

Pavement Type	Project Type	Smoothness Table
CRCP	New alignment or reconstruction	Target 60
	Widening or lane replacement	Target 67.5
JPCP	New alignment or reconstruction	
	Widening or lane replacement	Target 75
CRCP/JPCP	Grinding existing pavement	Percent Improvement (PI)

Target 60 Smoothness Table

0.1-mi MRI (in/mi)	Pay Adjustment/0.1 mi	Corrective Action[a]
≤ 45.00	+ $1500	None
45.01 – 55.00	+ ((55 - *MRI*) x $150)	None
55.01 – 65.00	0	None
65.01 – 80.00	- ((*MRI* - 65) x $150)	Optional[b]
> 80.00	-	Mandatory[c]

[a]Corrective action must not reduce pavement thickness below minimums in section 40-1.01D(8)(c)(iv). Applicable to MRI only.
[b]Diamond grinding allowed.
[c]Correction is diamond grinding.

Target 67.5 Smoothness Table

0.1-mi MRI (in/mi)	Pay Adjustment/0.1 mi	Corrective Action[a]
≤ 50.00	+ $1500	None
50.01 – 60.00	+ ((60 - *MRI*) x $150)	None
60.01 – 75.00	0	None
75.01 – 90.00	- ((*MRI* - 75) x $150)	Optional[b]
> 90.00	-	Mandatory[c]

[a]Corrective action must not reduce pavement thickness below minimums in section 40-1.01D(8)(c)(iv). Applicable to MRI only.
[b]Diamond grinding allowed.
[c]Correction is diamond grinding.

Target 75 Smoothness Table

0.1-mi MRI (in/mi)	Pay Adjustment/0.1 mi	Corrective Action[a]
≤ 50.00	+ $1500	None
50.01 – 60.00	+ ((60 - *MRI*) x $150)	None
60.01 – 90.00	0	None
> 90.00	-	Mandatory[b]

[a]Corrective action must not reduce pavement thickness below minimums in section 40-1.01D(8)(c)(iv). Applicable to MRI only.
[b]Mandatory correction is diamond grinding.

The Department does not pay for mandatory smoothness corrections. Grinding to improve pay to positive pay adjustments is not allowed. Corrective grinding is only allowed to avoid negative pay adjustments.

Pavement smoothness pay adjustments are applied in addition to other pay adjustments.

The corrective action for grinding existing concrete pavement project types or new continuous precast concrete pavement is based on the final MRI, as shown in the following table:

Percent Improvement Smoothness Table

0.1-mi MRI_{exist}[a] (in/mi)	0.1-mi MRI_{final}[b] (in/mi)	Corrective Action
≤ 100	≤ 60	None
	>60	Mandatory[c]
> 100	≤ 0.6 x MRI_{exist}	None
	> 0.6 x MRI_{exist}	Mandatory[c]

[a]Existing MRI. When grinding a new continuous precast concrete pavement, the existing MRI is the newly constructed precast concrete pavement prior to grinding.
[b]Final MRI. When grinding a new precast concrete pavement, the final MRI cannot be higher than 90 in/mi.
[c]Mandatory correction is another pass of diamond grinding.

^^

DIVISION VI STRUCTURES

45 GENERAL

^^

48 TEMPORARY STRUCTURES

Add to section 48-2.01C(2):

The review time for shop drawings for specific structures or portions of structures is shown in the following table:

Structure or portion of structure	Total review time
Moreno Beach Drive OC (Replace) (56-0845) Stages 1 & 2	30 days

^^

49 PILING

Add to section 49-1.03:

Expect difficult pile installation due to the conditions shown in the following table:

Pile location		Conditions
Bridge no.	Support location	
56-0845	All supports	Caving soils, groundwater, underground utilities, traffic control

Add to section 49-3.02B(6)(c):

The synthetic slurry must be one of the materials shown in the following table:

Material	Manufacturer
SlurryPro CDP	KB INTERNATIONAL LLC 735 BOARD ST STE 209 CHATTANOOGA TN 37402 (423) 266-6964
Super Mud	PDS CO INC 105 W SHARP ST EL DORADO AR 71731 (870) 863-5707
Shore Pac GCV	CETCO CONSTRUCTION DRILLING PRODUCTS 2870 FORBS AVE HOFFMAN ESTATES IL 60192 (800) 527-9948
Terragel or Novagel Polymer	GEO-TECH SERVICES LLC 220 N. ZAPATA HWY STE 11A-449A LAREDO TX 78043 (210) 259-6386
BIG FOOT	MATRIX CONSTRUCTION PRODUCTS 50 S MAIN ST STE 200 NAPERVILLE IL 60540 (877) 591-3137
POLY-BORE	BAROID INDUSTRIAL DRILLING PRODUCTS 3000 N SAM HOUSTON PKWY EAST HOUSTON TX 77032 (877) 379-7412

Use synthetic slurries in compliance with the manufacturer's instructions. Synthetic slurries shown in the above table may not be appropriate for a given job site.

Synthetic slurries must comply with the Department's requirements for synthetic slurries to be included in the above table. The requirements are available from the Offices of Structure Design, P.O. Box 168041, MS# 9-4/11G, Sacramento, CA 95816-8041.

SlurryPro CDP synthetic slurry must comply with the requirements shown in the following table:

SlurryPro CDP

Quality characteristic	Test method	Requirement
Density During drilling (pcf) Before final cleaning and immediately before placing concrete (pcf)	Mud weight (density), API RP 13B-1, section 4	 ≤ 67.0[a] ≤ 64.0[a]
Viscosity During drilling (sec/qt) Before final cleaning and immediately before placing concrete (sec/qt)	Marsh funnel and cup. API RP 13B-1, section 6.2	 50–120 ≤ 70
pH	Glass electrode pH meter or pH paper	6.0–11.5
Sand content, percent by volume Before final cleaning and immediately before placing concrete (%)	Sand, API RP 13B-1, section 9	 ≤ 1.0

NOTE: Slurry temperature must be at least 40 °F when tested.
[a]If authorized, you may use slurry in a salt water environment. The allowable density of slurry in a salt water environment may be increased by 2 pcf.

Super Mud synthetic slurry must comply with the requirements shown in the following table:

Super Mud

Quality characteristic	Test method	Requirement
Density During drilling (pcf) Before final cleaning and immediately before placing concrete (pcf)	Mud weight (density), API RP 13B-1, section 4	 ≤ 64.0[a] ≤ 64.0[a]
Viscosity During drilling (sec/qt) Before final cleaning and immediately before placing concrete (sec/qt)	Marsh funnel and cup. API RP 13B-1, section 6.2	 32–60 ≤ 60
pH	Glass electrode pH meter or pH paper	8.0–10.0
Sand content, percent by volume Before final cleaning and immediately before placing concrete (%)	Sand, API RP 13B-1, section 9	 ≤ 1.0

NOTE: Slurry temperature must be at least 40 °F when tested.
[a]If authorized, you may use slurry in a salt water environment. The allowable density of slurry in a salt water environment may be increased by 2 pcf.

Shore Pac GCV synthetic slurry must comply with the requirements shown in the following table:

Shore Pac GCV

Quality characteristic	Test method	Requirement
Density During drilling (pcf) Before final cleaning and immediately before placing concrete (pcf)	Mud weight (density), API RP 13B-1, section 4	 ≤ 64.0[a] ≤ 64.0[a]
Viscosity During drilling (sec/qt) Before final cleaning and immediately before placing concrete (sec/qt)	Marsh funnel and cup. API RP 13B-1, section 6.2	 33–74 ≤ 57
pH	Glass electrode pH meter or pH paper	8.0–11.0
Sand content, percent by volume Before final cleaning and immediately before placing concrete (%)	Sand, API RP 13B-1, section 9	 ≤ 1.0

NOTE: Slurry temperature must be at least 40 °F when tested.
[a]If authorized, you may use slurry in a salt water environment. The allowable density of slurry in a salt water environment may be increased by 2 pcf.

Terragel or Novagel Polymer synthetic slurry must comply with the requirements shown in the following table:

Terragel or Novagel Polymer

Quality characteristic	Test method	Requirement
Density During drilling (pcf) Before final cleaning and immediately before placing concrete (pcf)	Mud weight (density), API RP 13B-1, section 4	 ≤ 67.0[a] ≤ 64.0[a]
Viscosity During drilling (sec/qt) Before final cleaning and immediately before placing concrete (sec/qt)	Marsh funnel and cup. API RP 13B-1, section 6.2	 45–104 ≤ 104
pH	Glass electrode pH meter or pH paper	6.0–11.5
Sand content, percent by volume Before final cleaning and immediately before placing concrete (%)	Sand, API RP 13B-1, section 9	 ≤ 1.0

NOTE: Slurry temperature must be at least 40 °F when tested.
[a]If authorized, you may use slurry in a salt water environment. The allowable density of slurry in a salt water environment may be increased by 2 pcf.

BIG-FOOT synthetic slurry must comply with the requirements shown in the following table:

BIG-FOOT

Quality characteristic	Test method	Requirement
Density During drilling (pcf) Before final cleaning and immediately before placing concrete (pcf)	Mud weight (density), API RP 13B-1, section 4	 ≤ 64.0[a] ≤ 64.0[a]
Viscosity During drilling (sec/qt) Before final cleaning and immediately before placing concrete (sec/qt)	Marsh funnel and cup. API RP 13B-1, section 6.2	 30–125 55-114
pH	Glass electrode pH meter or pH paper	8.5–10.5
Sand content, percent by volume Before final cleaning and immediately before placing concrete (%)	Sand, API RP 13B-1, section 9	 ≤ 1.0

NOTE: Slurry temperature must be at least 40 °F when tested.

[a]If authorized, you may use slurry in a salt water environment. The allowable density of slurry in a salt water environment may be increased by 2 pcf.

POLY-BORE synthetic slurry must comply with the requirements shown in the following table:

POLY-BORE

Quality characteristic	Test method	Requirement
Density During drilling (pcf) Before final cleaning and immediately before placing concrete (pcf)	Mud weight (density), API RP 13B-1, section 4	 62.8-65.8[a] 62.8-64.0[a]
Viscosity During drilling (sec/qt) Before final cleaning and immediately before placing concrete (sec/qt)	Marsh funnel and cup. API RP 13B-1, section 6.2	 50–80 50-80
pH	Glass electrode pH meter or pH paper	7.0–10.0
Sand content, percent by volume Before final cleaning and immediately before placing concrete (%)	Sand, API RP 13B-1, section 9	 ≤ 1.0

NOTE: Slurry temperature must be at least 40 °F when tested.

[a]If authorized, you may use slurry in a salt water environment. The allowable density of slurry in a salt water environment may be increased by 2 pcf.

Add to section 49-3.02C(1):

If the piling center-to-center spacing is less than 4 pile diameters, do not drill holes until 24 hours have elapsed after concrete placement in the preceding pile and your prequalification test results for the concrete mix design show that the concrete will attain at least 1800 psi compressive strength at the time of drilling or driving.

^^

50 PRESTRESSING CONCRETE

Replace the 2nd paragraph of section 50-1.01C(3) with:

For initial review, submit:

1. 8 copies for railroad bridges unless the project includes a BNSF Railway underpass
2. 10 copies for railroad bridges if the project includes a BNSF Railway underpass
3. 6 copies for structures other than railroad bridges

^^

51 CONCRETE STRUCTURES

Replace the 1st paragraph of section 51-1.01C(1) with:

Submit a deck placement plan for concrete bridge decks. Include in the placement plan your method and equipment for ensuring that the concrete bridge deck is kept damp by misting immediately after finishing the concrete surface.

Replace *Reserved* in section 51-1.01D(1) with:

The job site must have at least 4 airborne emissions monitoring points, including the mixing point, application point, and point of nearest public contact. Monitor airborne emissions during methacrylate crack treatment activities.

Add to section 51-7.01D:

The payment quantity for Minor Concrete (Raised Median) includes drill and bond dowels, bar reinforcing steel, welded wire mesh, and stamped concrete texture.

^^

52 REINFORCEMENT

Replace section 52-4 with:

52-4 ELECTRIC-RESISTANCE WELDED STIRRUPS FOR CONCRETE BARRIER REINFORCEMENT CAGES

52-4.01 GENERAL

52-4.01A Summary

Section 52-4 includes specifications for welding longitudinal support wire to stirrups using electric-resistance welding (ERW) to partially fabricate reinforcing cages for concrete barriers.

Electric-resistance welded supports may be used only for concrete barrier stirrups on structures with uncoated reinforcement.

You may use ERW to weld support wire to no.5 reinforcing bars or smaller. The support wire must be W 6.5 or smaller.

52-4.01B Definitions

partially fabricated reinforcing cage: Stirrups for concrete barrier reinforcing cages held in position by welded longitudinal support wires.

lot: 150 count, or fraction thereof, of welds for each size of reinforcing bar and support wire and for each change to the welding equipment settings.

52-4.01C Submittals

52-4.01C(1) General

Not Used

52-4.01C(2) Certificate of Compliance

Submit a certificate of compliance for each shipment of partially fabricated cages. Include with the submittal:

1. Identification of each cage including lot numbers, welds traceable by welding clamp, and location tracking information.
2. Grade and size of welded reinforcement used for the stirrups and support wire.
3. For the reinforcing bar and support wire:
   3.1. Heat number
   3.2. Mill certificate

52-4.01C(3) Test Samples

Submit QA test samples to METS.

Include copies of certificates of compliance with the test samples.

52-4.01C(4) Welding Quality Control Plan

Submit 2 copies of a welding QC plan for each subcontractor or supplier performing ERW. The QC plan must include:

1. WPSs
2. Names and certifications of welding personnel, including qualifications for the QC Manager
3. Welding procedures including current setting, welding clamp force, weld time, and hold time for each size of reinforcement to be welded
4. Welding equipment manufacturer's operating instructions including the recommended calibration frequency of the welding equipment
5. Documentation of ERW equipment calibration
6. Fabricator's *QC Process Control Manual*
7. Method for identifying welds and tracking lots

For the contents, format, and organization required for a welding QC plan, go to the METS website.

52-4.01C(5) Shop Drawings

Submit shop drawings showing the stirrup positioning, welded connections of the support wire to the stirrups, and welding equipment layout. Allow 15 days for the Engineer's review.

52-4.01C(6) Prefabrication Test Results

Submit the prefabrication test results within 3 days of prefabrication testing. The prefabrication test results must include:

1. Contract number
2. Bridge number
3. Welds identified by welding clamp
4. Reinforcement and support wire sizes
5. Test specimen length
6. Physical condition of test samples
7. Notable defects
8. Ultimate tensile strength of each sample
9. Location of necking area of each sample

Allow 3 business days for the Engineer's review.

52-4.01C(7) Quality Control Test Reports

Submit a QC test report within 7 days of testing for each lot. The report must be prepared by the authorized laboratory performing the testing. The report must be signed by the QC manager. For each lot, the report must include:

1. Contract number
2. Bridge number
3. Lot numbers with welds identified by welding clamp
4. Installed location of completed cages
5. Reinforcement and support wire sizes
6. Cage types
7. Cage lengths
8. Test specimen length
9. Physical condition of test samples
10. Notable defects
11. Ultimate tensile strength of each sample
12. Location of necking area of each test sample

Allow 3 business days for the Engineer's review.

52-4.01D Quality Assurance

52-4.01D(1) General

Provide a welding QC manager. The QC manager must be registered as a civil engineer in the State or currently certified as a CWI.

52-4.01D(2) Prewelding Meeting

Before submitting a welding QC plan, hold a prewelding meeting to discuss the work and the requirements for the welding QC plan. The meeting attendees must include the Engineer, your welding QC manager, and a representative from each entity performing welding or welding inspection.

52-4.01D(3) Test Samples

Samples must be a minimum length of 4 feet of bar reinforcing steel with a support wire welded at midpoint. You may furnish shorter length samples if authorized.

Prepare the samples using the same materials, procedures, equipment, and equipment settings used in the work.

The welding clamps that produce the samples are determined by the Engineer.

Prepare QC test samples and the Department acceptance test samples concurrently:

1. During fabrication of samples representing the 1st lot
2. From 1 of every 5 subsequent lots, or fraction thereof, randomly selected by the Engineer

After receiving notification that lots are ready for QC testing, the Engineer (1) randomly selects test samples to represent each lot and (2) places tamper-proof markings or seals on the test samples.

Before transporting test samples to an authorized laboratory and METS:

1. Securely bundle and package the test samples for each test in a way that preserves their condition during transportation
2. Identify each test sample by lot number and Contract number using weatherproof markings
3. Attach a completed Sample Identification Card to each bundle

If a sample show signs of tampering before testing, the sample is rejected.

52-4.01D(4) Quality Control

52-4.01D(4)(a) General

Test the samples for tensile strength under California Test 670, Section E, Part III, Tensile Test.

Tensile testing must be performed by an authorized laboratory. The laboratory must be on the Authorized Laboratories List for testing reinforcing steel splices.

52-4.01D(4)(b) Prefabrication Testing

Before the start of fabrication of production cages, prepare 4 samples from each welding clamp.

Notify the Engineer at least 5 business days before fabricating the samples.

If 3 or more of the 4 samples from each welding clamp attain the specified minimum tensile strength, the Department accepts the prefabrication test results.

If 2 of the 4 samples attain the specified minimum tensile strength, determine the cause of the failure and take corrective action as specified in section 52-4.01D(4)(c). Fabricate 4 additional samples from the clamp that produced the noncompliant samples and perform tensile tests until at least 3 of the 4 samples attain the specified minimum tensile strength.

Do not start fabrication of production cages until the Department accepts the test results.

52-4.01D(4)(c) Fabrication Testing

During fabrication of production cages, for each lot prepare 8 test samples.

At least 5 business days before performing fabrication testing, notify the Engineer of:

1. Date of the testing
2. Location of the authorized laboratory where the tests will be conducted
3. Number of lots to be tested

Do not perform tests on test samples from bundles containing fewer than 8 samples. Test 4 of the samples. The Engineer determines the samples to be tested.

If 3 or more of the 4 samples from a lot attain the specified minimum tensile strength, the Department accepts the lot.

If 2 of the 4 samples from a lot attain the specified minimum tensile strength, perform additional tests on the remaining samples. If any of the additional samples do not attain the specified minimum tensile strength, the Department rejects the lot.

If a lot is rejected, stop production until the following corrective actions have been performed:

1. QC manager reviews your QC process
2. You have prepared a welding rejection mitigation report describing:
    2.1. Cause of the failure
    2.2. Method used to identify the cause of failure
    2.3. Identification of affected lots
    2.4. Provisions for preventing similar failures in future lots
    2.5. Procedure for repairing or replacing the welded connections in the rejected lot
3. Engineer has notified you that the welding rejection mitigation report is authorized

52-4.01D(5) Department Acceptance

The Department accepts lots based on your QC tension test results specified in section 52-4.01D(4)(c).

The Department performs tensile test on samples from the 1st lot and from 1 of every 5 subsequent lots, or fraction thereof, randomly selected by the Engineer.

If 3 or more of the 4 samples attain the specified minimum tensile strength, the Department accepts the lot.

If 2 of the 4 samples attain the specified minimum tensile strength, fabricate 4 additional samples using the same materials and welding machine settings as the noncompliant lot. If any of the 4 additional samples do not attain the minimum specified tensile strength, the Department rejects the lot.

If QC and Department acceptance testing results have different compliance determinations, the Department will perform QA testing for all subsequent lots until QC testing and the Department testing are

consistent for 2 consecutive lots before resuming testing for 1 of every 5 lots, or fraction thereof, as determined by the Engineer.

52-4.02 MATERIALS

52-4.02A General

Reinforcing bars must comply with ASTM A706, Grade 60.

Support wire must comply with the specifications for plain wire in ASTM A1064.

The tensile strength of reinforcing bars with the support wire welded to the bar must be at least 80,000 psi.

52-4.02B Fabrication

Perform ERW at a fabrication shop using computer-controlled equipment.

Weld the support wire to the stirrups. The stirrups must be positioned as shown. The support wire must be capable of maintaining the dimensions, position, and shape of the stirrups until the cage is complete.

52-4.03 CONSTRUCTION

Provide bracing to avoid collapse of the cage during assembly, transportation, and placement as needed.

Field tack welding of support wire to reinforcement is not allowed.

Wiring longitudinal reinforcement at each stirrup intersection is not required.

52-4.04 PAYMENT

Not Used

^^

56 OVERHEAD SIGN STRUCTURES, STANDARDS, AND POLES

Replace *Reserved* in section 56-2.03B(2) with:

Section 56-2.03B(2) includes specifications for removing a sign structure.

Removing an overhead sign structure includes removing:

1. Frames, braces, supports, and brackets
2. Portions of foundations
3. Sign panels
4. Mounting hardware for light fixtures
5. Walkways, safety railing, gutter
6. Electrical equipment for sign lighting
7. Hardware
8. Posts

Removing a bridge mounted sign structure includes removing:

1. Frames, braces, supports, and brackets
2. Sign panels
3. Mounting hardware for light fixtures
4. Walkways, safety railing, and gutter
5. Electrical equipment for sign lighting
6. Hardware

You may abandon concrete foundations in place, except remove the top portion of the foundation, including anchor bolts, reinforcing steel, and conduits, to a depth of at least 3 feet below the adjacent finished grade. Backfill and compact the resulting holes with material at least equal in quality to the surrounding material.

Remove the sign's conduit and wiring to the nearest pull box. Remove fuses within spliced connections in the pull box.

Add to section 56-3.01C(1):

The sign mounting hardware must be installed at the locations shown.

Install non-illuminated street name signs on signal mast arms using a minimum 3/4 by 0.020-inch round edge stainless steel strap and saddle bracket. Wrap the strap at least twice around the mast arm, tighten, and secure with a 3/4-inch stainless strap seal. Level the sign panel and tighten the hardware securely.

Set the Type 1 standards with the handhole on the downstream side of the pole in relation to traffic or as shown.

^^

59 STRUCTURAL STEEL COATINGS

Add to section 59-3.03:

For the picket railing fence at bridge no. 56-0845,the 2nd finish coat must be black.

^^

60 EXISTING STRUCTURES

Add to section 60-2.01A:

Remove the following structures or portions of structures:

Bridge no./Structure name	Description of work
56-0486/Moreno Beach Drive OC	Remove entire existing structure

^^^^^^^^^^^^^^^^^^^

71 EXISTING DRAINAGE FACILITIES

^^

Replace the 1st and 2nd paragraphs in section 71-3.01C(1) with:

Comply with the following work sequence and notify the Engineer before you start each of the following steps:

1. Control and divert stream
2. Clean and prepare culvert
3. Inspect and evaluate culvert
4. Repair culvert
5. Rehabilitate culvert
6. Restore openings
7. Perform postrehabilitation inspection

Before starting culvert work, control and divert stream flow. Maintain control and diversion until the postrehabilitation inspection report is authorized.

Keep the culvert clean and free of debris until the postrehabilitation report is authorized.

Replace *Reserved* in section 71-3.02 with:

71-3.02A General

Section 71-3.02 includes specifications for filling voids below and around a culvert that have been found during cleaning and inspection.

Wherever pipeliners are shown, fill voids before installing pipeliners.

Wherever there are voids in the materials around the culvert and these voids are greater than 6 inches deep, fill the voids with contact grout.

If grout is used to fill voids:

1. Submit a contact grouting plan under section 71-3.01A(3)(d)
2. Schedule and conduct a pregrouting meeting under section 71-3.01A(4)(b)(iii)

Filling the voids around the culvert with grout is paid for as change order work.

71-3.02B Materials

Not Used

71-3.02C Construction

After receipt of the inspection and evaluation report, the Engineer may order additional void-detection work including probing and hammer sounding. Additional void-detection work is change order work.

Prevent the flow of cementitious material and water from construction activities into waterways and drainage facilities.

If voids are found, install grout ports as ordered. Install valves or removable plugs at grout ports. Probe at each grout port location. The probe must be at least 4 feet long, fit through the grout ports, and be rigid enough to sense probe refusal. Extend grout ports through the invert paving using steel pipes or suitable packers. Grout ports must be watertight. If authorized, you may screw grout ports in place or attach them by other methods. Do not weld grout ports to galvanized surfaces.

Pump grout into voids until it appears that all water and air has been ejected. Plug grout ports or close port valves as soon as you stop pumping the grout.

The maximum injection pressure at the nozzle must not exceed 5 psi for fluid, unsanded grout mix.

Monitor the culvert for deformation and cracks. If cracking occurs in a concrete culvert or lining, reduce the grout injection pressure. If deformation of the existing structure exceeds 1/2 inch at any location, reduce the injection pressure.

Repair any permanent deformations or cracks resulting from your grouting work. The Department does not pay for these repairs.

71-3.02D Payment

Record the quantity of grout that is installed and submit this quantity. The Department does not pay for grout that leaks through to the inside of the culvert. The Department does not pay for grout material that is wasted, disposed of, or remaining on hand after completion of the work.

Replace *Reserved* in section 71-6.03 with:

71-6.03A General

Abandon culverts or pipelines by removing portions of the culverts or pipelines, filling the inside, and backfilling the depressions and trenches to grade. As an alternative to abandoning a culvert or pipeline, you may remove the culvert or pipeline, dispose of it, and backfill.

Notify the Engineer before abandoning a culvert or pipeline.

71-6.03B Materials

Openings into existing structures that are to remain in place must be plugged with minor concrete under section 90.

71-6.03C Construction

Wherever culverts or pipelines intersect side slopes, remove them to a depth of at least 3 feet. Measure the depth normal to the plane of the finished side slope. Abandon the remaining portion of the culvert or pipeline.

Culverts or pipelines that are 12 inches or more in diameter must be completely filled by authorized methods. Backfill with sand that is clean, free draining, and free from roots and other deleterious substances. As an alternative to sand, you may backfill with one of the following:

1. Controlled low-strength material under section 19-3.02G
2. Slurry cement backfill under section 19-3.02E

Ends of culverts and pipelines must be securely closed by a 6-inch-thick, tight-fitting plug or wall of commercial-quality concrete.

71-6.03D Payment

If backfilling inside the culvert or pipeline is required, payment for backfilling inside the culvert or pipeline is paid for as sand backfill. Payment for backfilling outside the culvert or pipeline is included in the payment for abandon culvert or abandon pipeline.

Replace *Reserved* in section 71-6.04 with:

71-6.04A General

Abandon pipe inlets and concrete drainage inlets as shown.

71-6.04B Material

Not Used

71-6.04C Construction

The top portion of the inlets must be removed to a depth of 2 feet below finished grade.

71-6.04D Payment

Payment for salvaging frames and grates is included in the payment for abandon inlet.

Replace the 2nd paragraph in section 71-7.01A with:

Salvage the following:

1. Timber Bulkheads

^^^

72-11.04B(3) Mortar

Hydrated lime must comply with ASTM C207, Type S.

Mortar sand must be commercial-quality and free of organic impurities and lumps of clay and shale.

Mortar for laying rock mulch must consist by volume of 1 part cement, 0 to 0.5 part hydrated lime, and 2.25 to 3 parts mortar sand. Add enough water to make a workable mortar. Accurately measure and thoroughly mix each batch of mortar. Mortar must be freshly mixed as required. Do not re-temper mortar more than 1 hour after mixing.

Reduce the amount of lime as necessary to prevent leaching and efflorescence on finished surfaces.

You may use a premixed packaged blend of cement, lime, and sand, without color, that requires only water to prepare for use as brick mortar or grout. Packages of the premixed mortar must show the manufacture's name, brand, weight, and color identification.

72-11.04C Construction

72-11.04C(1) General

Protect surfaces of completed concrete and other materials exposed to view from spillage, splatters, and other deposits of cementitious materials from construction. Remove these deposits without damage to the materials or exposed surfaces. Stains, efflorescence, laitance, splashes, or spots on the faces of masonry exposed to view must be removed.

72-11.04C(2) Installation on a Mortar Bedding

The top surface of the air-blown mortar or concrete base must be lightly and evenly scored horizontally and vertically with a metal scratcher having grooves not more than 1 inch apart.

Cure the air-blown mortar or concrete base by the water method for at least 2 days.

Lay and embed the rock mulch in approximately 3-inch thick mortar. Embedment must be shoved tight such that mortar is flushed into the joints.

72-11.04D Payment

Not Used

^^

73 CONCRETE CURBS AND SIDEWALKS

Add to section 73-1.02A:

Concrete must be minor concrete complying with section 90-2 and may contain returned plastic concrete complying with section 90-9.

Add to section 73-3.01C:

Within 2 business days of completing the surveys, submit preconstruction and post-construction surveys sealed and signed by one of the following:

1. Land surveyor licensed in the State
2. Engineer who is registered as a civil engineer in the State

Replace *Reserved* in section 73-3.01D(3) with:

For locations shown, perform a preconstruction survey to ensure forms and job site constraints will allow for compliance with required design dimensions and slopes shown. Upon completing the work, perform a post-construction survey to verify design dimensions and slopes requirements are met. The post-construction survey must include a minimum of 3 measurements for each dimension and slope requirement shown. Individual measurements must be equally distributed across the specified slope or dimensional surface. Document and submit these measurements on the Americans with Disabilities Act

Compliance Inspection Report form for the facility type shown. Include the equipment and control used to conduct the survey.

Add to the beginning of section 73-3.03:

Before placing concrete, verify that forms and job site constraints allow the required dimensioning and slopes shown. Immediately notify the Engineer if you encounter job site conditions that will not accommodate the design details. Ordered modifications are change order work.

^^

75 MISCELLANEOUS METAL

Add to the list in the 2nd paragraph of section 75-3.01A:

6. Joint Armor for Pedestrian Walkway

Add to the end of section 75-3.01A:

Bridge deck drainage system consists of:

1. Deck drains
2. Deck drain pipes
3. Expansion couplings
4. Pipe hangers
5. Pipe casings

^^

77 LOCAL INFRASTRUCTURE

Add to *Reserved* section 77 with:

77-1 GENERAL

77-1.01 GENERAL

Section 77-1 includes general specifications for local infrastructure.

77-1.02 MATERIALS

Electrical material and equipment must comply with section 86.

77-1.03 CONSTRUCTION

Install electrical material and equipment under section 87.

77-1.04 PAYMENT

Not Used

Add to *Reserved* section 77 with:

77-2 DECORATIVE BRIDGE LIGHTING SYSTEM

77-2.01 GENERAL

77-2.01A Summary

Section 77-2 includes specifications for constructing Decorative Bridge Lighting System in the City of Moreno Valley.

Bridge Lighting System includes:

1. Foundation
2. Pull boxes
3. Conduit
4. Conductors
5. Standards (City-furnished)
6. Bridge Anchorages
7. Luminaires (City-furnished)
8. Junction boxes
9. Service equipment enclosures
10. Fuse splice connectors

The components of the decorative bridge lighting system (City) are shown on the project plans.

77-2.01B Definitions

Not Used

77-2.01C Submittals

Not Used.

77-2.01D Quality Assurance

Not Used

77-2.02 MATERIALS

77-2.02A General

Not Used

77-2.02B Decorative Bridge Lighting SystemStandards

Decorative bridge lighting system standards will be City-furnished.

You must furnish decorative bridge lighting system standard anchor plates and bolts. Anchor bolt dimensions and bolt circle will be provided by the Engineer.

77-2.02C Decorative Bridge Luminaires

Decorative Bridge Luminaires will be City-furnished

77-2.03 CONSTRUCTION

Coordinate with Moreno Valley Utilities prior to connecting metered service.

Install fused splice connectors inside the adjacent pull box.

Install decorative bridge lighting system standard anchor plates and bolts. Anchorage bolt dimensions and bolt circle will be provided by the Engineer.

77-2.04 PAYMENT

Not Used

Add to *Reserved* section 77 with:

77-3 CLOSED CIRCUIT TELEVISION SYSTEM (CITY)

77-3.01 GENERAL

77-3.01A Summary

Section 77-3 includes specifications for constructing closed circuit television (City) in the City of Moreno Valley.

Closed circuit television (City) includes:

1. Foundation
2. Pull boxes
3. Conduit
4. Conductors
5. Standards
6. Anchor bolts

7. Closed circuit television (CCTV) pan, tilt, and zoom (PTZ) Camera Assembly (City-furnished)
8. CCTV Cabinet
9. CCTV POE injector
10. Ethernet switch
11. Wireless modem
12. Modem antenna

The components of the closed circuit television (City) are shown on the project plans.

77-3.01B Definitions

Not Used

77-3.01C Submittals

Submit the manufacturer's QC test data for the CCTV cabinet as an informational submittal.

77-3.01D Quality Assurance

Not Used

77-3.02 MATERIALS

77-3.02A General

Electrical material must comply with the City of Moreno Valley Public Works Department.

77-3.02B Fiber Optic Conduits

Fiber optic conduit located in the bridge sidewalk must be high density polyethelene (HDPE).

Conduits must be color coded. The color schedule will be provided by the Engineer.

77-3.02C Fiber Optic Pull Box

Pull box covers must be stamped “FIBER OPTIC” and “CITY OF MORENO VALLEY”.

77-3.02D Closed Circuit Television Cabinets

Closed circuit television cabinet must:

1. Comply with Chapter 6 of the TEES
2. Be Model 334 with power distribution assembly (PDA), but without detector input file
3. Be provided with one fixed and one slide out shelf attached to the 19" rack mounted cage

The Engineer will provide you with a layout for installing the following City-furnished equipment to be located within the CCTV cabinet:

1. CCTV POE injector
2. Ethernet switch
3. Wireless modem
4. Modem antenna

77-3.03 CONSTRUCTION

After conduit is installed, but before installation of the pull tape, demonstrate to the Engineer that all conduits are free of obstructions by passing a line through each conduit under air pressure.

See temporary traffic signal plans for installation of temporary CCTV cameras. CCTV cameras be moved to provide minimal obstruction to your operations. Any movement of the temporary pole must be approved in writing by the Engineer. Install a pole mounted CCTV cabinet and provide a temporary power connection from the existing Type III electrical service.

Temporary CCTV pole must be installed with the temporary traffic signal.

Notify the Engineer when installation is complete and City forces will install the CCTV camera, Ethernet switch, wireless modem and antenna.

77-3.04 PAYMENT

Not Used

Add to *Reserved* section 77 with:

77-4 EASTERN MUNICIPAL WATER DISTRICT FACILITIES

77-4.01 GENERAL

77-4.01A Summary

Section 77-4 includes specifications for removing, relocating, and installing the following:

1. Cement-Mortar Lined and Coated (CML&C) 12-inch water pipeline
2. Air valve
3. Blow off valve
4. 3-inch plastic pipe from existing waterline to new water meter

This work includes the removal of the existing pipeline, welding of the existing pipeline, pipeline dewatering, trench shoring, associated appurtenances, pressure testing, and bacteriological testing.

Installation of the EMWD facilities includes:

1. 12-inch CML&C pipe, joints, and appurtenances
2. Insulating test connection
3. 1-inch air valve
4. Removing and disposing of the existing 12-inch CML&C pipe
5. Temporary highline water line
6. Controlling density fill
7. Performing soils and staking
8. Relocating air valve
9. Relocating blow off valve
10. Installing 3-inch plastic pipe from existing waterline to new water meter

77-4.01B Definitions

Not Used

77-4.01C Submittals

Submit to the Engineer and the Eastern Municipal Water District (EMWD) the following documents prior to performing any work on EMWD facilities:

1. A copy of materials list stating the manufacturer and model number.
2. A copy of cost breakdown.
3. Three copies of submittals on pipe used with size and cover letter.
4. Copy of Recorded Easement, if any is required.
5. Copy of Contractor's Licenses (A or C-34 only).
6. Licensed Subcontractors list.
7. Construction Schedule with start date, milestones and finish date.
8. Copy of Annual Trench Shoring/Excavation Permit.
9. Insurance certificate naming EMWD as additional insured, to include Completed Operations up to 5 years beyond the completion date, with endorsement from "CG 2010 11/85". If a later addition date of CG 2010 is issued, a CG 20 37 form must be included for Completed Operations.
10. Injury and Illness Prevention Program.
11. EN-84: Specific Operating Safety Procedures (Exhibit "B" EMWD Detailed Provisions Section 01000).
12. Full color preconstruction audio video recording on DVD of the project site with the EMWD inspector present.
13. Emergency phone numbers for the construction superintendent, foreman, and all company principals.

Allow 10 days for the Engineer and EMWD's review and authorization. If a second submittal is required, allow for 5 business days for review and authorization.

77-4.01D Quality Assurance

77-4.01D(1) General

Provide a detailed 3-year experience record showing successful completion, as a Contractor (Class A or C-34 license), of at least 3 similar projects within the last 3 years on the EMWD Detailed 3-Year Experience Record Form found in the EMWD Relocation Specifications.

77-4.01D(2) Quality Control

77-4.01D(2)(a) General

Not Used

77-4.01D(2)(b) Records

Keep and maintain, at the job site, one record set of construction drawings as specified in the General Conditions, Section F-Labor and Construction, F-08 "Reports, Record, and Data".

77-4.02 MATERIALS

Materials are specified in the EMWD Approved Materials List, dated March 26, 2020, and the following sections of the EMWD Standard Detailed Provisions:

1. Control Density Fill must comply with section 02252
2. Disinfection of all new pipes and connections must comply with AWWA section C651
3. Location wire to be installed per section 02718
4. Metal appurtenances, including restraint fitting, shall be wax taped and comply with AWWA C217

77-4.03 CONSTRUCTION

77-4.03A General

Install a complete piping system under the following sections of EMWD Standard Detailed Provisions:

1. General Safety Requirements must comply with section 01000
2. Preconstruction Audio Video Taping: Pipelines & Roadways must comply with section 01380
3. Construction Methods and Earthwork must comply with section 02201
4. Trenching, Backfilling, and Compacting must comply with section 02221
5. Control Density Fill must comply with section 02252
6. Installation of Water Pipeline must comply with section 02718
7. Installation of Copper Pipe and Tubing must comply with section 02725
8. Tape Wrap for Insulated Joints must comply with section 09810
9. Painting and Protective Coatings must comply with section 09900
10. Welded Steel Fittings must comply with section 15059
11. Steel Cylinder Water Pipe must comply with section 15061
12. Air Valves must comply with section 15136

Restore or replace all existing and new improvements that are damaged during construction of the project to a condition equal to or better than the existing improvements. These improvements include curbs, gutters, cross gutter, spandrels, driveways, sidewalks, wall, fences, sprinklers systems, lawns, shrubs trees, storm drains, traffic sign, and traffic detector loops.

Perform removal and restoration of existing improvements the permitting authority's or utility's requirements.

Arrange and pay for construction water use metering services from EMWD. Coordinate with EMWD inspector for the location of near EMWD facilities within the project limit for the availability of EMWD water. Provide necessary piping and appurtenances, including pumps, to convey water to the work site. Arrangements for water from sources other than EMWD are your sole responsibility, and no additional compensation will be allowed.

77-4.03B Trenching

Before making any excavation or trench 5 feet or more in depth, submit to the Engineer and EMWD a completed Trench Shoring Submittal Form EM-57 per section 02201 1.03D.

Backfill and compact trenches in the unpaved street to 95 percent relative compaction minimum at the end of each workday and in accordance with the jurisdictional agency's encroachment permit. Provide complete unobstructed access to each driveway at all times.

Dewater the trench excavations as necessary. Where ground water is found within the pipe trench, provide equipment including establishment of well points if necessary, power supply, materials, and labor required to adequately remove water from within trench during construction.

Perform all trench dewatering in conformance with all safety regulations.

Where rocks are encountered, remove them below grade, and backfill trench with suitable material to provide a compacted earth cushion with a thickness under the pipe. You are responsible for all permits and notices for blasting. Provide written notification to the Engineer, EMWD, and all property occupants within 500 feet of the project site a minimum of 48 hours before blasting.

Where material at the bottom of the trench is found to be unstable, soft, or spongy, remove such material and replace with suitable material.

77-4.03C Existing Facilities

77-4.03C(1) General

Do not operate any existing facilities, including opening or closing of existing pipeline valves, appurtenances, and electrical equipment. If required, coordinate activities that require operation of EMWD or other agencies facilities.

Coordinate the shutdown operation of existing systems with EMWD including EMWD's inspector and operations and maintenance personnel. Do not perform work without 2 weeks prior notice followed by 48-hours prior and 24-hour confirmation notices to EMWD. Do not proceed work without an EMWD representative present.

77-4.03C(2) Connections to Existing Pipes

Prior to shut down and tie-in work, expose existing pipeline tie-in points to determine actual location, elevation, depth, type, and outside diameter of existing pipe at each connection location to the existing system. Arrange for all tie-in and closure materials to be fabricated and on-site prior to system shut down and tie-in work. Make sure pipelines pass all required testing sequences prior to scheduling shut down and tie-in work. Only EMWD operations personnel will be allowed to operate existing valves for water system shut-downs and placing water system(s) back in operation.

Notify EMWD 1 week in advance of the planned pipeline connections and provide 48-hour and 24-hour advance confirmation of when the work will be performed.

Dewater, dechlorinate, and dispose of all water from pipeline testing/flushing activities. Ensure discharge of all water abide by the Santa Ana Regional Water Quality Control Board. Secure a permit by the SAWQCB for all discharges from testing and flushing activities.

Protect existing water pipelines from contamination during connection/tie-in procedures. Disinfect all new pipelines, pipeline connection closure materials and the existing pipeline at connection points per AWWA Section C-651.

Complete all dewatering, excavation, removal of existing pipeline, installation of new pipeline, trench backfill, disinfection, testing, and connections to existing system within 8 hours from shut-down. If work cannot be completed within the 8-hour period, a temporary pipeline may be required.

Install all piping and fittings for all connections as necessary to clear 1 foot minimum from all existing utilities or interferences and to connect to existing facilities.

77-4.04 PAYMENT

Not Used

Add to *Reserved* section 77 with:

77-5 LINE K-1 STORM DRAIN

77-5.01A GENERAL

Section 77-5 includes specifications for constructing Line K-1.

77-5.01B MATERIALS

Materials for the Line K-1 must comply with requirements shown on the project plans.

77-5.01C CONSTRUCTION

Install complete Line K-1 storm drain as specified on project plans.

77-5.01D PAYMENT

Not Used

Add to *Reserved* section 77 with:

77-6 MORENO VALLEY UTILITIES FACILITIES

77-6.01 GENERAL

77-6.01A Summary

Section 77-6 includes specifications for constructing Moreno Valley Utilities (MVU) electrical and communication facilities.

The components of the MVU electrical and communication facilities are shown on the project plans.

Installation of the MVU facilities includes:

1. Bore Under Storm Drain Lateral
2. Trench for Conduit Installation* (Dirt and Pavement)
3. Electrical Conduits
4. Communications Conduit
5. Cable
6. 200A Load Break Elbows with Test Points
7. 200A Straight Splice
8. 200A Cap with Test Point
9. 14” Cable Steps
11. 30” Cable Racks
11. Ground Assembly
12. Manhole with Traffic Rated Lid
13. Transformer
14. Transformer Pad
15. Street Lights
16. Handholes
17. Sawcut Existing AC Pavement
18. Remove and Dispose Existing AC Pavement and Base
19. Grind AC Pavement
20. AB Class II
21. AC and AC Overlay
22. Curb and Gutter
23. Sidewalk
24. Traffic Striping, Raised Pavement Markers
25. Energization

*Trench backfill up to base course in electrical conduit trenches located within the interchange project access control limit lines. Full trench backfill and restoration including base and AC elsewhere per City plans and City standard plans.

77-6.01B Definitions

Not Used

77-6.01C Submittals

MVU related work submittals shall be submitted via e-mail to Clement Jimenez at clementj@moval.org at least three weeks prior to the start of MVU related work.

77-6.01D Quality Assurance

Not Used

77-6.02 MATERIALS

Materials must comply with the City of Moreno Valley Standards and Standard Plans.

77-6.03 CONSTRUCTION

77-6.03A General

Install a complete conduit system as specified in the project plans.

Restore all disturbed areas to their pre-construction conditions. Document the pre- and post-construction conditions.

Install, inspect, and field test MVU facilities shown on the plans prior to acceptance of the electrical system. Contact George Sanchez, ENCO Utility Services, at (714) 936-7562 forty-eight (48) hours prior to all meetings, installations, and inspections.

77-6.04 PAYMENT

The payment for Bore Under Storm Drain Lateral will be made on a per unit basis as specified in the Bid Item List which shall include full compensation for furnishing all labor, material, tools, equipment, and incidentals for doing all work involved, including bore pit, receiving pit, shoring, as necessary, and boring.

The payment for Trench for Conduit Installation (Dirt and Pavement) will be made on a per linear foot basis as specified in the Bid Item List and Project Plans, which shall include full compensation for furnishing all labor, material, tools, equipment, and incidentals for doing all work involved.

The payment for trench excavation shall be considered as included in the contract price paid for the various related items of work and no additional compensation shall be allowed therefor.

The payment for temporary bituminous resurfacing, steel plates, fencing, and other related work to secure the trench shall be considered as included in the contract price paid for the various related items of underground construction. Payment for temporary and permanent striping, markings, and markers restoration shall be considered as included in the contract price paid for Traffic Striping, Pavement Markings, and Pavement Markers.

Payment for bedding and trench backfill shall be considered as included in the contract price paid for the various related items of work and no additional compensation shall be allowed therefor.

Payment for asphalt concrete and one foot of aggregate base shall be paid under a separate line item. T-Cuts will not be required within the access control limit lines as shown on the Conduit Extension Design Plans. T-Cuts will be required for work outside of the access control limit lines on Eucalyptus Avenue and a small portion of Moreno Beach Drive.

The payment for Electrical Conduits will be made on a per linear foot basis as specified in the Bid Item List and Project Plans, which shall include full compensation for furnishing all labor, material, tools, equipment, and incidentals for doing all work involved.

The payment for conduit installation of 5”, 3”, and 1-1/2” conduit, schedule 40, per the Bid Item List shall be considered as included in the contract price paid for the various related items of work and no additional compensation shall be allowed therefor.

The payment for Communications Conduit will be made on a per linear foot basis as specified in the Bid Item List, which shall include full compensation for furnishing all labor, equipment, materials and tools required to install conduits, pull boxes, trace wire, and pull rope for complete in place installation of communications conduits.

The payment for conduit installation of 4”, schedule 40, per the Bid Item List shall be considered as included in the contract price paid for the various related items of work and no additional compensation shall be allowed therefor.

The payment for existing conduit mandrelling shall be considered as included in the contract price paid for all conduits and no additional compensation shall be allowed therefor.

The payment for Cable Installation will be made on a per linear foot basis as specified in the Bid Item List which shall include full compensation for furnishing all labor, material, tools, equipment, and incidentals for doing all work involved.

The payment for 200A Load Break Elbows with Test Points will be made on a per unit basis as specified in the Bid Item List which shall include full compensation for furnishing all labor, material, tools, equipment, and incidentals for doing all work involved for the installation of four 600A elbows with 200A test points.

The payment for 200A Straight Splice will be made on a per unit basis as specified in the Bid Item List which shall include full compensation for furnishing all labor, material, tools, equipment, and incidentals for doing all work involved for the installation of one straight splice.

The payment for 200A Cap with Test Point will be made on a per unit basis as specified in the Bid Schedule which shall include full compensation for furnishing all labor, material, tools, equipment, and incidentals for doing all work involved for the installation of one 200A cap with test point.

The payment for 4-14” Cable Steps (12 Steps) and 30” Cable Rack will be made on a per unit basis as specified in the Bid Item List which shall include full compensation for furnishing all labor, material, tools, equipment, and incidentals for doing all work involved to install within an existing switch and a proposed manhole as shown on the Project Plans.

The payment for Ground Assembly will be made on a per unit basis as specified in the Bid Item List which shall include full compensation for furnishing all labor, material, tools, equipment, and incidentals for doing all work involved for the installation of two grounding assemblies.

The payment for Manhole (5’ x 10’-6” x 7’) with Traffic Rated Lid will be made on a per unit basis as specified in the Bid Item List which shall include full compensation for furnishing all labor, material, tools, equipment, and incidentals for doing all work involved. Work includes, but is not limited to, the following: excavation, shoring, installation of grounding halo, slurry, setting of the structure, compaction, and grade rings.

The payment for Transformer 25KVA will be made on a per unit basis as specified in the Bid Item List, which shall include full compensation for furnishing all labor, material, tools, equipment, and incidentals for doing all work involved. Work includes, but is not limited to, the following: procurement and setting of the transformer.

The payment for Transformer PAD (48” x 54”) will be made on a per unit basis as specified in the Bid Item List which shall include full compensation for furnishing all labor, material, tools, equipment, and incidentals for doing all work involved. Work includes, but is not limited to, the following: excavation, compaction, and setting of the transformer pad.

The payment for Street Lights (11,500 LUMENS) will be made on a per unit basis as specified in the Bid Item List which shall include full compensation for furnishing all labor, material, tools, equipment, and incidentals for doing all work involved. Work includes, but is not limited to, the following: procurement and setting of the street lights, excavation and compaction for street light foundations.

The payment for Handholes (10.5” x 17” x 24”) will be made on a per unit basis as specified in the Bid Item List, which shall include full compensation for furnishing all labor, material, tools, equipment, and incidentals for doing all work involved. Work includes, but is not limited to, the following: excavation and compaction at handhole locations, and procurement and setting of handholes.

The payment for Sawcut Existing AC Pavement will be made on a per linear foot basis as specified in the Bid Item List which shall include full compensation for furnishing all labor, materials, tools, equipment, and incidentals, and for doing all work involved in saw-cutting existing asphalt concrete pavement and no additional compensation shall be allowed therefor.

The payment for Remove and Dispose Existing of AC Pavement and Base will be made on a per square foot basis as specified in the Bid Item List which shall include full compensation for furnishing all labor, materials, tools, equipment, and incidentals, and for doing all work involved in removing and disposing of the material removed, surfacing not cold milled, quarrying and ripping, loading, disposing of surplus materials, stockpiling and hauling it to its final location and no additional compensation shall be allowed therefor.

The payment for Grind AC Pavement will be made on a per square foot basis as specified in the Bid Item List which shall include full compensation for furnishing all labor, materials, tools, equipment, and

incidentals, and for doing all work involved in cold milling asphalt concrete pavement and disposing of the material removed, and no additional compensation shall be allowed therefor.

The payment for Aggregate Base Class II (12”) will be made on a per ton basis as specified in the Bid Item List which shall include full compensation for furnishing all labor, materials, tools, equipment and incidentals, and for doing all the work involved in constructing crushed aggregate base complete in place and no additional compensation will be allowed therefor.

The payment for AC (6”) and AC Overlay (0.15’) will be made on a per ton basis as specified in the Bid Item List which shall include full compensation for furnishing all labor, materials, tools, equipment and incidentals, including application of tack coat, compaction, removal of dirt material, removal of excess/unused AC materials and haul away, and no additional compensation will be allowed therefor.

The payment for Curb and Gutter (8”) will be made on a per linear foot basis as specified in the Bid Item List, which shall include full compensation for furnishing all labor, materials, tools, equipment, and incidentals, and for doing all the work involved in saw-cutting, removing, and constructing integral PCC curb and gutter.

The payment for the 8” PCC integral curb and gutter that fail to meet the cross slope, height and slope requirements will be withheld until compliance is met. Payment for asphalt concrete pavement repair patch shall be considered included in the bid cost for this item.

The payment for Sidewalk will be made on a per square foot basis as specified in the Bid Item List, which shall include full compensation for furnishing all labor, materials, tools, equipment, and incidentals, and for doing all the work involved in saw-cutting, removing, and constructing PCC sidewalk. Payment for sidewalk that fails to meet the cross slope and slope requirements will be withheld until compliance is met.

The payment for Traffic Striping, Raised Pavement Markers will be made on a lump sum basis as specified in the Bid Item List which shall include full compensation for furnishing all labor, materials, tools, equipment, and incidentals, and for doing all the work involved in applying traffic striping, pavement legends, pavement markers, street signs and other items specified herein and no additional compensation will be allowed therefor.

Payment for Energization Newly Installed System will be made on a lump sum basis as specified in the Bid Item List which shall include full compensation for furnishing all labor, material, tools, equipment, and incidentals for doing all work involved. Electrical infrastructure installation is not 100% complete until all cable and position phasing has been marked properly, phasing tested, and energized. MVU will provide a switching procedure for the purpose of energization, switching and testing labor and equipment to be supplied by contractor.

^^

DIVISION IX TRAFFIC CONTROL DEVICES

82 SIGNS AND MARKERS

Add to section 82-2.04:

The payment quantity for Type XI retroreflective sheeting for any type of sign panel is the area of the panel determined from the dimensions shown.

Payment for Type XI retroreflective sheeting is not included in the payment for furnishing any type of sign panel.

Add to the end of section 82-3.02

82-3.02F Enhanced Conspicuity Retroreflective Treatment Sign Posts

Attach a minimum two-inch wide enhanced conspicuity retroreflective treatment (ASTM sheeting Type XI attached to aluminum or plastic substrate) on wood, square perforated metal or round metal sign posts for pedestrian, bicycle and school zone signs. Attach treatment on the side of sign posts facing the traffic. If the sign has a breakaway feature, the bottom of the sign post, from the ground surface to six inches above the breakaway feature, must not be covered with the treatment. Do not attach treatment to signs installed by the strap and saddle bracket method on electroliers, sign structure posts and traffic signal standards.

On wood or square perforated metal sign posts (any size), treatment must be the width of post and must be firmly secured to the sign post by using threaded fasteners or drive rivets.

On round metal sign posts with nominal diameter size two inches or more, treatment must be the width of the outside diameter of the post and must be firmly secure using threaded fasteners.

Color of the treatment must match the color of the predominant background color of the sign panel.

Add to the end of section 82-3.04

Payment for aluminum or plastic substrate for enhanced conspicuity retroreflective treatment (ASTM sheeting Type XI) on wood, square perforated metal or round metal sign posts is included in the payment for furnishing pedestrian, bicycle and school zone sign panels.

The payment quantity for Type XI retroreflective sheeting for enhanced conspicuity retroreflective treatment is the area of the panel determined from the dimensions shown.

Payment for Type XI retroreflective sheeting for enhanced conspicuity retroreflective treatment is not included in the payment for furnishing any type of sign panel.

Replace Reserved in section 82-6 with:

82-6 FIBERGLASS CITY EMBLEM PANEL

82-6.01 GENERAL

82-6.01A Summary

Section 82-6.01 includes specifications for constructing fiberglass city emblem panel on pilasters at the Moreno Beach Drive OC (56-0845) to the dimensions shown on the plans.

82-6.01B Definitions

Not Used

82-6.01C Submittals

Submit manufacturer's descriptive data, a list of materials to be used, and installation instructions.

Submit shop drawings for fiberglass city emblem panels with supporting details for anchorage to pilasters.

Submit 6 copies of drawings. Include the following:

1. Your name, address, and telephone and fax numbers.
2. Installation sequence
3. Drawings must include plans, elevations, sections and details for all work in this section including anchorage, mounting and installation.

Shop drawings must be submitted 30 days in advance of the start of the affected work to allow time for review by the Engineer and correction by the Contractor of the drawings without delaying the work. No panels are to be fabricated before shop drawings and a sample for each panel color have been reviewed by the Engineer.

82-6.01D Quality Assurance

A sample fiberglass city emblem must be constructed prior to fabricating or placing the permanent fiberglass city emblems. The sample fiberglass city emblem must be constructed of the same materials as are proposed for the permanent work and must be finished as specified for the permanent work. The sample fiberglass city emblem must be actual size (48" diameter) and must be successfully completed at a location approved by the Engineer before beginning work on permanent fiberglass city emblem. If ordered by the Engineer, additional sample fiberglass city emblems must be constructed and finished until the specified pattern, color, and finish are obtained, as determined by the Engineer.

The sample fiberglass city emblem approved by the Engineer must be used as the standard of comparison in determining acceptability of fiberglass city emblems.

82-6.02 MATERIALS

The fiberglass-reinforced plastic panel must:

1. Comply with ASTM D3841
2. Be weather-resistant, Grade II, thermoset polyester laminate

The plastic must:

1. Be acrylic modified and UV stabilized for outdoor weatherability.
2. Contain additives designed to suppress fire ignition and flame propagation. When tested under ASTM D635, the extent of burning must not exceed 1 inch.

The panel must be cut from a single piece of laminate. Mounting holes must be predrilled. Predrilled mounting holes, panel edges, and the front and back surfaces of the panel must be true and smooth. The panel surface must not have visible cracks, pinholes, foreign inclusions, warping, and wrinkles that might affect performance.

The panel must:

1. Be flat to within ±1/32 in/ft of the panel dimensions as measured by a straightedge placed in any direction across the plane of the panel
2. Be within ±1/8 inch of the dimensions shown

The fiberglass city emblem panel colors must closely resemble colors of the fiberglass city emblem panels mounted on the existing bridge pilasters at the Nason Street Overcrossing (Bridge Number 56-0844).

82-6.03 CONSTRUCTION

Fiberglass city emblem panels and any packaging materials must be delivered to the job site and properly protected from possible damage during shipping and storage at the construction site.

Materials must be stored and handled in such a manner to prevent damage or contamination by water, freezing, or foreign matter.

Any panel not meeting the requirements of this specification must be rejected.

82-6.04 PAYMENT

Payment for fiberglass city emblem is included in the payment for Structural Concrete, Bridge.

^^

83 RAILINGS AND BARRIERS

Replace *Reserved* in section 83-2.01B with:

83-2.01B(1) General

83-2.01B(1)(a) Summary

Section 83-2.01B includes specifications for constructing vegetation control around railing and barrier posts.

Constructing minor concrete vegetation control includes clearing and excavation.

83-2.01B(1)(b) Definitions

Not Used

83-2.01B(1)(c) Submittals

Submit a mix design for the minor concrete to be used for vegetation control. The mix design must show proportions of:

1. Coarse aggregate
2. Fine aggregate
3. Cementitious material
4. Reinforcing fiber
5. Water

Include compressive strength test results with the mix design.

Submit a certificate of compliance for the crumb rubber aggregate, if used. Include the quantity in pounds of crumb rubber.

83-2.01B(1)(d) Quality Assurance

Not Used

83-2.01B(2) Materials

83-2.01B(2)(a) General

Not Used

83-2.01B(2)(b) Minor Concrete

83-2.01B(2)(b)(i) General

Concrete for vegetation control must comply with the specifications for minor concrete, except the concrete:

1. Must include reinforcing fibers
2. May include crumb rubber aggregate
3. Must contain:
   3.1. At least 505 pounds of cementitious material per cubic yard, if crumb rubber aggregate is used
   3.2. At least 400 pounds of cementitious material per cubic yard, if crumb rubber aggregate is not used
4. Must have a maximum aggregate size of 3/8 inch

All ingredients must be added at the concrete plant before delivery to the job site.

You may use volumetric proportioning complying with ASTM C685/C685M or as specified.

The minor concrete must have a 28-day compressive strength from 1,400 to 2,500 psi.

83-2.01B(2)(b)(ii) Crumb Rubber Aggregate

Crumb rubber aggregate must consist of ground or granulated scrap tire rubber from automobile and truck tires. Do not use tire buffings.

Crumb rubber aggregate must be ground and granulated at ambient temperature.

The crumb rubber aggregate gradation must comply with the requirements shown in the following table:

Gradation Requirements

Sieve size	Percentage passing
1/2"	100
3/8"	90–100
1/4"	35–45
No. 4	5–15
No. 8	0–5
No. 16	0

Crumb rubber aggregate must not contain more than 0.01 percent of wire by mass and must be free of oils and volatile organic compounds.

Do not commingle crumb rubber from different sources.

The crumb rubber aggregate must be 3.5 ± 0.5 percent by weight of the concrete.

83-2.01B(2)(b)(iii) Reinforcing Fibers

Reinforcing fibers for minor concrete must be:

1. Manufactured specifically for use as concrete reinforcement from one of the following:
   1.1. Polypropylene, polyethylene, or a combination of both.
   1.2. Copolymer of polypropylene and polyethylene.
2. Blended ratio from 4 to 5.67 parts by weight of macro synthetic fibers to 1 part by weight of micro synthetic fibers. Synthetic fibers must be:
   2.1. Nonfibrillated macro fibers with individual fiber lengths less than 2 ± 1/2 inches.
   2.2. Fibrillated or monofilament micro fibers of various lengths and thicknesses.
3. Supplied in sealed, degradable bags of appropriate size for adding whole bags to concrete batches.
4. From a commercial source.

The reinforcing fiber content of the minor concrete must be from 5 to 6 lb/cu yd.

83-2.01B(2)(b)(iv) Coloring Agent

Not Used

83-2.01B(2)(c) Block-Out Material

The block-out material must be a commercially available expanded polystyrene foam with a compressive strength of 13 ± 5 psi at 10 percent deformation when tested under ASTM D1621.

If authorized, you may substitute an alternative block-out material that complies with the compressive strength requirements of the expanded polystyrene foam.

83-2.01B(2)(d) Backfill Material

Backfill material must be Class 2 aggregate base complying with section 26.

83-2.01B(3) Construction

83-2.01B(3)(a) General

Not Used

83-2.01B(3)(b) Clearing

Clear areas to receive vegetation control of vegetation, trash, and debris. Dispose of the removed material.

83-2.01B(3)(c) Earthwork

Excavate or backfill areas to receive vegetation control.

If the vegetation control abuts the existing surfacing and the edge of the existing surfacing is not on a neat line, cut the surfacing on a neat line to a minimum depth of 2 inches before removing the surfacing.

Perform grading so that the finished elevation of the vegetation control maintains the existing or planned flow lines, slope gradients, contours, and existing surfacing.

Grade the areas to receive vegetation control to a smooth, uniform surface and compact to a relative compaction of at least 90 percent.

83-2.01B(3)(d) Block Outs

For block-out material supplied in more than 1 piece, tape the pieces together to make a smooth surface on the top and sides.

Ensure that the block-out material does not move during concrete placement.

83-2.01B(3)(e) Forming

Forming must comply with section 73-1.03C.

Leave forms in place for at least 12 hours after surface finishing.

83-2.01B(3)(f) Minor Concrete

Strike off and compact the minor concrete until a layer of mortar is brought to the surface. Match the finished grade to the adjacent section of vegetation control, pavement, shoulder, or existing grade.

Construct contraction joints by scoring concrete with a grooving tool and rounding corners with an edger tool.

If the curing compound method is used for colored concrete, use curing compound no. 6.

83-2.01B(3)(g) Backfill Material

Backfill material required for vegetation control under existing guardrail or barrier is change order work. Excavate or backfill areas to receive vegetation control.

83-2.01B(4) Payment

Not Used

Replace *Reserved* in section 83-2.02C(3) with:

The offset from the face of the Type WB-31 transition railing to the hinge point must be at least 3'-6".

The offset from the face of the adjacent midwest guardrail system to the hinge point must be transitioned from the offset at the Type WB-31 transition railing to 4'-0" using a ratio of 6:1.

Replace section 83-2.04B with:

83-2.04B Alternative In-line Terminal Systems

83-2.04B(1) General

83-2.04B(1)(a) Summary

Section 83-2.04B includes specifications for constructing alternative in-line terminal systems.

83-2.04B(1)(b) Definitions

Not Used

83-2.04B(1)(c) Submittals

Submit a certificate of compliance for alternative in-line terminal systems.

83-2.04B(1)(d) Quality Assurance

For each model of alternative in-line terminal system being installed, obtain the manufacturer's check list for the assembly and installation of the alternative in-line terminal systems from the manufacturer's representative or distributor. Notify the Engineer of the alternative in-line terminal systems to be installed at each location before starting installation activities. Complete, sign, and date the check list for each installed in-line terminal system and submit a copy of the completed and signed check list for each installed location, and include the following:

1. Contract number
2. Name of installation Contractor
3. Flare offset used in layout
4. Date of installation

5. Location on the project by post mile, and by station if stationing shown on plans
6. Name and signature of individual completing the checklist.

The Engineer signs and dates the completed check lists, verifying the in-line terminal system at each location was assembled and installed under the manufacturer's instructions and as described.

Use personnel trained by the manufacturer to install in-line terminal systems. A record of training provided by the manufacturer may be requested by the Engineer at any time.

83-2.04B(2) Materials

Alternative in-line terminal systems must be one of the following or a Department-authorized equal:

1. Type SoftStop terminal systems must be SoftStop End Terminal System manufactured by Trinity Highway Products, LLC, and must include the connection components. Type SoftStop terminal system - Type SoftStop terminal system must be a SoftStop terminal with a System length of 50'-9 1/2" for test level 3, manufactured by Trinity Highway Products, LLC, and must include items detailed for SoftStop terminal system, as shown. The SoftStop terminal can be obtained from the manufacturer:

Address	Telephone no.
TRINITY HIGHWAY PRODUCTS LLC PO BOX 99 CENTERVILLE UT 84012	(800) 772-7976

2. Type MSKT - Type MSKT terminal system must be a 31" MSKT Guard Rail End Terminal with a system length of 50'-0" as manufactured by Road Systems, Inc., located in Big Spring, Texas, and must include items detailed for Type MSKT terminal system shown on the plans. The MSKT Guard Rail End Terminal can be obtained from the distributor:

Address	Telephone no.
UNIVERSAL INDUSTRIAL SALES PO BOX 699 PLEASANT GROVE UT 84062	(801) 785-0505
GREGORY INDUSTRIES INC 4100 13TH ST SW CANTON OH 44708	(330) 477-4800

3. Type MAX-Tension Tangent Guardrail End Treatment by Barrier Systems, Inc. is a tangent, re-directive gating guardrail terminal. The MAX-Tension has a length of 55'-1/2", and can be flared for an offset of 0 to 2 feet at the head. The MAX-Tension terminal can be obtained from the distributor:

Address	Telephone no.
STATEWIDE SAFETY AND SIGNS INC 130 GROBRIC COURT FAIRFIELD CA 94533	(800) 770-2644

83-2.04B(3) Construction

Identify each terminal system by painting the type of terminal system in 2-inch-high, neat, black letters and figures on the backside of the rail element between system posts number 4 and 5. Paint must be metallic acrylic resin type spray paint. Before applying terminal system identification, the surface to receive terminal system identification must be free of all dirt, grease, oil, salt, or other contaminants by washing the surface with detergent or other suitable cleaner. Rinse thoroughly with fresh water and allow to fully dry.

Install Type SoftStop terminal system under the manufacturer's installation instructions. For Type SoftStop terminal system, use W6 x 8.5 steel yielding terminal posts for Posts 1 and 2 and standard W6 x

8.5 steel posts for the other posts. Drive all posts or place them in drilled holes. Backfill the space around the posts with selected earth that is free of rock. Moisten and thoroughly compact each layer. For the terminal with a system length of 50'-9 1/2" or system length of 38'-3 1/2", all blocks must be wood or plastic and must be 8 or 12 inches deep.

Install Type MSKT terminal system under the manufacturer's installation instructions. For Type MSKT terminal system, install a W6x15 at lower section Post 1 with a soil plate attached and a 6 by 6 by 1/8 inches tube section at upper section Post 1. Install a W6x9 or W6x8.5 post assembly top and post assembly bottom at Post 2. Install W6x9 or W6x8.5 at Posts 3 through 8. Attach a 9'-4 1/2" W-beam MGS rail section to Post 3. Use 8-inch blocks. The posts must be, at your option, driven with or without pilot holes, or placed in drilled holes. Do not pound on the side plates when installing lower post #1 and lower post #2. Space around the posts must be backfilled with selected earth, free of rock, placed in layers approximately 4 inches thick and each layer must be moistened and thoroughly compacted.

Install Type MAX-Tension terminal system under the manufacturer's installation instructions. Use 8- or 12-inch wood or composite blocks. Install W6x8.5 or W6x9 at post positions after Post 1. Backfill the space around the posts with selected earth that is free of rock. The posts must be, at your option, driven with or without pilot holes, or placed in drilled holes. Space around the posts must be backfilled with selected earth, free of rock, placed in layers approximately 4 inches thick and each layer must be moistened and thoroughly compacted.

83-2.04B(4) Payment

Not Used

Replace *Reserved* in section 83-2.10 with:

83-2.10 PICKET RAILING FENCE

83-2.10A General

Section 83-2.10 includes specifications for constructing picket railing fence.

83-2.10B Materials

The materials for picket railing fence components must comply with section 83-2.06B.

Chain link fabric for the picket railing fence at bridge no. 56-0845 must be 9 gauge and must comply with AASHTO M 181, Type IV, Class B. The color of the vinyl coating must be black.

83-2.10C Construction

The construction for picket railing fence must comply with section 83-2.06C.

83-2.10D Payment

Not Used

Add to section 83-3.01A:

Fractured rib texture must comply with section 51-1.03G.

^^

84 MARKINGS

Add to section 84-2.01C of the RSS for section 84-2:

Submit surface frictional properties test results for each lot or batch of preformed thermoplastic.

Submit the manufacturer’s material data for the surface preparation adhesive before it is applied to precondition the pavement surface.

Add to section 84-2.01D(2) of the RSS for section 84-2:

Within 30 days of application, test the skid resistance of the preformed thermoplastic pavement markings under ASTM E303.

Replace section 84-2.02H of the RSS for section 84-2 with:

84-2.02H Preformed Thermoplastic Pavement Markings

Preformed thermoplastic pavement markings must:

1. Conform to AASHTO designation M249, except it must be supplied in a preform state and may be a color other than white or yellow
2. Be on the Authorized Material List for signing and delineation materials
3. Be free from lead, chromium, arsenic, cadmium, barium, and other toxic metals
4. Have glass beads embedded to depth of 60 percent of their diameters
5. Have resealing characteristics and be capable of fusing with itself
6. Be resistant to sunlight, water, salt, or adverse weather conditions and must be impervious to motor fuels, lubricants, hydraulic fluids, oil, and gasoline

The application of preformed thermoplastic pavement markings must not damage the underlying pavement.

Preformed thermoplastic pavement markings must be sufficiently flexible and cohesive at temperatures above 50 degree F and must not fracture prior to application.

Preformed thermoplastic pavement markings must have a minimum thickness of 90 mils.

Preformed thermoplastic pavement markings must affix to all types of pavements and must not lift, shift, smear, spread, flow, or tear by traffic.

pieces in each segment must be factory assembled with a compatible material and interconnected.

Add to section 84-2.03B(1) of the RSS for section 84-2:

The retroreflectivity of applied preformed thermoplastic pavement markings must comply with the requirements shown in the following table:

Preformed Thermoplastic Retroreflectivity Requirements

Traffic stripe material	White (min, mcd $^{m-2}$ lx^{-1})	Yellow (min, mcd $^{m-2}$ lx^{-1})	Other colors (min, mcd $^{m-2}$ lx^{-1})
Preformed thermoplastic	250	125	125

The applied preformed thermoplastic pavement marking must have a skid resistance value of 60.

Add to section 84-2.03B(2) of the RSS for section 84-2:

84-2.03B(2)(e) Preformed Thermoplastic Pavement Markings

After cleaning the surfaces, apply sealer or primer as recommended by the manufacturer.

Apply the preformed thermoplastic under the manufacturer's instructions. You may use a surface preparation adhesive to precondition the pavement surface.

Preformed thermoplastic pavement markings must be ready for traffic immediately after application.

Add to section 84-2.03B(7) of the RSS for section 84-2:

Contrast for preformed thermoplastic pavement markings consists of a black border with a width from 2 to 4 inches. The borders must be nonreflective film bonded to the outer edge of the marking.

Replace the 2nd paragraph of section 84-2.03B(2)(b) the RSS for section 84-2 with:

Apply extruded thermoplastic for traffic stripes in a single pass at a rate of at least 0.510 lb/ft of 6-inch-wide solid stripe. The applied thermoplastic must be at least 0.100 inch thick.

Replace *Reserved* in section 84-9.03B of the RSS with:

Residue from the removal of painted or thermoplastic traffic stripes and pavement markings contains lead from the paint or thermoplastic. The average lead concentrations are less than 1,000 mg/kg total lead and 5 mg/L soluble lead. This residue:

1. Is a nonhazardous waste
2. Does not contain heavy metals in concentrations exceeding the thresholds established by the Health and Safety Code and 22 CA Code of Regs
3. Is not regulated under the Federal Resource Conservation and Recovery Act (RCRA), 42 USC § 6901 et seq.

Management of this material exposes workers to health hazards that must be addressed in your lead compliance plan.

^^

DIVISION X ELECTRICAL WORK

86 GENERAL

Add to the end of section 86-1.02F(2)(a):

Conductors size no. 8 or larger must be aluminum except for bonding jumpers and equipment grounding conductors.

Replace the RSS for the 2nd paragraph of section 86-1.02F(2)(c)(ii) with:

An equipment grounding conductor must be bare.

Replace the 1st sentence in the 15th paragraph of section 86-1.02P(2) with: The interior of the enclosure must accept the plug in circuit breakers. The circuit breakers must be mounted on energized bus clips and vertically with the up position of the handle being the *ON* position.

Add to section 86-1.02Q(3):

The Data Node and CCTV cabinet components include:1. Multiple AC outlet strip

The multiple AC outlet strip must:

1. Be 19 inch, rack mountable
2. Have a minimum of 6 receptacle outlets
3. Be rated for 15 A, 125 V(ac)
4. Have internal 12 A, 125 V(ac) circuit breaker
5. Be rated for 36,000 A surge current protection from Hot to Neutral
6. Have a UL 1449 rating for a minimum 400 V
7. Have a minimum 6-foot-long cord

Data Node and CCTV cabinets must include Housing 1B, Mounting cage, PDA 3 and input panel 3. Police panel, detector input file and C1 harness are not required.

Add to the list in the 2nd paragraph of section 86-1.02R(4):

4. Be made of metal

^^

87 ELECTRICAL SYSTEMS

Replace the 21st paragraph of section 87-1.03A with:

The Department places identification characters on the electrical equipment.

Add between the 22nd and 23rd paragraphs of section 87-1.03A:

Where a Type A or a Type B loop detector is shown, a Type E loop detector may be substituted. Use only one type loop detector per system.

Add to the beginning of section 87-1.03B(3)(a):

Use Type 3 schedule 80 conduit for underground installation.

Replace the 1st paragraph of section 87-1.03F(2)(c)(ii) of the RSS for section 87-1.03F(2) with:

Install a Type B loop detector lead-in cable in conduit.

Replace the paragraph of the RSS for the 1st paragraph of section 87-1.03F(3)(c)(ii) with:

Use a Type 2 loop wire. Use only Type 2 loop wire for Type E and F loop detectors.

Replace the 2nd paragraph of section 87-1.03H(2) with:

Use Method B to insulate a splice.

Add to the end of section 87-1.03L(2)(b):

Install a Type III service equipment enclosure for irrigation controllers “A” and “B”.

Install a metered 120/240 V(ac), single-phase service with service disconnects in a NEMA 3R enclosure and surface mounted on a pole for irrigation controllers “A” and “B”. You may locate the service disconnects and metering equipment in a common enclosure if authorized by the service utility.

Add to the end of section 87-1.03T:

A manufacturer's representative must program the accessible pedestrian signals at the following intersections:

1. Intersection of Route 60 EB ramps and Moreno Beach Drive
2. Intersection of Route 60 WB ramps and Moreno Beach Drive

When the extended pushbutton press is used, program the signals with messages for each street as follows:

1. During the pedestrian clearance interval, the message heard must be *Wait to Cross* Moreno Beach Drive. *Wait*.
2. During the pedestrian clearance interval, the message heard must be *Wait to Cross* Route 60 EB ramps. *Wait*.
3. During the pedestrian clearance interval, the message heard must be *Wait to Cross* Route 60 WB ramps. *Wait*.

Add between the 1st and 2nd sentences in the 2nd paragraph of section 87-1.03V(2):

Saw the slots to allow a minimum of 2 inches of sealant above the top of the uppermost loop wire in the slot.

Add between the 10th and 11th paragraphs of section 87-1.03V(2):

Use hot-melt rubberized sealant to fill slots.

87-9 2070 CARD UPGRADE

87-9.01 General

87-9.01A Summary

Section 87-9 includes specifications for furnishing and installing the 2070 Card Upgrade.

The 2070 Card Upgrade includes:

1. 2070-1C CPU Module
2. 170 Emulator Application

87-9.01B Definitions

Reserved

87-9.01C Submittals

Submit a draft copy of the material documentation for review and approval. The Engineer will review and approve or reject the submittals within 2 weeks of receipt.

87-9.01D Quality Assurance

87-9.01D(1) General

Not Used.

87-9.01E Quality Control

87-9.01E(1) General

Not Used.

87-9.01E(1)(a) Data Integration Testing

You must test all material, equipment, and cable after installation.You must supply all test equipment required.

2070-1C Modules be delivered to the TMC for configuration, a minimum of 2 weeks prior to installation in the field.
You must configure all other equipment prior to testing or installation in the field.
The following network information will be supplied:

1. IP addresses
2. Mask
3. Gateway
4. Replacement Administrative Password

You must submit an installation and test plan which details the method of installation and site testing for all material, equipment, and cable and the associated schedule of activities. Two copies of the installation and test plan must be submitted for approval, at least 2 weeks before proposed testing dates.

The equipment and hardware must be installed as shown and described. Tests and inspections must include:

1. Visual inspection for damaged or incorrect installation.
2. Measurement of parameters and operating conditions.

These tests must be performed in accordance with the approved installation and test plan.
You must notify the Engineer of your intent to proceed with installation and testing 48 hours before commencement of each test.

87-9.01E(1)(b) Physical Inspection

You must provide documentation to prove delivery of all material, equipment, cable and documentation. If any material or documentation is outstanding or have been replaced under pre-acceptance warranty a physical inspection and documentation must be provided for this material. The physical inspection must consist of inspecting all installed material to ensure that workmanship satisfies the specified requirements.

87-9.01E(1)(c) Data Link Testing

To verify all of the communication equipment is properly connected and responding to the assigned IP addresses, the data link testing for each device consists of the following steps:

1. From the Inland Empire Transportation Management Center (TMC), with the communication system functioning under normal conditions, each device must respond as follows:

    A. The device must respond correctly to an Internet Control Message Protocol (ICMP) echo requests from the District TMC.

    B. The device must be turned OFF. An ICMP echo request from the District TMC must then be sent and the device must not be responsive.

    C. The device must then be turned ON. An ICMP echo request from the District TMC must be then be sent and the device must be responsive. At least five consecutive responses without packet loss are required to be considered a successful test.

Verify that each device responds and record the response time for each request.

The Inland Empire TMC is located at:
13892 Victoria Street
Fontana, CA 92336

87-9.01E(1)(d) Acceptance Testing

Acceptance testing includes the preparation of an acceptance test plan, conducting acceptance tests and subsequent retests, and documentation of the results.

Final acceptance tests must be conducted after the site test results have been reviewed and accepted. These tests include the complete system in normal operations.

The acceptance test plan must detail all tests to be performed, the test results which are expected and the test schedule. The acceptance test plan will include the following major tests and acceptance categories:

1. Successful acceptance of Subsystem testing
2. Data link tests after connecting the system.
3. Functional tests after connecting the system.

All acceptance test results must be fully documented and such documentation provided as a condition of acceptance.

87-9.01E(1)(e) Final Acceptance

The system will not be accepted until all of the following conditions have been met as follows:

1. Physical, and functional acceptance tests have been completed and the results are approved.

2. All documentation has been completed and submitted.
3. All connections that were changed to perform acceptance tests are restored and tested to form a fully operational system.

87-9.02 MATERIALS

87-9.02A General

Not Used

87-9.02B 2070-1C CPU Module

The 2070-1C CPU Module must comply the latest Caltrans Transportation Electrical Equipment Specifications (Section 9.2.5) and with the following additional requirements:

Parameter	Requirements
RAM Memory	Minimum 128 MB DRAM or equivalent volatile memory for application and OS program execution
Flash Memory	Minimum 64 MB NOR flash or equivalent for storage of OS Software and user application
Static Memory	Minimum 2MB SRAM memory for non-volatile parameter storage
Floating Point Processor (FPU)	Hardware FPU required
Security Chip	Independent security chip capable of securely storing private keys
Operating System (OS) Version	Linux 3.14 version kernel or newer
Supported OS Features	1. SCHED_DEADLINE (real time deadline scheduler) 2. Open Package management (opkg) package manager

The 2070-1C Module must be compatible with the 170 Emulator application and REV 8 Ramp Metering software used in other locations with in Caltrans District 8.

87-9.02C 170 Emulator Application

The 170 Emulator Application must comply with the following requirements:

Parameter	Requirements
Management Interface	Web page and 2070 control panel
Configurable Settings	TCP/IP Network settings (2 port) NTP Time settings 170 firmware application 170 to 2070 Comport mapping 170 comport to TCP/IP port mapping Comport settings 170 processor board dip switch emulation Remote Reboot
Security Features	SSL encrypted Web page Management interface Password protected management interface (local and remote)
Upgradability	Emulator via USB port or remotely via Ethernet 170 Firmware via USB port or remotely via Ethernet
Compatiblity	Linux 3.14 version kernel or newer 2070 1C Module (specified 87-15) RWIS Central Ramp Meter Management System REV 8 170 Ramp Metering firmware
Operating System (OS) Version	Runs on Linux 3.14 version kernel or newer
	1. SCHED_DEADLINE (real time deadline scheduler) 2. Open Package management (opkg) package manager

The 170 Emulator application used in District 8 is supported by:

Intelight
1941 1st Ave South, Suite 3C
Seattle, Washington 98134

The REV 8 Ramp Metering software used in District 8 is supported by:

Astart Technologies
1509 Hollow Ct.,
San Diego, CA 92019
papowell@astart.com

87-9.03 CONSTRUCTION

87-9.03A General

Not Used

Remove the existing CPU Module from the Model 2070E controller and return it to:

District 8 – Inland Empire TMC
13892 Victoria Street
Fontana, CA 92336

Provide software licenses and 2070-1C Modules to the Caltrans Ramp Metering and Systems group two weeks prior to installation for configuration at:

District 8 – Inland Empire TMC
13892 Victoria Street
Fontana, CA 92336

After configuration, install the 2070 Card Upgrade in the Model 2070E controller.

87-9.04 PAYMENT

Not Used

87-10 4G LTE MODEM ASSEMBLY

87-10.01 General

87-10.01A Summary

Section 87-10.01 includes specifications for furnishing and installing the 4G LTE Modem Assembly (4G LTE).

The 4G LTE modem is used for wireless communications between field elements and the TMC.

87-10.01B Definitions

CLI: A Command-Line Interface is a means of interaction with a computer program where the user issues commands to a program in the form of successive lines of text.

DHCP: The Dynamic Host Configuration Protocol is a network protocol to configure network devices so that they can communicate on an IP network.

DNS: Domain Name System/Server is an Internet service that translates domain names into IP addresses.

IP: Internet Protocol, a communications protocol for computers connected to a network specifying the format for addresses and units of transmitted data.

POE+ / POE: Power Over Ethernet IEEE 802.3at and IEEE 802.3af standards provides power on a standard Category 5 cable.

SNMP: Simple Network Management Protocol is an Internet-standard protocol for managing devices on IP networks.

TIA: Telecommunications Industry Association. The standard address commercial building cabling for telecommunications products and services.

87-10.01C Submittals

Submit a draft copy of all documentation for review and approval before production of documentation. The Engineer will review and approve or reject the draft documentation within 2 weeks of receipt.

Submit two copies of all final documents. The copies must be 8.5 inches by 11 inches and bound in three-ring, hard-covered binders, complete with dividers.

Documentation must consist of the following types of manuals and drawings and must include the information described.

1. Configuration of Hardware and Software Documentation
   1.1. Provide proper documentation for all configurations of hardware and software.

2. Test Results
   2.1. The test result section of the operations and maintenance must include a copy of the results for all the tests that you have conducted. Detailed test requirements are listed under the Quality Control section.

Submit the specifications of all cable assemblies, including connectors with strain relief back shells, and EIRP of wireless system, as part of the shop drawings for review and approval.

87-10.01D Quality Assurance

87-10.01D(1) General

Not Used.

87-10.01D(2) Warranty

Furnish a 5 year replacement warranty from the manufacturer against any defects in materials or workmanship. The effective date of the warranty is the date of contract acceptance. Replacement parts must arrive within 5 business days after receipt of the failed parts. The Department does not pay for replacement parts. Deliver replacement parts to:

District 8 TMC
13892 Victoria Street
Fontana, CA 92336

87-10.01D(3) Quality Control

87-10.01D(3)(a) General

Not Used.

87-10.01D(3)(b) Data Integration Testing

You must test all material, equipment, and cable after installation. These tests must comply with the "Performance Testing" sub-sections for each individual item where applicable.

You must supply all test equipment required.

Switches and routing equipment must be delivered to the TMC for configuration, a minimum of 2 weeks prior to installation in the field.
You must configure all other equipment prior to testing or installation in the field.
The following network information will be supplied:

1. IP addresses
2. Mask
3. Gateway
4. Replacement Administrative Password
5. SNMP Community Strings
6. Wireless Security Settings (when applicable)

You must submit an installation and test plan which details the method of installation and site testing for all material, equipment, and cable and the associated schedule of activities. Two copies of the installation and test plan must be submitted for approval, at least 2 weeks before proposed testing dates.

The equipment and hardware must be installed as shown and described. Tests and inspections must include:

1. Visual inspection for damaged or incorrect installation.
2. Measurement of parameters and operating conditions.

These tests must be performed in accordance with the approved installation and test plan.
You must notify the Engineer of your intent to proceed with installation and testing 48 hours before commencement of each test.

87-10.01D(3)(c) Physical Inspection

You must provide documentation to prove delivery of all material, equipment, cable and documentation. If any material or documentation is outstanding or have been replaced under pre-acceptance warranty a physical inspection and documentation must be provided for this material. The physical inspection must consist of inspecting all installed material to ensure that workmanship satisfies the specified requirements.

87-10.01D(3)(d) Data Link Testing

To verify all of the communication equipment is properly connected and responding to the assigned IP addresses, the acceptance testing for each device consists of the following steps:

2. From the Inland Empire Transportation Management Center (TMC), with the communication system functioning under normal conditions, each device must respond as follows:

    D. The device must respond correctly to an Internet Control Message Protocol (ICMP) echo requests from the District TMC.

    E. The device must be turned OFF. An ICMP echo request from the District TMC must then be sent and the device must not be responsive.

    F. The device must then be turned ON. An ICMP echo request from the District TMC must be then be sent and the device must be responsive. At least five consecutive responses without packet loss are required to be considered a successful test.

Verify that each device responds and record the response time for each request.

The Inland Empire TMC is located at:
13892 Victoria Street
Fontana, CA 92336

87-10.01D(3)(e) Acceptance Testing

Acceptance testing includes the preparation of an acceptance test plan, conducting acceptance tests and subsequent retests, and documentation of the results.

Final acceptance tests must be conducted after the site test results have been reviewed and accepted. These tests include the complete system in normal operations.

The acceptance test plan must detail all tests to be performed, the test results which are expected and the test schedule. The acceptance test plan will include the following major tests and acceptance categories:

1. Successful acceptance of Subsystem testing
2. Performance tests after connecting the system.
3. Functional tests after connecting the system.

All acceptance test results must be fully documented, and such documentation provided as a condition of acceptance.

87-10.01D(3)(f) Performance Tests

Performance tests must document the following:

1. Average TCP and UDP upstream and downstream Bandwidth
2. Average UDP upstream and downstream percent of packet loss
3. Average round trip time (RTT) or latency
4. Standard Deviation or a graph of each test over the time of the test
5. Location being tested with source IP address used in the test

You must conduct operational performance tests on the following:

1. From each field element endpoint to the TMC time sever or other approved equipment in TMC.

87-10.01D(3)(g) Final Acceptance

The system will not be accepted until all the following conditions have been met as follows:

1. Physical, performance, and functional acceptance tests have been completed and the results are approved.
2. All documentation has been completed and submitted.
3. All connections that were changed to perform acceptance tests are restored and tested to form a fully operational system.

87-10.02 MATERIALS

87-10.02A General

The 4G LTE modem assembly must include the 4G LTE modem, power supply, antenna, lightning suppressor, mounting hardware, and all cables needed to have a functional communication system. The modem assembly must comply with the minimum requirements shown in the following table:

Quality Characteristics	Requirements
Wireless network	Dual band 1900/850 MHz Supporting AT&T Cellular LTE, (4G)
Transmit power at antenna port	1.0 W for 1900 MHz 0.8 W for 850 MHz
Receiver sensitivity	-107 dBm (2.439 % bit error rate)
Routing and security	Static routing Dynamic routing Virtual Redundant Routing Protocol (VRRP) Port forwarding Tunneling protocol (GRE, VPN, etc.) Network address translation (NAT) Port, IP, MAC address filtering Remote authentication (RADIUS) Locally settable authentication Option to disable protocols Port-Based Authentication (IEEE 802.1x) Syslog and Trap server support
Input voltage (V(dc))	12/24 or POE (PD)
Input current range (mA)	40 — 200
LED indicators	Power Channel acquired Link status Network registration Received signal strength indicator Transmit and receive data
Management Interface	HTTP/HTTPS Web Browser Based Telnet/SSH/Serial Command Line Interface Remote and Local Firmware Updates SNMP v3
Temperature range (°F)	-13 — 135
Relative humidity non-condensing (%)	5 — 90
Physical dimensions (in)	< 8x4x2

The modem and associated firmware, software, hardware, protocol, and other features must support 3G and 4G networks and be fully compatible with the existing GPRS network. Demonstrate the compatibility to the Engineer by actual installation or by other authorized means.

The existing GPRS network utilizes the AT&T Wireless cellular system.

87-10.02A(1) Power Supply

The power supply for each 4G LTE modem must be compatible and approved by the modem manufacturer, and compatible with the voltage and power type (V(dc) or V(ac)) provided at each location. The power supply must operate in the same physical environment as the modem.

87-10.02A(2) Mounting Bracket and Hardware

The mounting bracket must:

1. Be corrosion resistant
2. Securely hold the modem in a vertical position with all cables and conductors installed
3. Contain the modem using a method that allows the removal of the modem without tools or without removing the bracket from its attachment to the cabinet frame

87-10.02A(3) Antenna

The antenna must:

1. Be the low-profile disc type, and mount to the cabinet using a factory installed threaded stud mount. The coax cable must be at least 3 feet long and have a compatible 50 Ω connector on the modem end.
2. Comply with the requirements as shown in the following table:

Parameter	Requirements
VSWR (at resonant point)	2:1 or less
Frequency	1850-1990 MHz and 824-894 MHz
Nominal impedance	50 Ω
Gain	2 dB
Radiation pattern	Omni-directional
Polarization	Vertical
Ground plane	- Required[a] -

[a] The antenna requires a reflective ground plane to function properly. The required ground plane must extend beyond the antenna at least 8 inches in all directions.

87-10.02A(4) Lightning Arrestor

A lightning arrestor must be furnished and installed inside the cabinet to protect radio and Ethernet equipment from lightning hit in accordance with the manufacturer/supplier recommendations. A Lightning Arrestor must be installed on all cable connections to pole mounted equipment outside the cabinet.

87-10.03 CONSTRUCTION

87-10.03A General

Provide the Engineer with the modem serial number, SIM and international mobile equipment identification (IMEI) numbers 30 days before requiring the packet data protocol (PDP) context. The Engineer will provide the PDP context comprising of the assigned IP and access point name (APN) obtained from service provider.

87-10.04 PAYMENT

Not Used

Add Section 87-11 to the Standard Specifications:

87-11 VIDEO IMAGE VEHICLE DETECTION SYSTEM (VIVDS)

87-11.01 General

87-11.01A Summary

Section 87-11 includes specifications for furnishing and installing the Video Image Vehicle Detection System (VIVDS).

87-11.01B Definitions

Video Detection Unit (VDU): Processor unit that converts the video image from the camera and provides vehicle detection in defined zones. Unit includes an image processor, extension module, and communication card.

Video Image Sensor Assembly (VIS): An enclosed and environmentally-protected camera assembly used to collect the video image.

Video Image Vehicle Detection System (VIVDS): A system that detects video images of vehicles in defined zones and provides video output.

87-11.01C Submittals

87-11.01C(1) General

Submit documentation within 30 days after Contract approval but before installing VIVDS equipment.

87-11.01C(2) Video Image Vehicle Detection System

The documentation submittal must include:

1. Certificate of Compliance: As specified in Section 6-3.05E, "Certificates of Compliance," of the Standard Specifications.
2. Site Analysis Report: Written analysis for each detection site, recommending the optimum video image sensor assembly placement approved by the manufacturer.
3. Lane Configuration: Shop drawing showing:
   - 3.1. Detection zone setback
   - 3.2. Detection zone size
   - 3.3. Camera elevation
   - 3.4. Selected lens viewing angle
   - 3.5. Illustration of detection zone mapping to reporting contact output
   - 3.6. Illustration of output connector pin or wire terminal for lane assignment.
4. Configuration Record: Windows PC compatible CD containing:
   - 4.1. Proposed zone designs
   - 4.2. Calibration settings
5. Mounting and Wiring Information: Manufacturer approved wiring video cable and service connection diagrams.
6. Communication Protocol: Industry standard available in public domain. Document defining:
   - 6.1. Message structure organization
   - 6.2. Data packet length
   - 6.3. Message usability
   - 6.4. Necessary information to operate a system from a remote windows based personal computer.
7. Programming Software: CD containing set up and calibration software that observes and detects the vehicular traffic, including bicycles, motorcycles, and sub-compact cars, with overlay of detection zones and allows adjustment of the detection sensitivity for a traffic signal application.
8. Detector Performance DVD Recordings and Analysis: Performance analysis based on 24-hour DVD recording of contiguous activity for each approach. Include:
   - 8.1. Two contiguous hours of sunny condition, with visible shadows projected a minimum of 6 feet into the adjacent lanes
   - 8.2. Two 1-hour night periods with vehicle headlights present.
9. Preventative Maintenance Parts Documentation: List of equipment replacement parts for preventative maintenance, including:
   - 9.1. Electrical parts, wiring and video cable
   - 9.2. Mechanical parts
   - 9.3. Assemblies.

Allow 7 days for the Engineer to review the documentation submittal.

If the Engineer requires revisions, submit a revised submittal within 5 days of receipt of the Engineer's comments and allow 5 days for the Engineer to review. If agreed to by the Engineer, revisions may be included as attachments in the resubmittal. The Engineer may conditionally approve, in writing, resubmittals that include revisions submitted as attachments, in order to allow construction activities to proceed.

Upon the Engineer's approval of the resubmittal, submit copies of the final documents(with approved revisions incorporated) to the Engineer.

Submit an acceptance testing schedule for approval 15 days before starting acceptance testing.

When beginning acceptance testing of VIVDS and detector performance and analysis, submit approved copies of the following:

1. Configuration Record: Windows PC compatible CD containing:
   1.1. Final zone designs
   1.2. Calibration settings to allow reinstallation.
2. Mounting and Wiring Information: Final wiring and service connection diagrams.
   2.1. One copy for the Engineer
   2.2. A second copy wrapped in clear self-adhesive plastic, be placed in a heavy duty plastic envelope, and secured to the inside of the cabinet door.

87-11.01D Quality Assurance

87-11.01D(1) General

VIVDS and support equipment required for acceptance testing must be new and as specified in the manufacturer's recommendations. Date of manufacture, as shown by date codes or serial numbers of electronic circuit assemblies, must not be older than 12 months from the scheduled installation start date. Material substitutions must not deviate from the material list approved by the Engineer.

87-11.01D(2) Training

Not used

87-11.01D(3) Warranty

Furnish a 3-year replacement warranty from the manufacturer of VIS and VDU against defects in materials and workmanship or failures. The effective date of the warranty is the date of acceptance of the installation. Submit all warranty documentation before installation.

Replacement VIS and VDU must be furnished within 10 days of receipt of a failed unit. The Department does not pay for replacement.

Deliver replacement VIS and VDU to Caltrans Maintenance Electrical Shop at:

District 8 - Caltrans Electrical Maintenance Yard
175 West Cluster Street
San Bernardino, CA 92408

87-11.02 MATERIALS

87-11.02A General

VIVDS must include necessary firmware, hardware, and software for designing the detection patterns or zones at the intersection or approach. Detection zones must be created with a graphic user interface designed to allow to anyone trained in VIVDS system setup to configure and calibrate a lane in less than 15 minutes.

System elements must comply with the manufacturer's recommendations and be designed to operate continuously in an outdoor environment.

All equipment, cables, and hardware must be part of an engineered system that is designed by the manufacturer to fully interoperate with all other system components. Mounting assemblies must be corrosion resistant. Connectors installed outside the cabinets and enclosures must be corrosion resistant, weather proof, and watertight. Exposed cables must be sunlight and weather resistant.

87-11.02B Physical and Mechanical Requirements

VIVDS must include:

1. VIS and mounting hardware. Use a clamping device as mounting hardware on a pole or mast-arm.
2. VDU
3. Power supply
4. Surge suppression
5. Cables
6. Connectors
7. Wiring for connecting to the Department-furnished Model 332L traffic controller cabinet.

8. Communication card with multi-display port
9. Flat panel video display
10. DIN Rail mounted AC power assembly that includes a minimum of one convenience receptacle, four camera chassis ground connections, four camera AC neutral (AC-) connections, four 2 amp camera circuit breakers for hot (AC+) connections, and one AC source connection for Line, Neutral and Ground wires.
11. DIN Rail video surge suppression protection assembly that can accommodate up to six surge suppression modules

87-11.02C Electrical Requirements

VIVDS must operate between 90 to 135 V(ac) service as specified in NEMA TS-1. VIS, excluding the heater circuit, must draw less than 10 W of power**.** Power supply or transformer for the VIVDS must meet the following minimum requirements:

Minimum Requirements for Power Supply and Transformers

Item	Power Supply	Transformer
Power Cord	Standard 120 V(ac), 3 prong cord, 3 feet minimum length (may be added by Contractor)	Standard 120 V(ac), 3 prong cord, 3 feet minimum length (may be added by Contractor)
Type	Switching mode type	Class 2
Rated Power	Two times (2x) full system load	Two times (2x) full system load
Operating Temperature	From -37 to 74 °C	From -37 to 74 °C
Operating Humidity Range	From 5 to 95 percent	From 5 to 95 percent
Input Voltage	From 90 to 135 V(ac)	From 90 to 135 V(ac)
Input Frequency	60 ± 3 Hz	60 ± 3 Hz
Inrush Current	Cold start, 25 A Max. at 115 V(ac)	N/A
Output Voltage	As required by VIVDS	As required by VIVDS
Overload Protection	From 105 to 150 percent in output pulsing mode	Power limited at >150 percent
Over Voltage Protection	From 115 to 135 percent of rated output voltage	N/A
Setup, Rise, Hold Up	800ms, 50ms,15ms at 115 V(ac)	N/A
Withstand Voltage	I/P-0/P:3kV, I/P-FG:1.5kV, for 60 s.	I/P-0/P:3kV, I/P-FG:1.5kV, for 60 s
Working Temperature	Not to exceed 70°C at 30 percent load	Not to exceed 70 °C at 30 percent load
Safety Standards	UL 1012, UL 60950	UL 1585

Field terminated circuits must include transient protection as specified in IEEE Standard 587-1980, Category C. Video connections must be isolated from ground.

87-11.02D Technical Requirements

Camera and zoom lens assembly must be housed in an environmentally sealed enclosure that complies with NEMA 4 standards. Enclosure must be watertight and protected from dust. Enclosure must include a thermostat controlled heater to prevent condensation and to ensure proper lens operation at low temperatures. Adjustable sun shield that diverts water from the camera's field of view must be included. Connectors, cables and wiring must be enclosed and protected from weather. A gas tight (protected from dust and moisture ingress) connector must be used at the rear plate of the housing. Wiring to the connector must be sealed with silicone or potting compound.

Each camera and its mounting hardware must be less than 10 pounds and less than 1 square foot equivalent pressure area. Only one camera must be mounted on a traffic signal or luminaire arm. Top of camera must not be more than 12 inches above top of luminaire arm or 30 inches above top of traffic signal arm.

VIS must use a charge-coupled device (CCD) element, support National Television Standards Committee (NTSC) and RS170 video output formats, and have a horizontal resolution of at least 360 lines. VIS must include an auto gain control (AGC) circuit, have a minimum sensitivity to scene luminance from 0.01 to 930 foot-candle, and produce a usable video image of vehicular traffic under all roadway lighting conditions regardless of the time of day. VIS must have a motorized lens with variable focus and zoom control with an aperture of f/1.4 or better. Focal length must allow ± 50 percent adjustment of the viewed detection scene.

A flat panel video display with a minimum 17-inch screen and that supports NTSC video output must be enclosed in the Model 332L cabinet for viewing video detector images and for performing diagnostic testing. Display must be viewable in direct sunlight. Each VIVDS must have video system connections that support the NTSC video output format, can be seen in each camera's field of view, and has a program to allow the user to switch to any video signal at an intersection. A metal shelf or pull-out document tray with metal top capable of supporting the VDU and monitor must be furnished and placed on an EIA 19 inch rack with 10-32 "Universal Spacing" threaded holes in the Model 332L cabinet. System must allow independent viewing of a scene while video recording other scenes without interfering with the operation of the system's output.

Mounting hardware must be powder-coated aluminum, stainless steel, or treated to withstand 250 hours of salt fog exposure as specified in ASTM B 117 without any visible corrosion damage.

VDU must operate between –37 to +74 degrees C and from 0 to 95 percent relative humidity.

VDU front panel must have indicators for power, communication, presence of video input for each VIS, and a real time detector output operation. Hardware or software test switch must be included to allow the user to place either a constant or momentary call for each approach. Indicators must be visible in daylight from 5 feet away.

VDU must have a serial communication port, EIA 232/USB 2.0 that supports sensor unit setup, diagnostics, and operation from a local PC compatible laptop with Windows XP or later version operating system. VIVDS must have an Ethernet communication environment, including Ethernet communication card. VIVDS must include central and field software to support remote real-time viewing and diagnostics for operational capabilities through wide area network (WAN).

VDU, image processors, extension modules, and video output assemblies must be inserted into the controller input file slots using the edge connector to obtain limited 24 V(dc) power and to provide contact closure outputs. Cabling the output file to a "D" connector on the front of the VDU is acceptable. No rewiring to the standard Model 332L cabinet is allowed. Controller cabinet resident modules must comply with the requirements in Chapter 1 and Sections 5.2.8, 5.2.8.1, 5.2.8.2, 5.4.1, 5.4.5, 5.5.1, 5.5.5, and 5.5.6 of TEES.

87-11.02E Functional Requirements

VIVDS must support normal operation of existing detection zones while a zone is being added or modified. Zone must flash or change color on a viewing monitor when vehicular traffic is detected. Length and width of each detection zone for each lane must be approved by the Engineer.

Software and firmware must detect vehicular traffic presence, provide vehicle counts, set up detection zones, test VIVDS performance, and allow video scene and system operation viewing from the local traffic management center/office. VIVDS must support a minimum of 2 separate detection patterns or zones that can be enacted by a remote operator at the signal controller cabinet.

VIVDS detection zone must detect vehicles by providing an output for presence and pulse. At least one detection output must be provided for each detection zone. One spare detection output must be provided for each approach. Detection performance must be achieved for each detection zone with a maximum of 8 user-defined zones for every camera's field of view.

VIVDS must detect the presence of vehicles under all types of adverse weather and environmental conditions, including snow, hail, fog, dirt, dust or contaminant buildup on the lens or faceplate, minor camera motion due to winds, and vibration. Under low visibility conditions, the VIVDS must respond by selecting a fail-safe default pattern, placing a constant call mode for all approaches. VIVDS outputs must assume a fail-safe "on" or "call" pattern for presence detection if video signal or power is not available and must recover from a power failure by restoring normal operations within 3 minutes without manual intervention. If powered off for more than 90 days, system must maintain the configuration and calibration information in memory.

Detection algorithm must be designed to accommodate naturally occurring lighting and environment changes, specifically the slow moving shadows cast by buildings, trees, and other objects. These changes must not result in a false detection or mask a true detection. VIVDS must not require manual interventions for day-night transition or for reflections from poles, vehicles or pavement during rain and weather changes. VIVDS must suppress blooming effects from vehicle headlights and bright objects at night.

Vehicle detection must call service to a phase only if a demand exists and extend green service to the phase until the demand is taken care of or until the flow rates have reduced to levels for phase termination. VIVDS must detect the presence of vehicular traffic at the detection zone positions and provide the call contact outputs to the Model 170E or Model 2070L controller assembly with the following performance:

Detector Performance

Requirements	Performance during AMBER and RED interval	Performance during GREEN interval
Average response time after vehicle enters 3 feet into detection zone or after exiting 3 feet past detection zone	≤ 1 s	≤ 100 ms
Maximum number of MISSED CALLS in 24-hour duration, where MISSED CALLS are greater than 5 s during AMBER and RED intervals and greater than 1 s during GREEN intervals (upon entering 3 feet of detection zone or after exiting3 feet past detection zone).	0	10
Maximum number of FALSE CALLS in 24-hour duration (calls greater than 500ms without a vehicle present)	20	20

VIVDS must be able to locally store, for each lane, vehicle count data in 5, 15, 30, and 60 minute intervals for a minimum period of 7 days and be remotely retrievable. VIVDS must count vehicular traffic in detection zone with a 95 percent accuracy or better for every hour counted over a morning or an evening peak hour. VIVDS detection zone tested must have a minimum range of 50 feet behind the limit line for each approach. Testing period will be pre-approved by the Engineer 48 hours in advance.

Install VDU in a Department-furnished Model 2070 controller assembly. Install VIS power supply or transformer on a standard DIN rail using standard mounting hardware and power conductors wired to DIN rail mounted terminal blocks in the controller cabinet. Each VIS must be connected to an individual circuit breaker in the DIN Rail mounted power assembly.

Wiring must be routed through end caps or existing holes and sealed. New holes for mounting or wiring must be shop-drilled.

Wire each VIS to the controller cabinet with a wiring harness that includes all power, control wiring, and coaxial video cable. Attach harness with standard MIL type and rated plugs. Cable type, connectors and wire characteristics must comply with manufacturer's recommendations for the VIS to cabinet distance. Wiring and cables must be continuous, without splices, between the VIS and controller cabinet. Coil a minimum of 7 feet of slack in the bottom of the controller cabinet. For setup and diagnostic access, terminate serial data communication output conductors at TB-0 and continue for a minimum of 10 feet to a DB9F connector. Tape ends of unused and spare conductors to prevent accidental contact to other circuits.

Label conductors inside the cabinet for the functions depicted the approved detailed diagrams. Label cables with permanent cable labels at each end.

Adjust the lens to view 110 percent of the largest detection area dimension. Zones or elements must be logically combined into reporting contact outputs that are equivalent to the detection loops and with the detection accuracy required.

Verify the performance of each unit, individually, and submit the recorded average and necessary material at the conclusion of the performance test. Determine and document the accuracy of each unit, individually, so that each unit may be approved or rejected separately. Failure to submit necessary material at the conclusion of testing invalidates the test. The recorded media serves as acceptance evidence and must not be used for calibration. Calibration must have been completed before testing and verification.

Verify the detection accuracy by observing the VIVDS performance and recorded video images for a contiguous 24-hour period. The recorded video images must show the viewed detection scene, the detector call operation, the signal phase status for each approach, the vehicular traffic count, and time-stamp to 1/100 of a second, all overlaid on the recorded video. Transfer the 24-hour analysis to DVD.

VIVDS must meet the detection acceptance criterion specified in table titled "Detector Performance."

Calculate the VIVDS's vehicular traffic count accuracy as 100[1-(|TC-DC|/TC)], where DC is the detector's vehicular traffic count and TC is the observed media-recorded vehicular traffic count and where the resulting fraction is expressed as an absolute value.

The Engineer will review the data findings and accept or reject the results within 7 days. Vehicle anomalies or unusual occurrences will be decided by the Engineer. Data or counts not agreed by the Engineer will be considered errors and count against the unit's calibration. If the Engineer determines that the VIVDS does not meet the performance requirements, you must re-calibrate and retest the unit, and resubmit new test data within 7 days. After 3 failed attempts, you must replace the VIVDS with a new unit.

Notify the Engineer 20 days before the unit is ready for acceptance testing. Acceptance testing must be scheduled to be completed before the end of a normal work shift. You must demonstrate that all VIS and VDUs satisfy the functional requirements.

87-11.04 PAYMENT

Not Used

87-15 ETHERNET FIBER OPTIC SWITCH + POE

87-15.01 General

87-15.01A Summary

Section 87-15.01 includes specifications for furnishing and installing the Ethernet Fiber Optic Switch + POE (EFOS + POE).

87-15.01B Definitions

CLI: A Command-Line Interface is a means of interaction with a computer program where the user issues commands to a program in the form of successive lines of text.

DHCP: The Dynamic Host Configuration Protocol is a network protocol to configure network devices so that they can communicate on an IP network.

DNS: Domain Name System/Server is an Internet service that translates domain names into IP addresses.

IP: Internet Protocol, a communications protocol for computers connected to a network specifying the format for addresses and units of transmitted data.

SNMP: Simple Network Management Protocol is an Internet-standard protocol for managing devices on IP networks.

TIA: Telecommunications Industry Association. The standard address commercial building cabling for telecommunications products and services.

POE+ / POE: Power Over Ethernet IEEE 802.3at and IEEE 802.3af standards provides power on a standard Category 5 cable.

87-15.01C Submittals

Submit a draft copy of all documentation for review and approval before production of documentation. The Engineer will review and approve or reject the draft documentation within 2 weeks of receipt.

Submit two copies of all final documents. The copies must be 8.5 inches by 11 inches and bound in three-ring, hard-covered binders, complete with dividers.

Documentation must consist of the following types of manuals and drawings and must include the information described.

1. Configuration of Hardware and Software Documentation
   1.1. Provide proper documentation for all configurations of hardware and software.

2. Test Results
   2.1. The test result section of the operations and maintenance must include a copy of the results for all the tests that you have conducted. Detailed test requirements are listed under the Quality Control section.

87-15.01D Quality Assurance

87-15.01D(1) General

Not Used.

87-15.01D(2) Warranty

Furnish a 5 year replacement warranty from the manufacturer against any defects in materials or workmanship. The effective date of the warranty is the date of contract acceptance. Replacement parts must arrive within 5 business days after receipt of the failed parts. The Department does not pay for replacement parts. Deliver replacement parts to:

District 8 – Inland Empire TMC
13892 Victoria Street
Fontana, CA 92336

87-15.01E Quality Control

87-15.01E(1) General

Not Used.

87-15.01E(1)(a) Data Integration Testing

You must test all material, equipment, and cable after installation. These tests must comply with the "Performance Testing" sub-sections for each individual item where applicable.

You must supply all test equipment required.

Switches and routing equipment must be delivered to the TMC for configuration, a minimum of 2 weeks prior to installation in the field.
You must configure all other equipment prior to testing or installation in the field.
The following network information will be supplied:

1. IP addresses
2. Mask
3. Gateway
4. Replacement Administrative Password
5. SNMP Community Strings
6. Wireless Security Settings (when applicable)

You must submit an installation and test plan which details the method of installation and site testing for all material, equipment, and cable and the associated schedule of activities. Two copies of the installation and test plan must be submitted for approval, at least 2 weeks before proposed testing dates.

The equipment and hardware must be installed as shown and described. Tests and inspections must include:

1. Visual inspection for damaged or incorrect installation.
2. Measurement of parameters and operating conditions.

These tests must be performed in accordance with the approved installation and test plan.
You must notify the Engineer of your intent to proceed with installation and testing 48 hours before commencement of each test.

87-15.01E(1)(b) Physical Inspection

You must provide documentation to prove delivery of all material, equipment, cable and documentation. If any material or documentation is outstanding or have been replaced under pre-acceptance warranty a physical inspection and documentation must be provided for this material. The physical inspection must consist of inspecting all installed material to ensure that workmanship satisfies the specified requirements.

87-15.01E(1)(c) Data Link Testing

To verify all the communication equipment is properly connected and responding to the assigned IP addresses, the acceptance testing for each device consists of the following steps:

3. From the Inland Empire Transportation Management Center (TMC), with the communication system functioning under normal conditions, each device must respond as follows:

    G. The device must respond correctly to an Internet Control Message Protocol (ICMP) echo requests from the District TMC.

    H. The device must be turned OFF. An ICMP echo request from the District TMC must then be sent and the device must not be responsive.

    I. The device must then be turned ON. An ICMP echo request from the District TMC must be then be sent and the device must be responsive. At least five consecutive responses without packet loss are required to be considered a successful test.

Verify that each device responds and record the response time for each request.

The Inland Empire TMC is located at:
13892 Victoria Street
Fontana, CA 92336

87-15.01E(5)(d) Acceptance Testing

Acceptance testing includes the preparation of an acceptance test plan, conducting acceptance tests and subsequent retests, and documentation of the results.

Final acceptance tests must be conducted after the site test results have been reviewed and accepted. These tests include the complete system in normal operations.

The acceptance test plan must detail all tests to be performed, the test results which are expected and the test schedule. The acceptance test plan will include the following major tests and acceptance categories:

1. Successful acceptance of Subsystem testing

2. Performance tests after connecting the system.
3. Functional tests after connecting the system.

All acceptance test results must be fully documented and such documentation provided as a condition of acceptance.

87-15.01E(5)(e) Performance Tests

Performance tests must document the following:

1. Average TCP and UDP upstream and downstream Bandwidth
2. Average UDP upstream and downstream percent of packet loss
3. Average round trip time (RTT) or latency
4. Standard Deviation or a graph of each test over the time of the test
5. Location being tested with source IP address used in the test

You must conduct operational performance tests on the following:

1. From each field element endpoint to the TMC time sever or other approved equipment in TMC.

87-15.01E(5)(f) Final Acceptance

The system will not be accepted until all the following conditions have been met as follows:

1. Physical, performance, and functional acceptance tests have been completed and the results are approved.
2. All documentation has been completed and submitted.
3. All connections that were changed to perform acceptance tests are restored and tested to form a fully operational system.

87-15.02 MATERIALS

87-15.02A General

Prototype equipment is not acceptable. Any equipment meeting the specification that has not been available in that configuration for 6 months will be considered a prototype.

Physical Requirements	
Description	Parameter
POE + Ethernet Electrical Ports	Minimum 6 (IEEE 802.3 af/at POE)(10/100 BASE-TX)
Single Mode Optical Ports	Minimum 2 (100Base-FX) (with 2 FO Connections for each port) (SFP based ports acceptable)
Console Port	1
Input Voltage	24 - 48 V DC, or 120 VAC (per plans)

Operational Requirements	
Description	Parameters
Optical Port Configuration	1. 100Base-FX
	2. 8 Miles Minimum Distance for SM 100FX
	3. Fiber Optic Connectors for SC or LC (SFP based ports acceptable)
	4. Port aggregation with VLAN support
	5. Port Mirroring

Management and Control Function Requirements
1. HTTPS/Web Browser Based Management Interface
2. Telnet and SSH for Remote Management (option to disable protocols)
3. TFTP, SFTP or FTP for Remote Firmware Upgrades (option to disable protocols)
4. SNMPv3 for Network Management
5. Console Connection for Local Management
6. Packet Filtering and Port Security
7. Text Based Command Line Interface
8. Text Based Configuration Files (passwords encrypted)
9. POE output control (off and on per port)
10. Radius authentication support
11. Syslog and Trap server support

Protocol Requirements
1. Institute of Electrical and Electronics Engineers (IEEE) 802.3
2. IEEE 802.3u 100Base-T
3. IEEE 802.3x Flow Control
4. IEEE 802.1Q Virtual Local Area Network (VLAN) Tagging
5. IEEE 802.1D Spanning Tree Protocol (STP, RSTP, MSTP)
6. IEEE 802.1p Quality of Service (QoS)
7. IEEE 802 1AB Link Layer Discovery Protocol (LLDP)
8. IEEE 802.3af/at for Power-over-Ethernet
9. IEEE 802.1x Port-Based Authentication

Minimum LED Status Indications
Power
Link
Fiber Port Status

Environmental Requirements	
Description	Parameter
Operating Temperature Range	From -10 to +70 C
Relative Humidity	From 10 to 95 percent, non-condensing
Hardened	Meet NEMA TS-1/TS-2 Standard

87-15.02B Power Supply

The power supply, when needed, for each EFOS + POE must be approved by the manufacturer and be compatible with the voltage and power type (V(dc) or V(ac)) provided at each location. The power supply must operate in the same physical environment. The power supply can be integrated into the EFOS + POE.

The power supply must be able to fully power the device, the potential load capacity of the combined POE ports, and any other devices that are approved to be connected to the power supply by the Engineer.

87-15.03 CONSTRUCTION

The installation of the EFOS + POE must be according to the manufacturer's instructions.

Deliver switch to the TMC a minimum of 2 weeks prior to installation in the field for configuration:

District 8 – Inland Empire TMC
13892 Victoria Street
Fontana, CA 92336

The EFOS + POE must be the DIN rail mount type. The placement of the EFOS + POE must allow for provisions for cable installation and maintenance.

87-15.04 PAYMENT

Not Used

Add to the end of section 87-21.03C:

Modifying a lighting system includes removing, adjusting, or adding:

1. Foundations
2. Pull boxes
3. Conduit
4. Conductors
5. Standards
6. Luminaires
7. Service equipment enclosure
8. Photoelectric control
9. Fuse splice connectors
10. Overhead sign luminaires

Modifying a signal and lighting system includes removing, adjusting, or adding:

1. Foundations
2. Pull boxes
3. Conduit
4. Conductors
5. Cables
6. Standards
7. Signal heads
8. Internally illuminated street name signs
9. Service equipment enclosure
10. Department-furnished controller assembly
11. Detectors
12. 4G LTE Modem
13. Accessible pedestrian signals
14. Push button assemblies
15. Pedestrian signal heads
16. Luminaires
17. Photoelectric control
18. Fuse splice connectors
19. Battery backup system
20. Detectors (including VIVDS)

Modifying a ramp metering system includes removing, adjusting, or adding:

1. Foundations
2. Pull boxes
3. Conduit
4. Conductors
5. Standards
6. Signal heads
7. Service equipment enclosure
8. Department-furnished controller assembly
9. Detectors
10. 2070 Upgrade Card

Modifying interconnection conduit and cable includes removing, adjusting, or adding:

1. Pull boxes
2. Conduit
3. Signal interconnect cables
4. Data Node Cabinet
5. 4G LTE Modem
6. Ethernet Fiber Optic Switch + POE

7. Ethernet Extender
8. Data Node Fiber Optic Switch
9. Ethernet Switch + POE

87-24 ETHERNET EXTENDER

87-24.03 General

87-24.03A Summary

Section 87-24.03 includes specifications for furnishing and installing the Ethernet Extender (EE).

87-24.03B Definitions

CLI: A Command-Line Interface is a means of interaction with a computer program where the user issues commands to a program in the form of successive lines of text.

DHCP: The Dynamic Host Configuration Protocol is a network protocol to configure network devices so that they can communicate on an IP network.

DNS: Domain Name System/Server is an Internet service that translates domain names into IP addresses.

IP: Internet Protocol, a communications protocol for computers connected to a network specifying the format for addresses and units of transmitted data.

SNMP: Simple Network Management Protocol is an Internet-standard protocol for managing devices on IP networks.

TIA: Telecommunications Industry Association. The standard address commercial building cabling for telecommunications products and services.

POE+ / POE: Power Over Ethernet IEEE 802.3at and IEEE 802.3af standards provides power on a standard Category 5 cable.

87-24.03C Submittals

Submit a draft copy of all documentation for review and approval before production of documentation. The Engineer will review and approve or reject the draft documentation within 2 weeks of receipt.

Submit two copies of all final documents. The copies must be 8.5 inches by 11 inches and bound in three-ring, hard-covered binders, complete with dividers.

Documentation must consist of the following types of manuals and drawings and must include the information described.

1. Configuration of Hardware and Software Documentation
   1.1. Provide proper documentation for all configurations of hardware and software.

2. Test Results
   2.1. The test result section of the operations and maintenance must include a copy of the results for all the tests that you have conducted. Detailed test requirements are listed under the Quality Control section.

87-24.03D Quality Assurance

87-24.03D(1) General

Not Used.

87-24.03D(2) Warranty

Furnish a 5 year replacement warranty from the manufacturer against any defects in materials or workmanship. The effective date of the warranty is the date of contract acceptance. Replacement parts must arrive within 5 business days after receipt of the failed parts. The Department does not pay for replacement parts. Deliver replacement parts to:

District 8 – Inland Empire TMC
13892 Victoria Street
Fontana, CA 92336

87-24.03E Quality Control

87-24.03E(1) General

Not Used.

87-24.03E(1)(a) Data Integration Testing

You must test all material, equipment, and cable after installation. These tests must comply with the "Performance Testing" sub-sections for each individual item where applicable.

You must supply all test equipment required.

Switches and routing equipment must be delivered to the TMC for configuration, a minimum of 2 weeks prior to installation in the field.
You must configure all other equipment prior to testing or installation in the field.
The following network information will be supplied:

1. IP addresses
2. Mask
3. Gateway
4. Replacement Administrative Password
5. SNMP Community Strings
6. Wireless Security Settings (when applicable)

You must submit an installation and test plan which details the method of installation and site testing for all material, equipment, and cable and the associated schedule of activities. Two copies of the installation and test plan must be submitted for approval, at least 2 weeks before proposed testing dates.

The equipment and hardware must be installed as shown and described. Tests and inspections must include:

1. Visual inspection for damaged or incorrect installation.
2. Measurement of parameters and operating conditions.

These tests must be performed in accordance with the approved installation and test plan.
You must notify the Engineer of your intent to proceed with installation and testing 48 hours before commencement of each test.

87-24.03E(1)(b) Physical Inspection

You must provide documentation to prove delivery of all material, equipment, cable and documentation. If any material or documentation is outstanding or have been replaced under pre-acceptance warranty a physical inspection and documentation must be provided for this material. The physical inspection must consist of inspecting all installed material to ensure that workmanship satisfies the specified requirements.

87-24.03E(1)(c) Data Link Testing

To verify all of the communication equipment is properly connected and responding to the assigned IP addresses, the acceptance testing for each device consists of the following steps:

1. From the Inland Empire Transportation Management Center (TMC), with the communication system functioning under normal conditions, each device must respond as follows:

    A. The device must respond correctly to an Internet Control Message Protocol (ICMP) echo requests from the District TMC.

    B. The device must be turned OFF. An ICMP echo request from the District TMC must then be sent and the device must not be responsive.

C. The device must then be turned ON. An ICMP echo request from the District TMC must be then be sent and the device must be responsive. At least five consecutive responses without packet loss are required to be considered a successful test.

Verify that each device responds and record the response time for each request.

The Inland Empire TMC is located at:
13892 Victoria Street
Fontana, CA 92336

87-24.01E(5)(d) Acceptance Testing

Acceptance testing includes the preparation of an acceptance test plan, conducting acceptance tests and subsequent retests, and documentation of the results.

Final acceptance tests must be conducted after the site test results have been reviewed and accepted. These tests include the complete system in normal operations.

The acceptance test plan must detail all tests to be performed, the test results which are expected and the test schedule. The acceptance test plan will include the following major tests and acceptance categories:

1. Successful acceptance of Subsystem testing
2. Performance tests after connecting the system.
3. Functional tests after connecting the system.

All acceptance test results must be fully documented and such documentation provided as a condition of acceptance.

87-24.01E(5)(e) Performance Tests

Performance tests must document the following:

1. Average TCP and UDP upstream and downstream Bandwidth
2. Average UDP upstream and downstream percent of packet loss
3. Average round trip time (RTT) or latency
4. Standard Deviation or a graph of each test over the time of the test
5. Location being tested with source IP address used in the test

You must conduct operational performance tests on the following:

1. From each field element endpoint to the TMC time sever or other approved equipment in TMC.

87-24.01E(5)(f) Final Acceptance

The system will not be accepted until all the following conditions have been met as follows:

1. Physical, performance, and functional acceptance tests have been completed and the results are approved.
2. All documentation has been completed and submitted.
3. All connections that were changed to perform acceptance tests are restored and tested to form a fully operational system.

87-24.04 MATERIALS

87-24.04A General

The Ethernet Extender provides high bandwidth communications over copper network cable exceeding 328 feet. The Ethernet Extender function can be integrated into an Ethernet switch as long as all of the specifications for the switch and the extender are still met.

Port Requirements	
Description	Parameter
Ethernet Port	Support Auto MDIX 10/100 Mbps, Full/Half Duplex Mode, Auto Negotiation Speed
Console Port	EIA232
Extender Port	RJ45 VDSL2

Standards Requirements
1. 802.3 (10Base-T)
2. 802.3u (100Base-TX)
3. 802.3x Flow Control
4. 802.1p for Class of Service
5. Ethernet over VDSL2
6. 802.1Q Virtual Local Area Network (VLAN) Tagging

Protocol Requirements
1. SNMPv1/v2c/v3
2. TFTP
3. SNTP
4. HTTP/HTTPS (option to disable protocols)
5. Telnet/SSH (option to disable protocols)
6. LLDP
7. MIB-II

Minimum LED Status Indications
Power Status
Link Activity 10/100TX
Fault

Power Requirements
External Switching Power Adapter (for AC installations)
Input Voltage 12-48 V DC or 120-240 V AC (as per plans)

Environmental Requirements	
Description	Parameter
Operating Temperature Range	From -40 to +167 °F
Relative Humidity	From 5 to 95 percent, Non-condensing

Regulatory Approvals	
Description	Parameters
EMI	1. FCC Part 15 Class A
	2. EN 55022 Class A
EMS	1. EN61000-4-2
	2. EN61000-4-3
	3. EN61000-4-4
	4. EN61000-4-5
	5. EN61000-4-6
	6. EN61000-4-8

Mechanical Requirements
Metal Case
IP30 Rated
DIN Rail Mount

87-24.04A(1) Power Supply

The power supply, when needed, for each Ethernet Extender must be approved by the manufacturer and be compatible with the voltage and power type (V(dc) or V(ac)) provided at each location. The power supply must operate in the same physical environment.

87-24.05 CONSTRUCTION

When installing an Ethernet Extender optimize the configuration. For Extenders with asymmetrical data rates, configure the higher bandwidth requirements on the higher capacity path. Enable flow control for links with video data. Flow control may also need to be enabled on other connected Ethernet equipment when used with an Extender.

87-24.06 PAYMENT

Not Used

87-25 DATA NODE FIBER OPTIC SWITCH

87-25.03 General

87-25.03A Summary

Section 87-25.03 includes specifications for furnishing and installing the Data Node Fiber Optic Switch (DNFOS).

87-25.03B Definitions

CLI: A Command-Line Interface is a means of interaction with a computer program where the user issues commands to a program in the form of successive lines of text.

DHCP: The Dynamic Host Configuration Protocol is a network protocol to configure network devices so that they can communicate on an IP network.

DNS: Domain Name System/Server is an Internet service that translates domain names into IP addresses.

IP: Internet Protocol, a communications protocol for computers connected to a network specifying the format for addresses and units of transmitted data.

SNMP: Simple Network Management Protocol is an Internet-standard protocol for managing devices on IP networks.

TIA: Telecommunications Industry Association. The standard address commercial building cabling for telecommunications products and services.

87-25.03C Submittals

Submit a draft copy of all documentation for review and approval before production of documentation. The Engineer will review and approve or reject the draft documentation within 2 weeks of receipt.

Submit two copies of all final documents. The copies must be 8.5 inches by 11 inches and bound in three-ring, hard-covered binders, complete with dividers.

Documentation must consist of the following types of manuals and drawings and must include the information described.

1. Configuration of Hardware and Software Documentation

1.1. Provide proper documentation for all configurations of hardware and software.

2. Test Results
   2.1. The test result section of the operations and maintenance must include a copy of the results for all the tests that you have conducted. Detailed test requirements are listed under the Quality Control section.

87-25.03D Quality Assurance

87-25.03D(1) General

Not Used.

87-25.03D(2) Warranty

Furnish a 5 year replacement warranty from the manufacturer against any defects in materials or workmanship. The effective date of the warranty is the date of contract acceptance. Replacement parts must arrive within 5 business days after receipt of the failed parts. The Department does not pay for replacement parts. Deliver replacement parts to:

District 8 – Inland Empire TMC
13892 Victoria Street
Fontana, CA 92336

87-25.03E Quality Control

87-25.03E(1) General

Not Used.

87-25.03E(1)(a) Data Integration Testing

You must test all material, equipment, and cable after installation. These tests must comply with the "Performance Testing" sub-sections for each individual item where applicable.

You must supply all test equipment required.

Switches and routing equipment must be delivered to the TMC for configuration, a minimum of 2 weeks prior to installation in the field.
You must configure all other equipment prior to testing or installation in the field.
The following network information will be supplied:

1. IP addresses
2. Mask
3. Gateway
4. Replacement Administrative Password
5. SNMP Community Strings
6. Wireless Security Settings (when applicable)

You must submit an installation and test plan which details the method of installation and site testing for all material, equipment, and cable and the associated schedule of activities. Two copies of the installation and test plan must be submitted for approval, at least 2 weeks before proposed testing dates.

The equipment and hardware must be installed as shown and described. Tests and inspections must include:

1. Visual inspection for damaged or incorrect installation.
2. Measurement of parameters and operating conditions.

These tests must be performed in accordance with the approved installation and test plan.
You must notify the Engineer of your intent to proceed with installation and testing 48 hours before commencement of each test.

87-25.03E(1)(b) Physical Inspection

You must provide documentation to prove delivery of all material, equipment, cable and documentation. If any material or documentation is outstanding or have been replaced under pre-acceptance warranty a physical inspection and documentation must be provided for this material. The physical inspection must

consist of inspecting all installed material to ensure that workmanship satisfies the specified requirements.

87-25.03E(1)(c) Data Link Testing

To verify all of the communication equipment is properly connected and responding to the assigned IP addresses, the acceptance testing for each device consists of the following steps:

4. From the Inland Empire Transportation Management Center (TMC), with the communication system functioning under normal conditions, each device must respond as follows:

    D. The device must respond correctly to an Internet Control Message Protocol (ICMP) echo requests from the District TMC.

    E. The device must be turned OFF. An ICMP echo request from the District TMC must then be sent and the device must not be responsive.

    F. The device must then be turned ON. An ICMP echo request from the District TMC must be then be sent and the device must be responsive. At least five consecutive responses without packet loss are required to be considered a successful test.

Verify that each device responds and record the response time for each request.

The Inland Empire TMC is located at:
13892 Victoria Street
Fontana, CA 92336

87-25.01E(5)(d) Acceptance Testing

Acceptance testing includes the preparation of an acceptance test plan, conducting acceptance tests and subsequent retests, and documentation of the results.

Final acceptance tests must be conducted after the site test results have been reviewed and accepted. These tests include the complete system in normal operations.

The acceptance test plan must detail all tests to be performed, the test results which are expected and the test schedule. The acceptance test plan will include the following major tests and acceptance categories:

1. Successful acceptance of Subsystem testing
2. Performance tests after connecting the system.
3. Functional tests after connecting the system.

All acceptance test results must be fully documented and such documentation provided as a condition of acceptance.

87-25.01E(5)(e) Performance Tests

Performance tests must document the following:

1. Average TCP and UDP upstream and downstream Bandwidth
2. Average UDP upstream and downstream percent of packet loss
3. Average round trip time (RTT) or latency
4. Standard Deviation or a graph of each test over the time of the test
5. Location being tested with source IP address used in the test

You must conduct operational performance tests on the following:

1. From each field element endpoint to the TMC time sever or other approved equipment in TMC.

87-25.01E(5)(f) Final Acceptance

The system will not be accepted until all the following conditions have been met as follows:

1. Physical, performance, and functional acceptance tests have been completed and the results are approved.
2. All documentation has been completed and submitted.

3. All connections that were changed to perform acceptance tests are restored and tested to form a fully operational system.

87-25.04 MATERIALS

87-25.04A General

Prototype equipment is not acceptable. Any equipment meeting the specification that has not been available in that configuration for 6 months will be considered a prototype.

Physical Requirements	
Description	Parameter
Ethernet Electrical Ports	Minimum 10 (10/100 BASE-TX)
Single Mode Optical Ports	Minimum 4 (100Base-FX)
Single Mode Optical Ports	Minimum 2 (1000Base-Long Haul)
EIA-232 Console Port	1
Input Voltage	, 120 V AC

Operational Requirements	
Description	Parameters
Electrical Port Configuration	1. 10/100 Base-TX
	2. RJ-45 Female Connector
	3. Automatic and User-selectable Speed Setting
	4. Automatic and User-selectable half/full duplex setting
	5. Port Aggregation with VLAN support
	6. Port Mirroring

Operational Requirements	
Description	Parameters
Optical Port Configuration	1. 100Base-FX (Single Mode fiber) (1300nm)
	2. 8 Miles Minimum Distance for SM 100FX
	3. 18 Miles Minimum Distance for SM 1000LH
	4. Automatic and User-selectable half/full duplex setting
	5. Port Aggregation with VLAN support
	6. Port Mirroring

Management and Control Function Requirements
1. HTTPS/Web Browser Based Management Interface
2. Telnet and SSH for Remote Management (option to disable protocols)
3. TFTP, SFTP or FTP for Remote Firmware Upgrades (option to disable protocols)
4. SNMPv3 for Network Management
5. Console Connection for Local Management
6. Packet Filtering and Port Security
7. Text Based Command Line Interface
8. Text Based Configuration Files (passwords encrypted)
9. Radius authentication support
10. Syslog and Trap server support
11. Access Control List (ACL) support

Operational Requirements	
Description	Parameters
Layer 3 Routing	1. Static Routing, RIP (v1, v2), OSPF (v2)
	2. IGMP (v1, v2 and v3) and IGMP Snooping.
	3. PIM-SM, PIM-DM and DVMRP
	5. TCP/IP Stack
	7. VRRP (v2) Layer-3 Routing (IPv6) IP Routing
	8. Routed 32 bit Loopback interface support

Protocol Requirements
1. Institute of Electrical and Electronics Engineers (IEEE) 802.3
2. IEEE 802.3u 100Base-FX
3. IEEE 802.3x Flow Control
4. IEEE 802.1Q Virtual Local Area Network (VLAN) Tagging
5. IEEE 802.1D Spanning Tree Protocol (STP, RSTP, MSTP)
6. IEEE 802.1P Quality of Service (QoS)
7. IEEE 802.3u 100Base-T
8. IEEE 802.1AB Link Layer Discovery Protocol (LLDP)
9. IEEE 802.1x Port-Based Authentication

Minimum LED Status Indications
Power
Link
Fiber Port Status

Environmental Requirements	
Description	Parameter
Operating Temperature Range	From -10 to +70 C
Relative Humidity	From 10 to 95 percent, non-condensing
Hardened	Meet NEMA TS-1/TS-2 Standard

87-25.05 CONSTRUCTION

The installation of the switch must be according to the manufacturer's instructions.
Deliver switch to the TMC a minimum of 3 weeks prior to installation in the field for configuration:

District 8 – Inland Empire TMC
13892 Victoria Street
Fontana, CA 92336

87-25.06 PAYMENT

Not Used

87-26 ETHERNET SWITCH + POE

87-26.01 General

87-26.01A Summary

Section 87-26.01 includes specifications for furnishing and installing the Ethernet Switch + POE (ES + POE).

87-26.01B Definitions

CLI: A Command-Line Interface is a means of interaction with a computer program where the user issues commands to a program in the form of successive lines of text.

DHCP: The Dynamic Host Configuration Protocol is a network protocol to configure network devices so that they can communicate on an IP network.

DNS: Domain Name System/Server is an Internet service that translates domain names into IP addresses.

IP: Internet Protocol, a communications protocol for computers connected to a network specifying the format for addresses and units of transmitted data.

SNMP: Simple Network Management Protocol is an Internet-standard protocol for managing devices on IP networks.

TIA: Telecommunications Industry Association. The standard address commercial building cabling for telecommunications products and services.

PoE+ / PoE: Power Over Ethernet IEEE 802.3at and IEEE 802.3af standards provides power on a standard Category 5 cable.

87-26.01C Submittals

Submit a draft copy of all documentation for review and approval before production of documentation. The Engineer will review and approve or reject the draft documentation within 2 weeks of receipt.

Submit two copies of all final documents. The copies must be 8.5 inches by 11 inches and bound in three-ring, hard-covered binders, complete with dividers.

Documentation must consist of the following types of manuals and drawings and must include the information described.

1. Configuration of Hardware and Software Documentation
   1.1. Provide proper documentation for all configurations of hardware and software.

2. Test Results
   2.1. The test result section of the operations and maintenance must include a copy of the results for all the tests that you have conducted. Detailed test requirements are listed under the Quality Control section.

87-26.01D Quality Assurance

87-26.01D(1) General

Not Used.

87-26.01D(2) Warranty

Furnish a 5 year replacement warranty from the manufacturer against any defects in materials or workmanship. The effective date of the warranty is the date of contract acceptance. Replacement parts must arrive within 5 business days after receipt of the failed parts. The Department does not pay for replacement parts. Deliver replacement parts to:

District 8 – Inland Empire TMC
13892 Victoria Street
Fontana, CA 92336

87-26.01E Quality Control

87-26.01E(1) General

Not Used.

87-26.01E(1)(a) Data Integration Testing

You must test all material, equipment, and cable after installation. These tests must comply with the "Performance Testing" sub-sections for each individual item where applicable.

You must supply all test equipment required.

Switches and routing equipment must be delivered to the TMC for configuration, a minimum of 2 weeks prior to installation in the field.
You must configure all other equipment prior to testing or installation in the field.
The following network information will be supplied:

1. IP addresses
2. Mask
3. Gateway
4. Replacement Administrative Password
5. SNMP Community Strings
6. Wireless Security Settings (when applicable)

You must submit an installation and test plan which details the method of installation and site testing for all material, equipment, and cable and the associated schedule of activities. Two copies of the installation and test plan must be submitted for approval, at least 2 weeks before proposed testing dates.

The equipment and hardware must be installed as shown and described. Tests and inspections must include:

1. Visual inspection for damaged or incorrect installation.
2. Measurement of parameters and operating conditions.

These tests must be performed in accordance with the approved installation and test plan.
You must notify the Engineer of your intent to proceed with installation and testing 48 hours before commencement of each test.

87-26.01E(1)(b) Physical Inspection

You must provide documentation to prove delivery of all material, equipment, cable and documentation. If any material or documentation is outstanding or have been replaced under pre-acceptance warranty a physical inspection and documentation must be provided for this material. The physical inspection must consist of inspecting all installed material to ensure that workmanship satisfies the specified requirements.

87-26.01E(1)(c) Data Link Testing

To verify all the communication equipment is properly connected and responding to the assigned IP addresses, the acceptance testing for each device consists of the following steps:

5. From the Inland Empire Transportation Management Center (TMC), with the communication system functioning under normal conditions, each device must respond as follows:

    J. The device must respond correctly to an Internet Control Message Protocol (ICMP) echo requests from the District TMC.

    K. The device must be turned OFF. An ICMP echo request from the District TMC must then be sent and the device must not be responsive.

    L. The device must then be turned ON. An ICMP echo request from the District TMC must be then be sent and the device must be responsive. At least five consecutive responses without packet loss are required to be considered a successful test.

Verify that each device responds and record the response time for each request.

The Inland Empire TMC is located at:
13892 Victoria Street
Fontana, CA 92336

87-26.01E(5)(d) Acceptance Testing

Acceptance testing includes the preparation of an acceptance test plan, conducting acceptance tests and subsequent retests, and documentation of the results.

Final acceptance tests must be conducted after the site test results have been reviewed and accepted. These tests include the complete system in normal operations.

The acceptance test plan must detail all tests to be performed, the test results which are expected and the test schedule. The acceptance test plan will include the following major tests and acceptance categories:

1. Successful acceptance of Subsystem testing
2. Performance tests after connecting the system.
3. Functional tests after connecting the system.

All acceptance test results must be fully documented and such documentation provided as a condition of acceptance.

87-26.01E(5)(e) Performance Tests

Performance tests must document the following:

1. Average TCP and UDP upstream and downstream Bandwidth
2. Average UDP upstream and downstream percent of packet loss
3. Average round trip time (RTT) or latency
4. Standard Deviation or a graph of each test over the time of the test
5. Location being tested with source IP address used in the test

You must conduct operational performance tests on the following:

1. From each field element endpoint to the TMC time sever or other approved equipment in TMC.

87-26.01E(5)(f) Final Acceptance

The system will not be accepted until all of the following conditions have been met as follows:

1. Physical, performance, and functional acceptance tests have been completed and the results are approved.
2. All documentation has been completed and submitted.
3. All connections that were changed to perform acceptance tests are restored and tested to form a fully operational system.

87-26.02 MATERIALS

87-26.02A General

Physical Requirements	
Description	Parameter
Ethernet Electrical Ports	Minimum 6 (IEEE 802.3 af/at PoE)(10/100 BASE-TX)
Console Port	1
Input Voltage	48 VDC,
Power Consumption	<8 watts (with no POE)
Power Budget with POE	>100 watts

Operational Requirements	
Description	Parameters
Port Configuration	1. 10/100 Base-TX
	2. RJ-45 Female Connector
	3. Automatic and User-selectable speed setting
	4. Automatic and User-selectable half/full duplex setting
	5. Port Aggregation with VLAN support
	6. Port Mirroring
	7. POE power utilization

Management and Control Function Requirements
1. HTTPS/Web Browser Based Management Interface
2. Telnet and SSH for Remote Management (option to disable protocols)
3. TFTP, SFTP or FTP for Remote Firmware Upgrades (option to disable protocols)
4. SNMPv3 for Network Management
5. Console Connection for Local Management
6. Packet Filtering and Port Security
7. Text Based Command Line Interface
8. Text Based Configuration Files (passwords encrypted)
9. POE output control (off and on per port)
10. Radius authentication support
11. Syslog and Trap server support

Protocol Requirements
1. Institute of Electrical and Electronics Engineers (IEEE) 802.3
2. IEEE 802.3u 100Base-T
3. IEEE 802.3x Flow Control
4. IEEE 802.1Q Virtual Local Area Network (VLAN) Tagging
5. IEEE 802.1D Spanning Tree Protocol (STP, RSTP, MSTP)
6. IEEE 802.1p Quality of Service (QoS)
7. IEEE 802 1AB Link Layer Discovery Protocol (LLDP)
8. IEEE 802.3af/at for Power-over-Ethernet
9. IEEE 802.1x Port-Based Authentication

Environmental Requirements	
Description	Parameter
Operating Temperature Range	From -10 to +670 °C
Relative Humidity	From 10 to 95 percent, Non-condensing
Hardened	Meet NEMA TS-1/TS-2 Standard

87-26.02A(1) Power Supply

The power supply, when needed, for each ES + POE must be approved by the manufacturer and be compatible with the voltage and power type (V(dc) or V(ac)) provided at each location. The power supply must operate in the same physical environment. The power supply can be integrated into the ES + POE.

The power supply must be able to fully power the device, the potential load capacity of the combined POE ports, and any other devices that are approved to be connected to the power supply by the Engineer.

87-26.03 CONSTRUCTION

The ES + POE must be the DIN rail mount type. The placement of the ES + POE must allow for provisions for cable installation and maintenance.

87-26.04 PAYMENT

Not Used

APPENDIX A

ADDITIVE ALTERNATE BID NO. 2 – ROCK MULCH & EROSION CONTROL

APPROVED AS TO IMPACT ON STATE FACILITIES AND CONFORMANCE WITH APPLICABLE STATE STANDARDS AND PRACTICES AND THAT TECHNICAL OVERSIGHT WAS PERFORMED.

CALTRANS DESIGN OVERSIGHT APPROVAL: AYSHA HABIB — A. Habib — DATE SIGNED: 10/05/2020

CONSULTANT DESIGN MANAGER: KEVIN MICHALSKI — REGISTRATION No.: 79619 — LICENSE Exp DATE: 09/30/22

INDEX OF PLANS

SHEET No.	DESCRIPTION
1	TITLE AND LOCATION MAP
2-12	TYPICAL CROSS SECTIONS
13	KEY MAP AND LINE INDEX
14	PROJECT CONTROL PLAN
15-20	LAYOUTS
21-30	PROFILES AND SUPERELEVATION DIAGRAMS
31-66	CONSTRUCTION DETAILS
67	TEMPORARY WATER POLLUTION CONTROL QUANTITIES
68-73	CONTOUR GRADING
74-111	DRAINAGE PLANS, PROFILES, DETAILS AND QUANTITIES
112-120	UTILITY PLANS AND QUANTITIES
121	CONSTRUCTION AREA SIGNS
122-136	MOTORIST INFORMATION PLANS
137-141	STAGE CONSTRUCTION PLANS
142-181	TRAFFIC HANDLING PLANS AND QUANTITIES
182-190	PAVEMENT DELINEATION PLANS, DETAILS AND QUANTITIES
191-211	SIGN PLANS, DETAILS AND QUANTITIES
212-217	SUMMARY OF QUANTITIES
218	IRRIGATION SPRINKLER SCHEDULE
219-234	IRRIGATION PLANS, DETAILS AND QUANTITIES
235	PLANTING LEGEND
236-249	PLANTING PLANS, DETAILS AND QUANTITIES
250	EROSION CONTROL LEGEND
251-256	EROSION CONTROL PLANS
257-294	ELECTRICAL PLANS, DETAILS AND QUANTITIES
295-298	CITY OF MORENO VALLEY CONDUIT EXTENSION PLANS
299-300	EASTERN MUNICIPAL WATER DISTRICT RELOCATION PLANS
301-318	IRONWOOD AVENUE STORM DRAIN LINE K-1 PLANS

STRUCTURE PLANS

319-358	MORENO BEACH Dr OC (REPLACE) Br No. 56-0845

STATE OF CALIFORNIA
DEPARTMENT OF TRANSPORTATION

PROJECT PLANS FOR CONSTRUCTION ON
STATE HIGHWAY

IN RIVERSIDE COUNTY
IN MORENO VALLEY
FROM 0.3 MILE WEST TO 0.5 MILE EAST OF MORENO BEACH DRIVE OVERCROSSING

TO BE SUPPLEMENTED BY STANDARD PLANS DATED 2018

Dist	COUNTY	ROUTE	POST MILES TOTAL PROJECT	SHEET No.	TOTAL SHEETS
08	Riv	60	18.8/19.6	1	358

LOCATION MAP

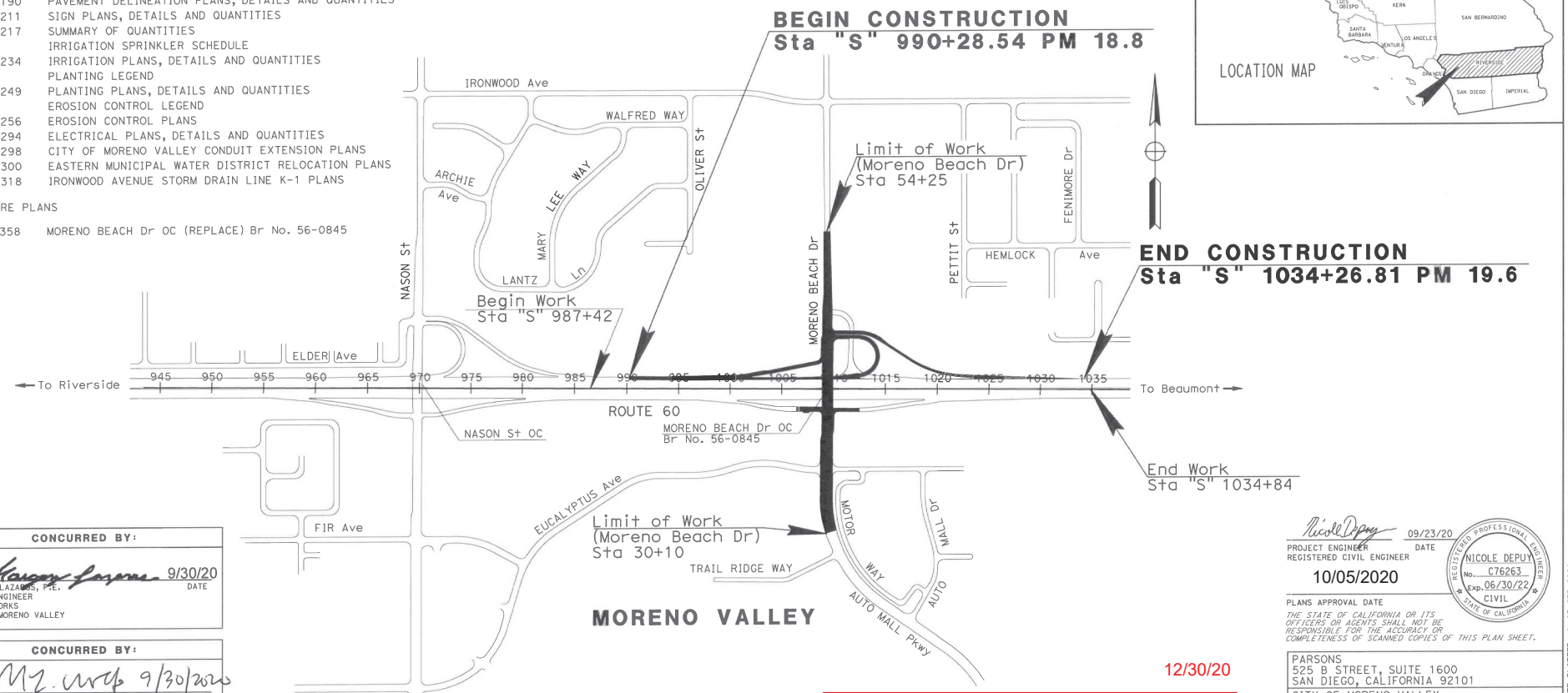

NO SCALE

CONCURRED BY:

Margery Lazarus 9/30/20
MARGERY LAZARUS, P.E. — DATE
SENIOR ENGINEER
PUBLIC WORKS
CITY OF MORENO VALLEY

CONCURRED BY:

M.Z. Wolfe 9/30/2020
MICHAEL WOLFE, P.E. — DATE
PUBLIC WORKS DIRECTOR/CITY ENGINEER
CITY OF MORENO VALLEY

THE CONTRACTOR SHALL POSSESS THE CLASS (OR CLASSES) OF LICENSE AS SPECIFIED IN THE "NOTICE TO BIDDERS."

Nicole Depuy 09/23/20
PROJECT ENGINEER — DATE
REGISTERED CIVIL ENGINEER

10/05/2020
PLANS APPROVAL DATE

REGISTERED PROFESSIONAL ENGINEER — NICOLE DEPUY — No. C76263 — Exp. 06/30/22 — CIVIL — STATE OF CALIFORNIA

THE STATE OF CALIFORNIA OR ITS OFFICERS OR AGENTS SHALL NOT BE RESPONSIBLE FOR THE ACCURACY OR COMPLETENESS OF SCANNED COPIES OF THIS PLAN SHEET.

12/30/20

Alternative Bid Concept
(Removal of Planting & Irrigation)

PARSONS
525 B STREET, SUITE 1600
SAN DIEGO, CALIFORNIA 92101

CITY OF MORENO VALLEY
14177 FREDERICK STREET
MORENO VALLEY, CALIFORNIA 92552

CONTRACT No.	08-323034
PROJECT ID	0812000059

LAST REVISION — DATE PLOTTED => 23-SEP-2020

BORDER LAST REVISED 8/1/2016 | CALTRANS WEB SITE IS: HTTP://WWW.DOT.CA.GOV/ | RELATIVE BORDER SCALE 0 1 2 3 | USERNAME => p007781A | UNIT 2232 | PROJECT NUMBER & PHASE 0812000059

Dist	COUNTY	ROUTE	POST MILES TOTAL PROJECT	SHEET No.	TOTAL SHEETS
08	Riv	60	18.8/19.6	218	358

LICENSED LANDSCAPE ARCHITECT

PLANS APPROVAL DATE

THE STATE OF CALIFORNIA OR ITS OFFICERS OR AGENTS SHALL NOT BE RESPONSIBLE FOR THE ACCURACY OR COMPLETENESS OF SCANNED COPIES OF THIS PLAN SHEET.

LICENSED LANDSCAPE ARCHITECT ERIC FREEMAN #6245 SIGNATURE EXP. 12/31/22 5-1-20 DATE STATE OF CALIFORNIA

EMERALD DESIGN
305 N. HARBOR BLVD. SUITE 222
FULLERTON, CA 92832

CITY OF MORENO VALLEY
14177 FREDERICK STREET
MORENO VALLEY, CALIFORNIA 92552

IRRIGATION SPRINKLER SCHEDULE

SYMBOL.	ITEM DESCRIPTION	SPRAY PATTERN	RADIUS ft	OPERATING PRESSURE psi	DISCHARGE RATE (+/-) 5%) GPM	PRECIPITATION RATE (+/-) 5%) INCH/hr	INLET CONNECTION DIAMETER INCH	SWING JOINT TYPE	RISER SPRINKLER ASSEMBLY TYPE	RISER SPRINKLER ASSEMBLY HEIGHT INCH	POP-UP SPRINKLER ASSEMBLY MATERIAL	POP-UP SPRINKLER ASSEMBLY INCH	REMARKS
4	SHRUB BUBBLER	-	-	30	0.5	-	3/4	II	v	-	PL		INSTALL (1) PER EACH SHRUB
5	POP UP SPRINKLER'S	P	12	30	.36	1.0	3/4	I	-	-	PL	12"	INSTALL SPRINKLER PROTECTOR TYPE I ③
5	POP UP SPRINKLER'S	H	12	30	.74	1.0	3/4	I	-	-	PL	12"	INSTALL SPRINKLER PROTECTOR TYPE I ③
O	TREE BUBBLER	-	-	30	.50	-	3/4	III	-	12"	PL		INSTALL (2) BUBBLERS PER TREE ① ②

PIPE SIZING SCHEDULE

SHRUB BUBBLER	
PIPE SIZE	QTY OF NOZZLES
1"	0-24
1-1/4"	25-44
1-1/2"	45-60

TREE BUBBLER	
PIPE SIZE	QTY OF NOZZLES
1"	0-24
1-1/4"	25-44

POP-UP SPRINKLER'S	
PIPE SIZE	QUANTITY OF NOZZLES
1"	0-16
1-1/4"	17-29
1-1/2"	30-40

SHRUB BUBBLER ③
TYPICAL IRRIGATION
(SEE SHEETS IP-2 & IP-3)

NOTES:

① - INCLUDE AN INTERNAL OR EXTERNAL CHECK VALVE
② - NON ADJUSTABLE DISCHARGE RATE
③ - INSTALL ONLY WHERE SPRINKLER IS ADJACENT TO ROADWAY

DELETE SHEET

IRRIGATION SPRINKLER SCHEDULE

ISS-1

STATE OF CALIFORNIA - DEPARTMENT OF TRANSPORTATION
Caltrans

CONSULTANT SENIOR LANDSCAPE ARCHITECT: CHARLES SEAMONS LAMB
CALCULATED-DESIGNED BY: SAMUEL MEJIA
CHECKED BY: KEN LUDINGTON
REVISED BY
DATE REVISED

LAST REVISION 12-03-19
DATE PLOTTED => 17-AUG-2020
TIME PLOTTED => 16:06

NOTES:

1. FOR ACCURATE RIGHT OF WAY DATA, CONTACT RIGHT OF WAY ENGINEERING AT THE DISTRICT OFFICE.

2. FOR CONTROLLER AND POINT OF CONNECTION INFORMATION SEE SHEET IQ-2

ABBREVIATIONS

POC = POINT OF CONNECTION
BV = BALL BUBBLER
SLV = SLEEVE REMOTE

Dist	COUNTY	ROUTE	POST MILES TOTAL PROJECT	SHEET No.	TOTAL SHEETS
08	Riv	60	18.8/19.6	219	358

LICENSED LANDSCAPE ARCHITECT

PLANS APPROVAL DATE

THE STATE OF CALIFORNIA OR ITS OFFICERS OR AGENTS SHALL NOT BE RESPONSIBLE FOR THE ACCURACY OR COMPLETENESS OF SCANNED COPIES OF THIS PLAN SHEET.

LICENSED LANDSCAPE ARCHITECT ERIC FREEMAN FREEMAN 5-1-20 DATE STATE OF CALIFORNIA

EMERALD DESIGN
305 N. HARBOR BLVD. SUITE 222
FULLERTON, CA 92832

CITY OF MORENO VALLEY
14177 FREDERICK STREET
MORENO VALLEY, CALIFORNIA 92552

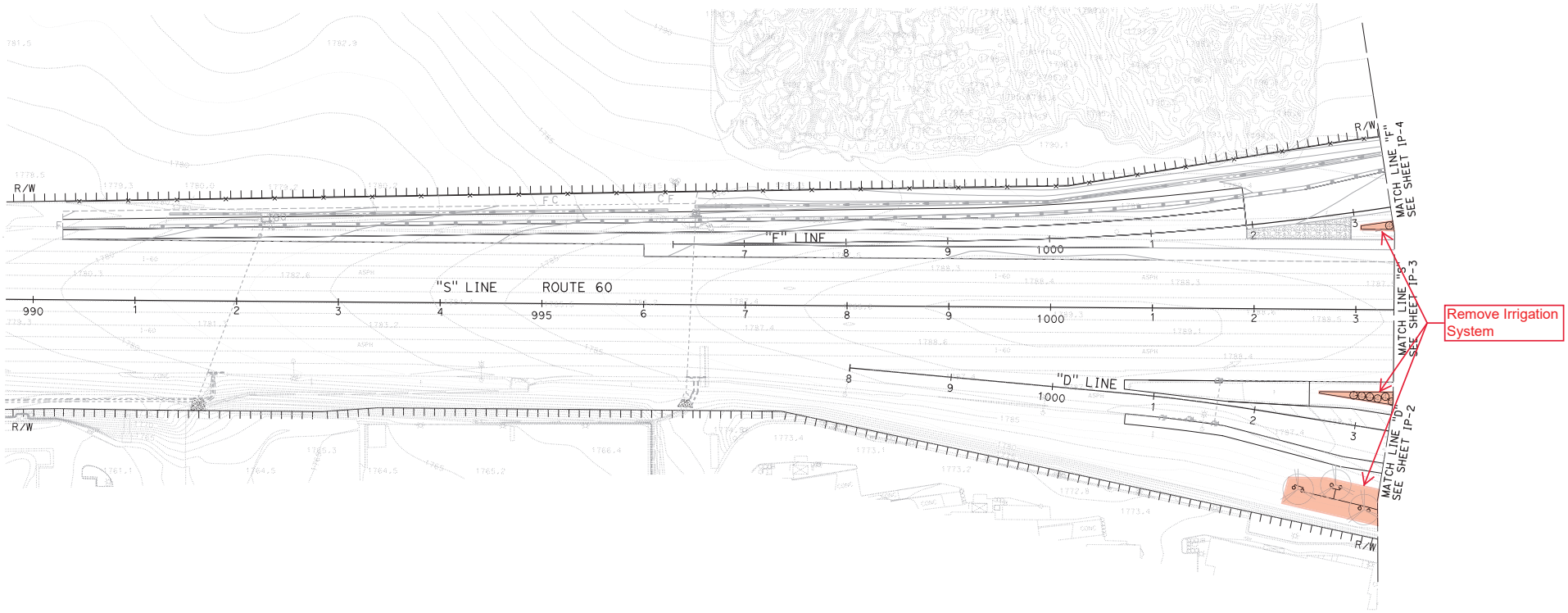

APPROVED FOR IRRIGATION WORK ONLY

IRRIGATION PLAN

SCALE: 1" = 50'

IP-1

STATE OF CALIFORNIA - DEPARTMENT OF TRANSPORTATION | CONSULTANT SENIOR LANDSCAPE ARCHITECT: CHARLES SEAMONS LAMB | CALCULATED-DESIGNED BY: SAMUEL MEJIA | CHECKED BY: KEN LUDINGTON | REVISED BY | DATE REVISED

LAST REVISION 12-03-19 | DATE PLOTTED => 17-AUG-2020 | TIME PLOTTED => 16:07

BORDER LAST REVISED 7/2/2010 | USERNAME => kj | DGN FILE => 0812000059sp001.dgn | RELATIVE BORDER SCALE IS IN INCHES 0 1 2 3 | UNIT 2232 | CU 08224 | EA 323031

NOTES:

1. FOR ACCURATE RIGHT OF WAY DATA, CONTACT RIGHT OF WAY ENGINEERING AT THE DISTRICT OFFICE.
2. FOR CONTROLLER AND POINT OF CONNECTION INFORMATION SEE SHEET IQ-2.
3. FOR CONTROLLER COMMUNICATION TO THE NETWORK, SEE SHEET (ED-7)
4. FOR EXISTING PRESSURE, AND PRESSURE CALCULATIONS, SEE SHEET IQ-3
5. SEE DETAIL FOR YAGI ANTENNA ON SHEET ID-1

Dist	COUNTY	ROUTE	POST MILES TOTAL PROJECT	SHEET No.	TOTAL SHEETS
08	Riv	60	18.8/19.6	220	358

LICENSED LANDSCAPE ARCHITECT

PLANS APPROVAL DATE

THE STATE OF CALIFORNIA OR ITS OFFICERS OR AGENTS SHALL NOT BE RESPONSIBLE FOR THE ACCURACY OR COMPLETENESS OF SCANNED COPIES OF THIS PLAN SHEET.

LICENSED LANDSCAPE ARCHITECT ERIC FREEMAN 6232 Exp 8-31-20 5-1-20 DATE STATE OF CALIFORNIA

EMERALD DESIGN
305 N. HARBOR BLVD. SUITE 222
FULLERTON, CA 92832

CITY OF MORENO VALLEY
14177 FREDERICK STREET
MORENO VALLEY, CALIFORNIA 92552

~~1 1/2" A 4 23.00 46~~
~~1 1/2" A 3 22.50 45~~
~~1 1/2" A 2 23.00 46~~
~~1 1/2" A 1 18.00 36~~

~~1 1/2" A 9 24.00 48~~
~~1" A 8 9.00 18~~
~~1 1/2" A 7 27.00 54~~

~~1" A 10 4.00 8~~
~~1 1/2" A 11 26.00 52~~
~~1 1/2" A 12 26.50 53~~

~~1" A 5 2.00 1~~
~~1 1/2" A 6 26.50 53~~

~~1 1/2" A 35 24.00 48~~
~~1" A 34 3.00 6~~

~~1 1/2" A 22 25.00 50~~
~~1" A 23 9.00 18~~
~~1 1/2" A 24 25.00 50~~
~~1 1/2" A 25 28.00 48~~
~~1 1/2" A 26 23.50 47~~

MATCH LINE "M" SEE SHEET IP-3

1005 ROUTE 60

"S" LINE

Remove Irrigation System (Except Sleeves as shown)

Remove Irrigation System (Except Sleeves as shown)

MATCH LINE "D" SEE SHEET IP-1

1005 "D" LINE

"E" LINE

MATCH LINE "E" SEE SHEET IP-4

3" IRRIGATION SUPPLY LINE SEE BRIDGE PLANS

3-1/2" SLV

2" BV

3" GV

12" SLV CHDPE

YAGI

MVP

3" GV
1" FS
2" RCVM
2" BPA
2" METER
3"
2" BV

R/W

Remove Irrigation System (Except Sleeves as shown)

Remove Irrigation System (Except Sleeves as shown)

~~Irr. Controller A 48 Sta, 45 Used~~

~~1 1/2" A 13 24.00 48~~
~~1 1/2" A 14 24.00 48~~
~~1 1/2" A 15 24.00 48~~
~~1 1/2" A 16 25.00 50~~
~~1" A 17 2.00 1~~

~~1 1/2" A 21 27.00 54~~
~~1 1/2" A 20 26.50 53~~
~~1 1/2" A 19 22.50 45~~
~~1" A 18 3.00 6~~

~~1 1/2" A 33 21.50 43~~
~~1 1/2" A 32 23.00 46~~
~~1 1/2" A 31 24.00 48~~
~~1 1/2" A 30 18.50 37~~

~~1 1/2" A 27 23.00 46~~
~~1 1/2" A 28 20.60 30~~
~~1" A 29 8.00 16~~

MORENO BEACH Dr

"M" LINE

"EU" LINE

EUCALYPTUS Aye

CITY R/W

NOTE: Irrigation sleeve ends to be capped for future use.

MATCH LINE "M" SEE SHEET IP-5

APPROVED FOR IRRIGATION WORK ONLY

IRRIGATION PLAN

SCALE: 1" = 50'

IP-2

REVISED BY	DATE REVISED
SAMUEL MEJIA	KEN LUDINGTON

CALCULATED-DESIGNED BY | CHECKED BY

CONSULTANT SENIOR LANDSCAPE ARCHITECT: CHARLES SEAMONS LAMB

STATE OF CALIFORNIA - DEPARTMENT OF TRANSPORTATION

Caltrans

LAST REVISION 12-03-19
DATE PLOTTED => 17-AUG-2020
TIME PLOTTED => 16:09

BORDER LAST REVISED 7/2/2010

USERNAME => kj
DGN FILE => 0812000059sp002.dgn

RELATIVE BORDER SCALE IS IN INCHES 0 1 2 3

UNIT 2232 | CU 08224 | EA 323031

NOTES:

1. FOR ACCURATE RIGHT OF WAY DATA, CONTACT RIGHT OF WAY ENGINEERING AT THE DISTRICT OFFICE.
2. FOR CONTROLLER AND POINT OF CONNECTION INFORMATION SEE SHEET IQ-2
3. FOR CONTROLLER COMMUNICATION TO THE NETWORK, SEE SHEET (ED-7)
4. CONTROLLER-B TO BE "PARENT" CONTROLLER FOR COMUNICATION.
5. SEE DETAIL FOR YAGI ANTENNA ON SHEET ID-1

NOTE: Irrigation sleeve ends to be capped for future use.

Remove Irrigation System (Except Sleeves as shown)

Remove Irrigation System (Except Sleeves as shown)

Remove Irrigation System (Except Sleeves as shown)

Remove Irrigation System (Except Sleeves as shown)

Dist	COUNTY	ROUTE	POST MILES TOTAL PROJECT	SHEET No.	TOTAL SHEETS
08	Riv	60	18.8/19.6	221	358

LICENSED LANDSCAPE ARCHITECT

PLANS APPROVAL DATE

THE STATE OF CALIFORNIA OR ITS OFFICERS OR AGENTS SHALL NOT BE RESPONSIBLE FOR THE ACCURACY OR COMPLETENESS OF SCANNED COPIES OF THIS PLAN SHEET.

LICENSED LANDSCAPE ARCHITECT ERIC FREEMAN 6525 SIGNATURE EXP 5/31/20 5-1-20 DATE STATE OF CALIFORNIA

EMERALD DESIGN
305 N. HARBOR BLVD. SUITE 222
FULLERTON, CA 92832

CITY OF MORENO VALLEY
14177 FREDERICK STREET
MORENO VALLEY, CALIFORNIA 92552

REVISED BY	DATE REVISED
SAMUEL MEJIA	
KEN LUDINGTON	
CALCULATED-DESIGNED BY	CHECKED BY
CHARLES SEAMONS LAMB	

CONSULTANT SENIOR LANDSCAPE ARCHITECT

STATE OF CALIFORNIA - DEPARTMENT OF TRANSPORTATION

Caltrans

IRRIGATION PLAN

SCALE: 1" = 50'

IP-3

APPROVED FOR IRRIGATION WORK ONLY

LAST REVISION 12-03-19

DATE PLOTTED => 17-AUG-2020
TIME PLOTTED => 16:11

BORDER LAST REVISED 7/2/2010

USERNAME => kj
DGN FILE => 0812000059sp003.dgn

RELATIVE BORDER SCALE IS IN INCHES 0 1 2 3

UNIT 2232 | CU 08224 | EA 323031

NOTES:

1. FOR ACCURATE RIGHT OF WAY DATA, CONTACT RIGHT OF WAY ENGINEERING AT THE DISTRICT OFFICE.

2. FOR CONTROLLER AND POINT OF CONNECTION INFORMATION SEE SHEET IQ-2

Dist	COUNTY	ROUTE	POST MILES TOTAL PROJECT	SHEET No.	TOTAL SHEETS
08	Riv	60	18.8/19.6	222	358

LICENSED LANDSCAPE ARCHITECT

PLANS APPROVAL DATE

THE STATE OF CALIFORNIA OR ITS OFFICERS OR AGENTS SHALL NOT BE RESPONSIBLE FOR THE ACCURACY OR COMPLETENESS OF SCANNED COPIES OF THIS PLAN SHEET.

LICENSED LANDSCAPE ARCHITECT ERIC FREEMAN #6245 SIGNATURE EXP. 12/31/22 5-1-20 DATE STATE OF CALIFORNIA

EMERALD DESIGN
305 N. HARBOR BLVD. SUITE 222
FULLERTON, CA 92832

CITY OF MORENO VALLEY
14177 FREDERICK STREET
MORENO VALLEY, CALIFORNIA 92552

~~1 1/2" B 12 14.00 28~~

~~1 1/2" B 13 34.00 48~~

~~1 1/2" B 14 15.00 30~~

~~1 1/2" B 15 15.00 30~~

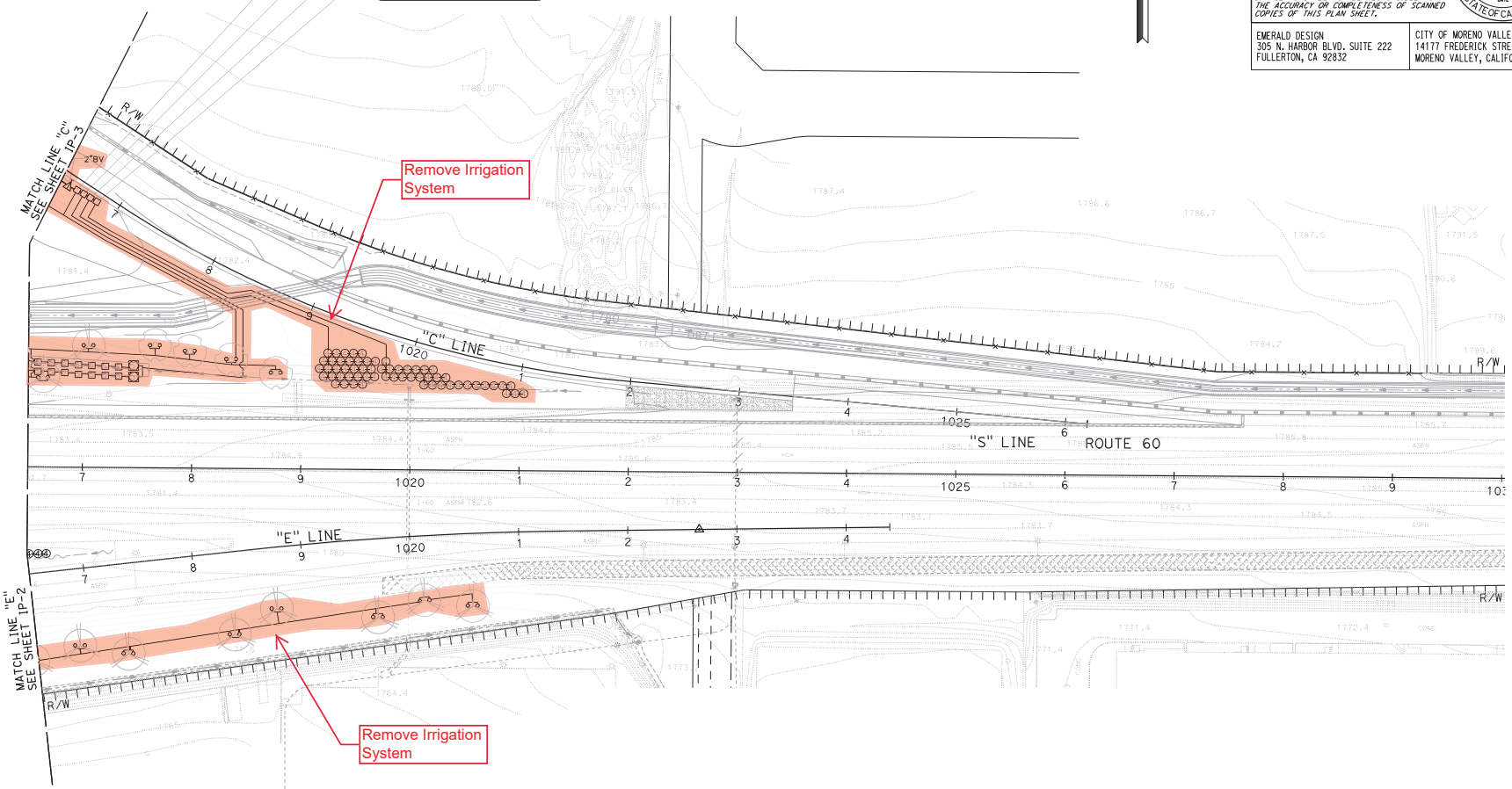

IRRIGATION PLAN

SCALE: 1" = 50'

IP-4

APPROVED FOR IRRIGATION WORK ONLY

STATE OF CALIFORNIA - DEPARTMENT OF TRANSPORTATION

Caltrans

CONSULTANT SENIOR LANDSCAPE ARCHITECT: CHARLES SEAMONS LAMB

CALCULATED-DESIGNED BY: SAMUEL MEJIA

CHECKED BY: KEN LUDINGTON

REVISED BY

DATE REVISED

LAST REVISION 12-03-19

DATE PLOTTED => 17-AUG-2020
TIME PLOTTED => 16:13

BORDER LAST REVISED 7/2/2010

USERNAME => kj
DGN FILE => 0812000059sp004.dgn

RELATIVE BORDER SCALE IS IN INCHES 0 1 2 3

UNIT 2232

CU 08224

EA 323031

Dist	COUNTY	ROUTE	POST MILES TOTAL PROJECT	SHEET No.	TOTAL SHEETS
08	Riv	60	18.8/19.6	223	358

LICENSED LANDSCAPE ARCHITECT

PLANS APPROVAL DATE

THE STATE OF CALIFORNIA OR ITS OFFICERS OR AGENTS SHALL NOT BE RESPONSIBLE FOR THE ACCURACY OR COMPLETENESS OF SCANNED COPIES OF THIS PLAN SHEET.

LICENSED LANDSCAPE ARCHITECT ERIC FREEMAN #6245 SIGNATURE EXP. 12/31/22 5-1-20 DATE STATE OF CALIFORNIA

EMERALD DESIGN
305 N. HARBOR BLVD. SUITE 222
FULLERTON, CA 92832

CITY OF MORENO VALLEY
14177 FREDERICK STREET
MORENO VALLEY, CALIFORNIA 92552

NOTES:

1. IMPROVEMENTS ARE OUTSIDE OF CALTRANS R/W. TO BE MAINTAINED BY THE CITY.
2. THIS PLAN IS DIAGRAMMATIC, THE ACTUAL LOCATION OF IRRIGATION EQUIPMENT INCLUDING BUT NOT LIMITED TO LATERAL LINES, VALVES, AND DRIP LINES SHALL BE LOCATED IN PLANTING AREAS WHENEVER POSSIBLE
3. CONTRACTOR TO CONTACT AUTO MALL REPRESENTATIVE PRIOR TO INSTALLING IRRIGATION IN MEDIAN AND CONNECTING TO POC.
4. CITY CONTACT: MORENO VALLEY SPECIAL DISTRICT TEL: 951-413-3480

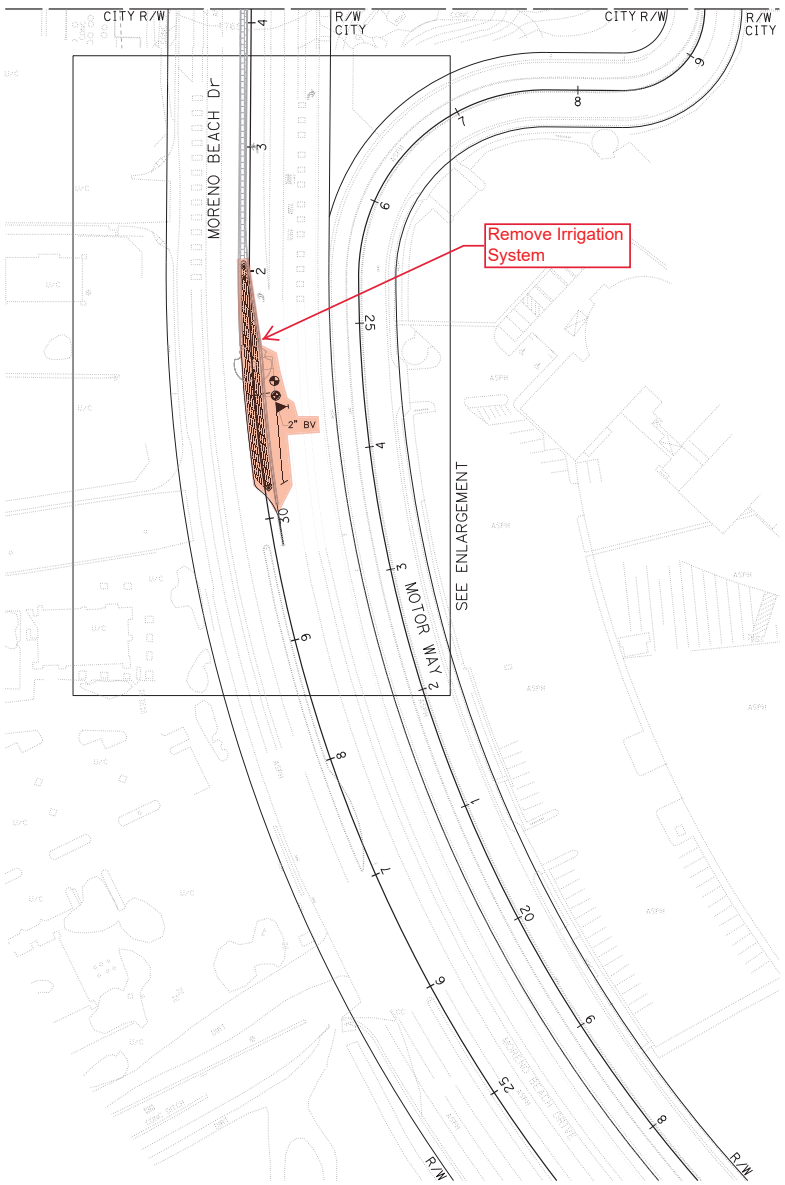

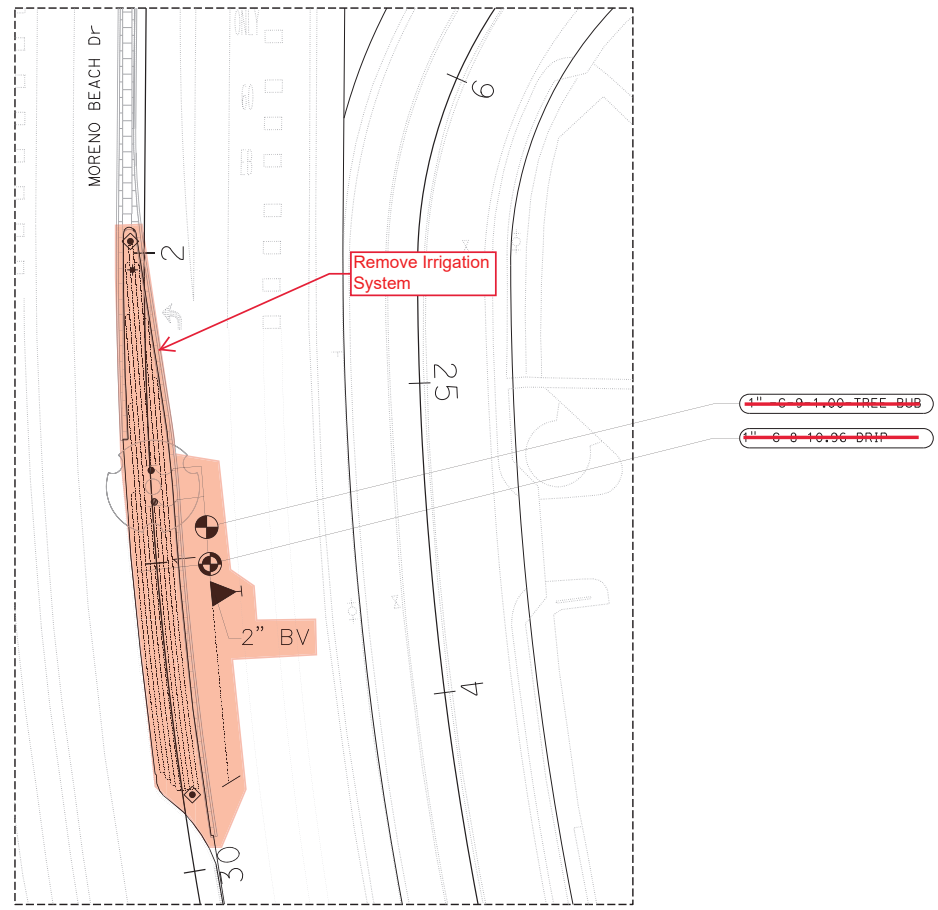

ENLARGEMENT - SCALE: 1" = 20'

APPROVED FOR IRRIGATION WORK ONLY

IRRIGATION PLAN

SCALE: 1" = 50'

IP-5

STATE OF CALIFORNIA - DEPARTMENT OF TRANSPORTATION

Caltrans

CONSULTANT SENIOR LANDSCAPE ARCHITECT: CHARLES SEAMONS LAMB

CALCULATED-DESIGNED BY: SAMUEL MEJIA

CHECKED BY: KEN LUDINGTON

REVISED BY

DATE REVISED

LAST REVISION 12-03-19

DATE PLOTTED => 17-AUG-2020
TIME PLOTTED => 16:14

BORDER LAST REVISED 7/2/2010

USERNAME => kj
DGN FILE => 0812000059sp005.dgn

RELATIVE BORDER SCALE IS IN INCHES 0 1 2 3

UNIT 2232

CU 08224

EA 323031

Dist	COUNTY	ROUTE	POST MILES TOTAL PROJECT	SHEET No.	TOTAL SHEETS
08	Riv	60	18.8/19.6	224	358

LICENSED LANDSCAPE ARCHITECT

PLANS APPROVAL DATE

THE STATE OF CALIFORNIA OR ITS OFFICERS OR AGENTS SHALL NOT BE RESPONSIBLE FOR THE ACCURACY OR COMPLETENESS OF SCANNED COPIES OF THIS PLAN SHEET.

LICENSED LANDSCAPE ARCHITECT ERIC FREEMAN #6245 SIGNATURE EXP. 12/31/22 5-1-20 DATE STATE OF CALIFORNIA

EMERALD DESIGN
305 N. HARBOR BLVD. SUITE 222
FULLERTON, CA 92832

CITY OF MORENO VALLEY
14177 FREDERICK STREET
MORENO VALLEY, CALIFORNIA 92552

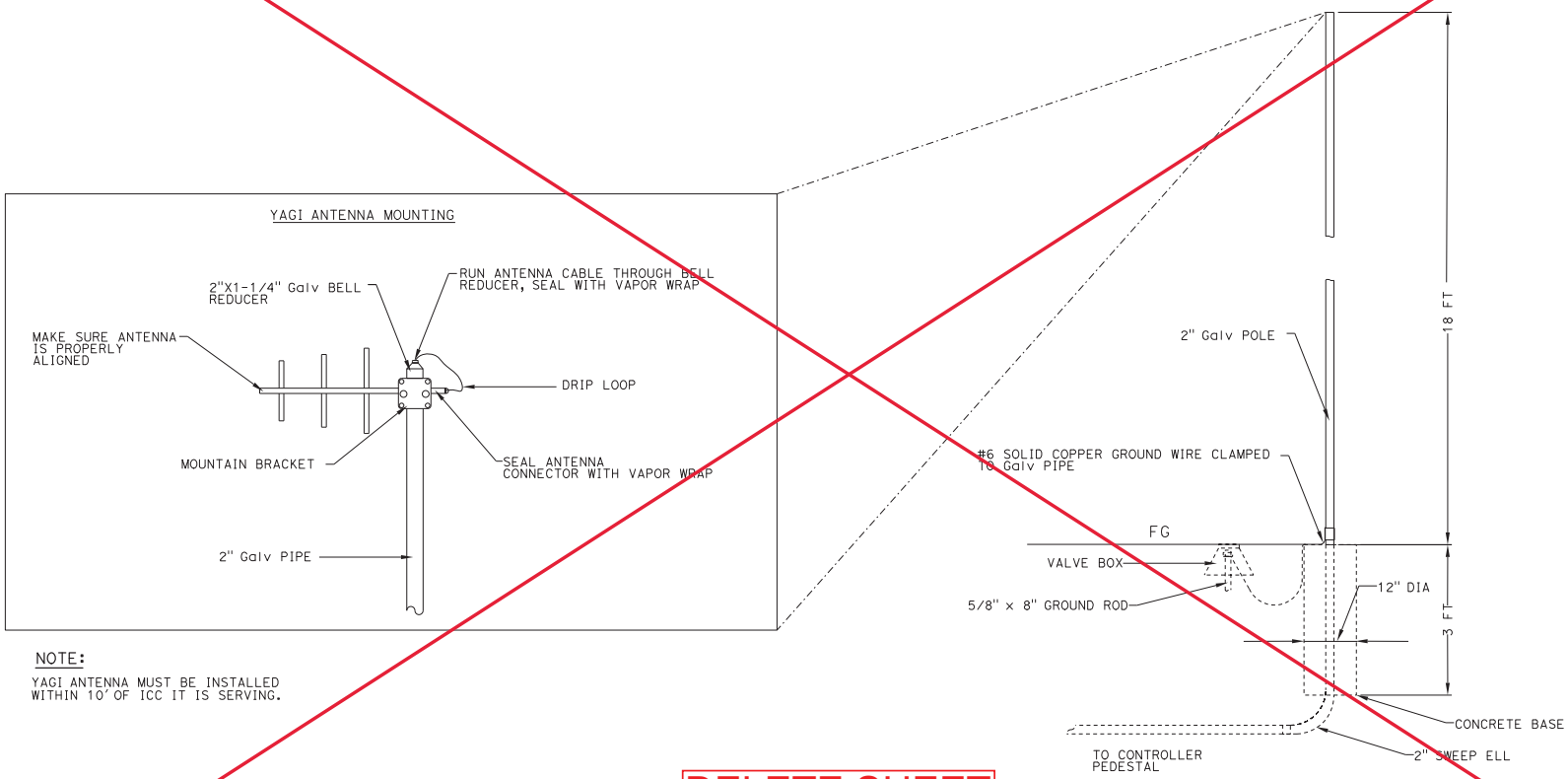

NOTE:

YAGI ANTENNA MUST BE INSTALLED WITHIN 10' OF ICC IT IS SERVING.

DELETE SHEET

YAGI ANTENNA DETAIL

N.T.S

IRRIGATION DETAILS ID-1

STATE OF CALIFORNIA - DEPARTMENT OF TRANSPORTATION

Caltrans

CONSULTANT SENIOR LANDSCAPE ARCHITECT: CHARLES SEAMONS LAMB

CALCULATED-DESIGNED BY: SAMUEL MEJIA

CHECKED BY: KEN LUDINGTON

REVISED BY

DATE REVISED

LAST REVISION 12-03-19

DATE PLOTTED => 17-AUG-2020

TIME PLOTTED => 16:16

BORDER LAST REVISED 7/2/2010

USERNAME => kj
DGN FILE => 0812000059sq001.dgn

RELATIVE BORDER SCALE IS IN INCHES 0 1 2 3

UNIT 2232

CU 08224

EA 323031

Dist	COUNTY	ROUTE	POST MILES TOTAL PROJECT	SHEET No.	TOTAL SHEETS
08	Riv	60	18.8/19.6	225	358

LICENSED LANDSCAPE ARCHITECT

PLANS APPROVAL DATE

THE STATE OF CALIFORNIA OR ITS OFFICERS OR AGENTS SHALL NOT BE RESPONSIBLE FOR THE ACCURACY OR COMPLETENESS OF SCANNED COPIES OF THIS PLAN SHEET.

LICENSED LANDSCAPE ARCHITECT ERIC FREEMAN #6245 SIGNATURE EXP. 12/31/22 5-1-20 DATE STATE OF CALIFORNIA

EMERALD DESIGN
305 N. HARBOR BLVD. SUITE 222
FULLERTON, CA 92832

CITY OF MORENO VALLEY
14177 FREDERICK STREET
MORENO VALLEY, CALIFORNIA 92552

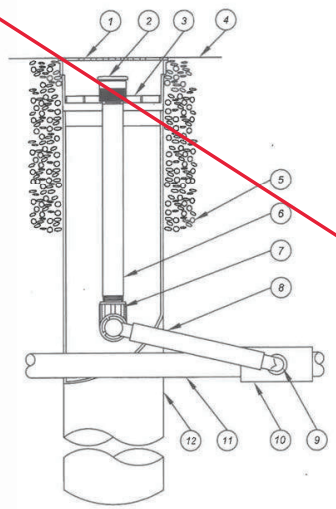

1. 4-INCH GRATE (INCLUDED)
2. BUBBLER: RAIN BIRD 1402 0.50 GPM OR AS REQUESTED (INCLUDED)
3. ROOT WATERING SYSTEM: RAIN BIRD RWS-BCG02 OR AS SPECIFIED (INCLUDES 1402 0.50 GPM BUBBLER WITH RISER, GRATE, SWING ASSEMBLY, 1/2" MALE NPT INLET, CHECK VALVE, AND BASKET CANISTER)
4. FINISH GRADE
5. 3/4" ROCK AND RWS SAND SOCK (RWS-SOCK)
6. 1/2-INCH PVC SCH 80 NIPPLE (INCLUDED)
7. 1/2-INCH 90-DEGREE ELBOW (INCLUDED)
8. 12-INCH SWING ASSEMBLY (INCLUDED)
9. 1/2-INCH MALE NPT INLET (INCLUDED)
10. PVC SCH 40 TEE OR ELL
11. LATERAL PIPE
12. 4-INCH BASKET WEAVE CANISTER (INCLUDED)

NOT TO SCALE

CITY OF MORENO VALLEY
PARKS AND COMMUNITY SERVICES DEPARTMENT

RECOMMENDED: DIVISION MANAGER 6/20/19 DATE
APPROVED: PUBLIC WORKS DIRECTOR/ CITY ENGINEER 7/30/19 DATE

RAINBIRD RWS - BCG02 ROOT WATERING SYSTEM

STANDARD PLAN **MVLI-566-0**
SHEET 1 OF 1

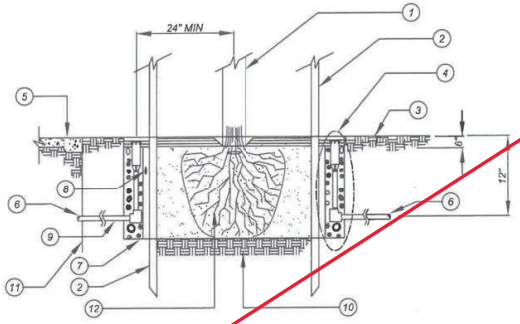

LEGEND:

1. TREE TRUNK
2. 2" LODGE POLE STAKES (PER CITY STANDARDS)
3. FINISH GRADE: TO BE DETERMINED AND APPROVED BY PARKS AND COMMUNITY SERVICES IN THE FIELD
4. ROOT WATERING SYSTEM (RWS) WITH MFG. DRAIN SOCK (PER PLAN AS SPECIFIED), CONNECT TO LATERAL LINE PER MANUFACTURER'S RECOMMENDATIONS, AND AS APPROVED BY PARKS AND COMMUNITY SERVICES. FILL WITH 3/4" AGGREGATE TO SPECIFIED LEVEL
5. CONCRETE SIDEWALK
6. NON-PRESSURE LATERAL LINE
7. PLANTING PIT: 2 TIMES WIDTH OF ROOTBALL AND SAME DEPTH AS ROOTBALL
8. PLANT TABLETS PER MANUFACTURER'S RECOMMENDATIONS (DISTRIBUTED AROUND ROOTBALL)
9. CONNECT TO LATERAL LINE PER MANUFACTURER'S RECOMMENDATIONS, AND AS APPROVED BY PARKS AND COMMUNITY SERVICES
10. UNDISTURBED NATIVE SOIL
11. INSTALL VERTICAL ROOT BARRIER PER MFG. INSTRUCTIONS (WHERE SPECIFIED)
12. ROOTBALL

NOTES:

1) SUPPLEMENTAL TREE IRRIGATION: 3 RWS FOR 15 GALLON TREES AND LARGER.

NOT TO SCALE

CITY OF MORENO VALLEY
PARKS AND COMMUNITY SERVICES DEPARTMENT

RECOMMENDED: DIVISION MANAGER 6/20/19 DATE
APPROVED: PUBLIC WORKS DIRECTOR/ CITY ENGINEER 7/30/19 DATE

DEEP WELL TREE IRRIGATION

STANDARD PLAN **MVLI-563B-0**
SHEET 2 OF 2

DELETE SHEET

IRRIGATION DETAILS

CITY OF MORENO VALLEY STANDARD PLANS

ID-2

STATE OF CALIFORNIA - DEPARTMENT OF TRANSPORTATION
Caltrans

CONSULTANT SENIOR LANDSCAPE ARCHITECT: CHARLES SEAMONS LAMB
CALCULATED-DESIGNED BY: SAMUEL MEJIA
CHECKED BY: KEN LUDINGTON
REVISED BY
DATE REVISED

LAST REVISION 12-03-19
DATE PLOTTED => 17-AUG-2020
TIME PLOTTED => 16:19

BORDER LAST REVISED 7/2/2010
USERNAME => kj
DGN FILE => 0812000059sq002.dgn
RELATIVE BORDER SCALE IS IN INCHES 0 1 2 3
UNIT 2232
CU 08224
EA 323031

Dist	COUNTY	ROUTE	POST MILES TOTAL PROJECT	SHEET No.	TOTAL SHEETS
08	Riv	60	18.8/19.6	226	358

LICENSED LANDSCAPE ARCHITECT

PLANS APPROVAL DATE

THE STATE OF CALIFORNIA OR ITS OFFICERS OR AGENTS SHALL NOT BE RESPONSIBLE FOR THE ACCURACY OR COMPLETENESS OF SCANNED COPIES OF THIS PLAN SHEET.

LICENSED LANDSCAPE ARCHITECT ERIC FREEMAN #6245 SIGNATURE EXP. 12/31/22 5-1-20 DATE STATE OF CALIFORNIA

EMERALD DESIGN
305 N. HARBOR BLVD. SUITE 222
FULLERTON, CA 92832

CITY OF MORENO VALLEY
14177 FREDERICK STREET
MORENO VALLEY, CALIFORNIA 92552

NOTE:

VALVE BOX COVERS MUST BE PURPLE IN COLOR (PANATONE 522C) AND MARKED WITH THE WORDS "RECLAIMED WATER"

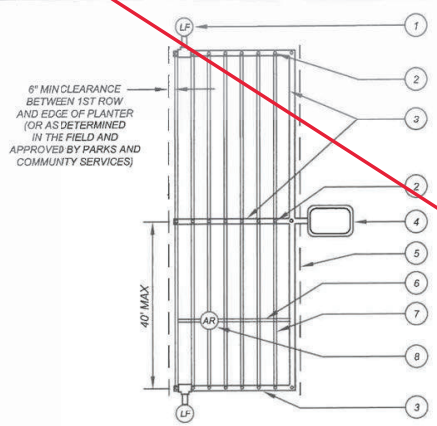

1. AUTOMATIC FLUSH VALVE (REFER TO STANDARD MVLI-574J)
2. DRIPPERLINE TO PVC CONNECTION (REFER TO STANDARD MVLI-574F) OR MANUFACTURER'S PRE-MADE DRIPLINE HEADER
3. LATERAL LINE (BURIED 12" MIN)
4. REMOTE CONTROL VALVE WITH FILTER AND PRESSURE REGULATING VALVE (REFER TO PLANS)
5. AREA PERIMETER
6. SOLID TUBING WITHOUT EMITTERS
7. DRIPPERLINE TUBING LATERAL - BURIED 2" (SPACING AS SPECIFIED ON PLANS)
8. AIR/VACUUM RELIEF VALVE (REFER TO STANDARD MVLI-574L)

NOTES:

1.) SOIL STAPLE DRIPPERLINE TUBING AT 3' OC WITH NETAFIM TLS6
2.) REFER TO STANDARD MVLI-574F FOR DRIPPERLINE AND BELOW GROUND PVC CONNECTION
3.) REFER TO STANDARD MVLI-574J FOR AUTOMATIC FLUSH VALVE
4.) REFER TO STANDARD MVLI-574L FOR AIR/VACUUM RELIEF VALVE

NOT TO SCALE

CITY OF MORENO VALLEY
PARKS AND COMMUNITY SERVICES DEPARTMENT

RECOMMENDED: DIVISION MANAGER DATE 6/20/19
APPROVED: PUBLIC WORKS DIRECTOR / CITY ENGINEER DATE 7/30/19

DRIPPERLINE (RECYCLED WATER SYSTEMS) CENTER FEED LAYOUT

STANDARD PLAN **MVLI-574D-0**
SHEET 4 OF 12

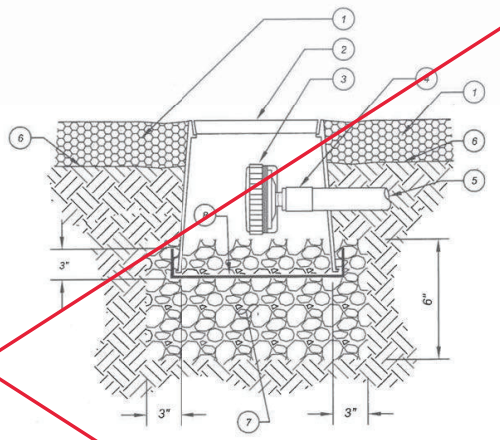

1. FINISH SURFACE OF MULCH (3" THICK)
2. 10" ROUND VALVE BOX WITH BOLT AND WASHER. SEE NOTE BELOW
3. AUTOMATIC FLUSH VALVE
4. 1/2" PVC COUP (FIPT x FIPT) WITH 1/2" MPT ADAPTER
5. DRIPPERLINE MANIFOLD CONNECTION
6. FINISH GRADE OF SOIL SURFACE, 3" - 4" COVER OVER PIPE
7. 3/4" GRAVEL SUMP
8. 1/4" STAINLESS STEEL WIRE MESH, TYPE 316

NOTE:

TOP OF VALVE BOX TO BE INSTALLED 3" ABOVE FINISH GRADE IN PLANTER AREAS, AND EVEN WITH FINISH SURFACE OF MULCH.

NOT TO SCALE

CITY OF MORENO VALLEY
PARKS AND COMMUNITY SERVICES DEPARTMENT

RECOMMENDED: DIVISION MANAGER DATE 6/20/19
APPROVED: PUBLIC WORKS DIRECTOR / CITY ENGINEER DATE 7/30/19

AUTOMATIC FLUSH VALVE (FOR DRIPPERLINE)

STANDARD PLAN **MVLI-574J-0**
SHEET 10 OF 12

DELETE SHEET

IRRIGATION DETAILS

CITY OF MORENO VALLEY STANDARD PLANS

ID-3

STATE OF CALIFORNIA - DEPARTMENT OF TRANSPORTATION

Caltrans

CONSULTANT SENIOR LANDSCAPE ARCHITECT: CHARLES SEAMONS LAMB

CALCULATED-DESIGNED BY: SAMUEL MEJIA

CHECKED BY: KEN LUDINGTON

REVISED BY

DATE REVISED

LAST REVISION 12-03-19

DATE PLOTTED => 17-AUG-2020
TIME PLOTTED => 16:20

BORDER LAST REVISED 7/2/2010

USERNAME => kj
DGN FILE => 0812000059sq003.dgn

RELATIVE BORDER SCALE IS IN INCHES 0 1 2 3

UNIT 2232

CU 08224

EA 323031

Dist	COUNTY	ROUTE	POST MILES TOTAL PROJECT	SHEET No.	TOTAL SHEETS
08	Riv	60	18.8/19.6	227	358

LICENSED LANDSCAPE ARCHITECT

PLANS APPROVAL DATE

THE STATE OF CALIFORNIA OR ITS OFFICERS OR AGENTS SHALL NOT BE RESPONSIBLE FOR THE ACCURACY OR COMPLETENESS OF SCANNED COPIES OF THIS PLAN SHEET.

LICENSED LANDSCAPE ARCHITECT — ERIC FREEMAN — Signature — Exp. 8/31/20 — 5-1-20 DATE — STATE OF CALIFORNIA

EMERALD DESIGN
393 N. HARBOR BLVD. SUITE 222
FULLERTON, CA 92832

CITY OF MORENO VALLEY
14177 FREDERICK STREET
MORENO VALLEY, CALIFORNIA 92552

NOTES:

1. VALVE BOX COVERS MUST BE PURPLE IN COLOR (PANATONE 522-C) AND MARKED WITH THE WORDS "RECLAIMED WATER"

2. WARNING LABELS-THREE INCH BY FOUR INCHES (3"X4") TAG-TYPE WARNING LABELS SHALL BE ATTACHED TO ALL VALVES USING HEAVY DUTY NYLON FASTENERS.

3. LABELS SHALL BE TEN (10) MIL THICK, MADE FROM AN INERT PLASTIC FILM, PURPLE IN COLOR (PANATONE 512-C) IMPRINTED WITH THE WORDS "CAUTION: RECLAIMED WATER-DO NOT DRINK" AND THE INTERNATIONAL SYMBOL FOR "DO NOT DRINK" IN BLACK INK.

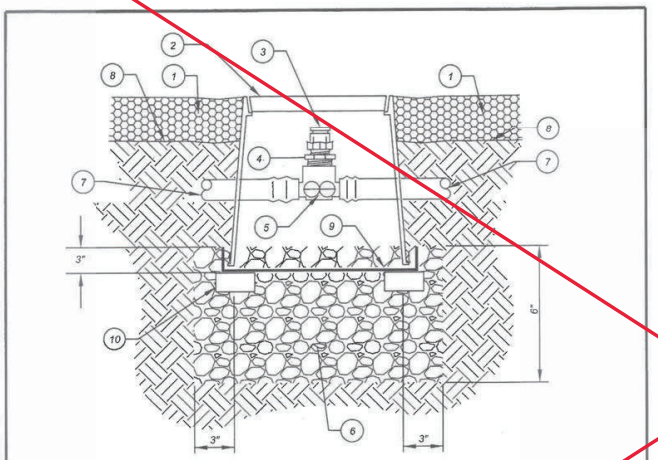

1. FINISH SURFACE OF MULCH (3" THICK)
2. 6" ROUND VALVE BOX WITH BOLT AND WASHER. SEE NOTE BELOW
3. AIR / VACUUM RELIEF VALVE
4. 3/4" M x 1/2" F REDUCTION BUSHING
5. DRIPPERLINE COMBINATION TEE (INS x INS x 3/4" FPT)
6. 3/4" GRAVEL SUMP
7. DRIPPERLINE TUBING: FROM SURFACE INTO BOX TYPICAL
8. SOIL SURFACE FINISH GRADE, 3"-4" COVER OVER PIPE
9. 1/4" STAINLESS STEEL WIRE MESH, TYPE 316
10. CONCRETE PAVER SUPPORT (3 PER BOX)

NOTE:

TOPOF VALVE BOX TO BE INSTALLED 3" ABOVE FINISH GRADE IN PLANTER AREAS, AND EVEN WITH FINISH SURFACE OF MULCH.

NOT TO SCALE

RECOMMENDED: DIVISION MANAGER — DATE 6/20/19
APPROVED: PUBLIC WORKS DIRECTOR/ CITY ENGINEER — DATE 7/30/19

CITY OF MORENO VALLEY
PARKS AND COMMUNITY SERVICES DEPARTMENT

AIR / VACUUM RELIEF VALVE (FOR DRIPPERLINE)

STANDARD PLAN MVLI-574L-1

SHEET 12 OF 12

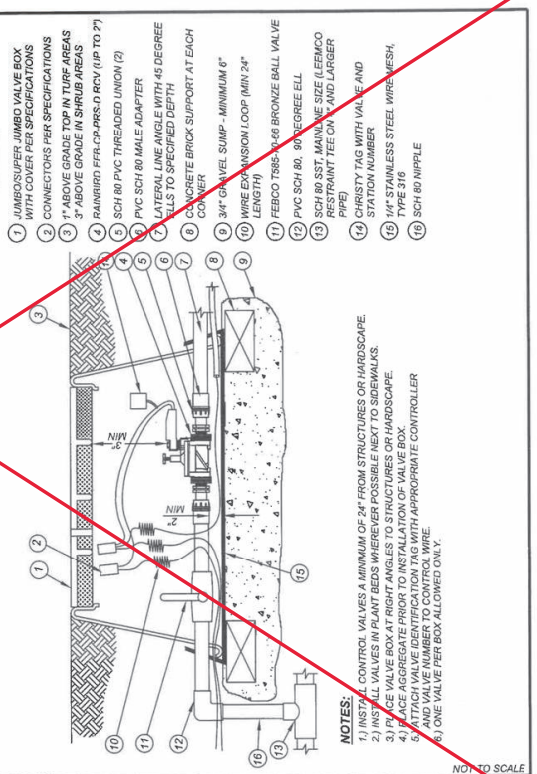

NOT TO SCALE

RECOMMENDED: DIVISION MANAGER — DATE 6/20/19
APPROVED: PUBLIC WORKS DIRECTOR/ CITY ENGINEER — DATE 7/30/19

CITY OF MORENO VALLEY
PARKS AND COMMUNITY SERVICES DEPARTMENT

REMOTE CONTROL VALVE DETAIL

STANDARD PLAN MVLI-552B-0

SHEET 2 OF 2

DELETE SHEET

IRRIGATION DETAILS

CITY OF MORENO VALLEY STANDARD PLANS

ID-4

STATE OF CALIFORNIA - DEPARTMENT OF TRANSPORTATION — Caltrans

CONSULTANT SENIOR LANDSCAPE ARCHITECT: CHARLES SEAMONS LAMB

CALCULATED-DESIGNED BY: SAMUEL MEJIA — CHECKED BY: KEN LUDINGTON

REVISED BY — DATE REVISED

LAST REVISION — DATE PLOTTED => 17-AUG-2020 — TIME PLOTTED => 16:22

12-03-19

BORDER LAST REVISED 7/2/2010

USERNAME => kj
DGN FILE => 0812000059sq004.dgn

RELATIVE BORDER SCALE IS IN INCHES 0 1 2 3

UNIT 2232 | CU 08224 | EA 323031

Dist	COUNTY	ROUTE	POST MILES TOTAL PROJECT	SHEET No.	TOTAL SHEETS
08	Riv	60	18.8/19.6	228	358

LICENSED LANDSCAPE ARCHITECT

PLANS APPROVAL DATE

THE STATE OF CALIFORNIA OR ITS OFFICERS OR AGENTS SHALL NOT BE RESPONSIBLE FOR THE ACCURACY OR COMPLETENESS OF SCANNED COPIES OF THIS PLAN SHEET.

LICENSED LANDSCAPE ARCHITECT — ERIC FREEMAN #6525 — Signature — Exp. 8/31/20 — 5-1-20 DATE — STATE OF CALIFORNIA

EMERALD DESIGN
305 N. HARBOR BLVD. SUITE 222
FULLERTON, CA 92832

CITY OF MORENO VALLEY
14177 FREDERICK STREET
MORENO VALLEY, CALIFORNIA 92552

REVISED BY	DATE REVISED
SAMUEL MEJIA	
KEN LUDINGTON	

CALCULATED-DESIGNED BY

CHECKED BY

CONSULTANT SENIOR LANDSCAPE ARCHITECT

CHARLES SEAMONS LAMB

STATE OF CALIFORNIA - DEPARTMENT OF TRANSPORTATION

Caltrans

NOTES:

1. VALVE BOX COVERS MUST BE PURPLE IN COLOR (PANATONE 522-C) AND MARKED WITH THE WORDS "RECLAIMED WATER"

2. WARNING LABELS-THREE INCH BY FOUR INCHES (3"X4") TAG-TYPE WARNING LABELS SHALL BE ATTACHED TO ALL VALVES USING HEAVY DUTY NYLON FASTENERS.

3. LABELS SHALL BE TEN (10) MIL THICK, MADE FROM AN INERT PLASTIC FILM, PURPLE IN COLOR (PANATONE 512-C) IMPRINTED WITH THE WORDS "CAUTION: RECLAIMED WATER-DO NOT DRINK" AND THE INTERNATIONAL SYMBOL FOR "DO NOT DRINK" IN BLACK INK.

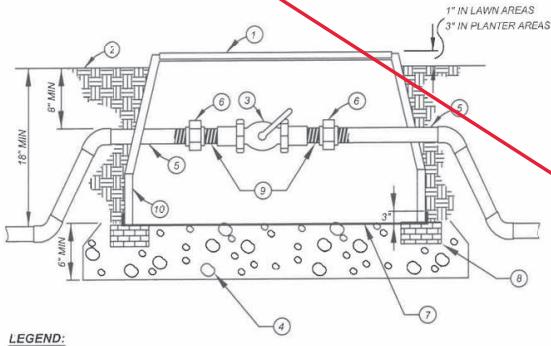

LEGEND:

1. JUMBO RECTANGULAR PLASTIC VALVE BOX WITH LOCKING LID (PER PLAN AS SPECIFIED), COVER SHALL BE MARKED "BV" OR "GV" VIA BRANDING (2")
2. FINISH GRADE
3. BALL VALVE (PER SPECIFICATIONS)
4. 3/4" WASHED CRUSHED AGGREGATE BASE
5. SCH 80 PVC TOE NIPPLE ASSEMBLY (REFER TO STANDARD MVLI-544B-0)
6. SCH 80 PVC UNION, FIPT x FIPT
7. 1/4" STAINLESS STEEL WIRE MESH, TYPE 316
8. CONCRETE BLOCK, TYPICAL OF 4
9. SCH 80 CLOSE NIPPLE
10. VALVE BOX EXTENSION (AS NECESSARY)

NOTES:

1) PLACE AGGREGATE PRIOR TO INSTALLATION OF VALVE BOX.
2) A JUMBO RECTANGULAR BOX SHALL BE INSTALLED. BALL VALVES UNDER 2" TO HAVE HANDLE LOCATED VERTICALLY. BALL VALVES LARGER THAN 2" TO HAVE A 2" SQUARE NUT AND DELETE HANDLE.
3) CAST IRON AND / OR FLANGED VALVES WILL REQUIRE A POURED-IN-PLACE CONCRETE SUPPORT (NOT SHOWN).

NOT TO SCALE

RECOMMENDED: DIVISION MANAGER / DATE 9/14/19
APPROVED: PUBLIC WORKS DIRECTOR/ CITY ENGINEER / DATE 10/4/19

CITY OF MORENO VALLEY
PARKS AND COMMUNITY SERVICES DEPARTMENT

BALL VALVE / GATE VALVE 3" OR SMALLER

STANDARD PLAN **MVLI-551B-0**

SHEET 2 OF 2

LEGEND:

1. SUPER JUMBO VALVE BOX WITH COVER PER SPECIFICATIONS
2. CONNECTORS PER SPECIFICATIONS.
3. 1" ABOVE GRADE TOP IN TURF AREAS 3" ABOVE GRADE IN SHRUB AREAS
4. RCV PER SPECIFICATIONS
5. SCH 80 PVC THREADED UNION (2)
6. PVC SCH 80 NIPPLE
7. LATERAL LINE-ANGLE WITH 45 DEGREE ELLS TO SPECIFIED DEPTH
8. CONCRETE BRICK SUPPORT AT EACH CORNER
9. 3/4" GRAVEL SUMP - MINIMUM 6"
10. WIRE EXPANSION LOOP (MIN 24" LENGTH)
11. FEBCO 1365-70-66 BRONZE BALL VALVE
12. PVC SCH 80 90 DEGREE ELL
13. SCH 80 STT. MAINLINE SIZE (LEEMCO RESTRAINT TEE ON 4" AND LARGER PIPE)
14. CHRISTY TAG WITH VALVE AND STATION NUMBER
15. 1/4" STAINLESS STEEL MESH SCREEN, TYPE 316
16. SCH 80 NIPPLE
17. PRESSURE REGULATOR PER SPECIFICATIONS
18. FILTER PER SPECIFICATIONS

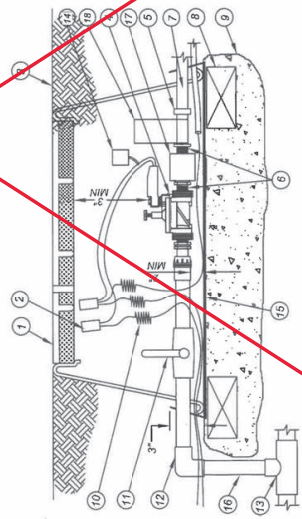

NOTES:

1.) INSTALL CONTROL VALVES A MINIMUM OF 24" FROM STRUCTURES OR HARDSCAPE.
2.) INSTALL VALVES IN PLANT BEDS WHEREVER POSSIBLE NEXT TO SIDEWALKS.
3.) PLACE VALVE BOX AT RIGHT ANGLES TO STRUCTURES OR HARDSCAPE.
4.) PLACE AGGREGATE PRIOR TO INSTALLATION OF VALVE BOX.
5.) ATTACH IDENTIFICATION TAG WITH APPROPRIATE CONTROLLER AND VALVE NUMBER TO CONTROL WIRE.
6.) ONE VALVE PER BOX ALLOWED ONLY.

NOT TO SCALE

RECOMMENDED: DIVISION MANAGER / DATE 6/20/19
APPROVED: PUBLIC WORKS DIRECTOR/ CITY ENGINEER / DATE 7/30/19

CITY OF MORENO VALLEY
PARKS AND COMMUNITY SERVICES DEPARTMENT

REMOTE CONTROL VALVE DETAIL FOR DRIP SYSTEMS

STANDARD PLAN **MVLI-553B-0**

SHEET 2 OF 2

DELETE SHEET

IRRIGATION DETAILS

CITY OF MORENO VALLEY STANDARD PLANS

ID-5

LAST REVISION 12-03-19 | DATE PLOTTED => 17-AUG-2020 | TIME PLOTTED => 16:30

BORDER LAST REVISED 7/2/2010 | USERNAME => kj | DGN FILE => 0812000059sq005.dgn | RELATIVE BORDER SCALE IS IN INCHES 0 1 2 3 | UNIT 2232 | CU 08224 | EA 323031

NOTES:

1. SEE CALTRANS STANDARD PLANS FOR DETAILS NOT SHOWN

IRRIGATION QUANTITY (LATERAL SUPPLY SIDE OF CONTROL VALVE)

CONTROLLER LETTER	VALVE NUMBER	PLASTIC PIPE (SCHEDULE 40) (SUPPLY LINE) 1" LF	1-¼" LF	1-½" LF	CHECK VALVE EA	PVC PIPE CONDUIT SLEEVE (SCH 80) 3.5" LF	SPRINKLER ASSEMBLY TREE WELL EA	POP UP EA	RISER EA
A	1	252	68						35
	2	140		26					46
	3	140		26					45
	4	350		20					46
	5	82				15	4		
	6	319	65	15		17			53
	7	403	8	174					54
	8	560					18		
	9	281	127						48
	10	136					8		
	11	451		61					52
	12	280	14	13					53
	13	123	91						48
	14	123	91						48
	15	123	91						48
	16	375	53						50
	17	122					4		
	18	102					6		
	19	328							5
	20	140	37	55					53
	21	140	37	55					54
	22	250	122	19					50
	23	315					18		
	24	450	122	96					50
	25	417		15				40	
	26	305	86	61					47
	27	325	50	101					46
	28	332		67				30	
	29	489					16		
	30	124	31						37
	31	124	31						42
	32	273	128	15					46
	33	243	78	31					43
	34	106				22	6		
	35	485	29	17		22			43
	36	317	26	143	1	70			45
	37	139	153		1	70			40
	38	139	153		1	70			41
	39	275	14	16					54
	40	295					24		
	41	294	213		1	25			40
	42	438	39	50		25			45
	43	342	155		1	25			41
	44	109	25	51					47
	45	109	25	51					48
SUBTOTAL A		11,665	2,329	1,295	5	361	104	70	1,589

DELETE TABLE

DELETE TABLE

Include Sleeves

CONTROLLER LETTER	VALVE NUMBER	PLASTIC PIPE (SCHEDULE 40) (SUPPLY LINE) 1" LF	1-¼" LF	1-½" LF	PVC PIPE CONDUIT SLEEVE (SCH 80) 3.5" LF	CHECK VALVE EA	SPRINKLER ASSEMBLY TREE WELL EA	POP UP EA	RISER EA
B	1	354	97	72					47
	2	422			28		18		
	3	385	40	65	22				45
	4	452	35	81	15				46
	5	313	71	21					49
	6	342	50	171					49
	7	513	55						26
	8	68	174						40
	9	68	174						40
	10	68	174						40
	11	68	174						40
	12	916	21				28		
	13	327	222	354				18	
	14	200	313						30
	15	174	377						30
	16	390					10		
	17	46		00					49
	18	29							33
	19	14		34					52
	20	142		134					52
	21	248	110	101					47
	22	356	19						42
	23	144	18						49
	24	144	18						49
	25	144	18						49
	26	144	18						49
	27	309	29						42
	28	235					14		
	29		175						40
	30	181	39	78					50
	31	134					6		
	32	264	39	18					50
	33	121	23						42
	34	121	23						43
	35	343	60	173				37	
	36	372		20					18
	37	255	203						45
	38	190					10		
	39	272	96			1			41
	40	429		98	37	1			51
	41	107	81		37				35
	42	107	81		37	1			36
SUBTOTAL B		10720	3,055	1,620	178	4	86	85	1,476
SUBTOTAL A		11,665	2,329	1,295	361	5	104	70	1,589
TOTAL		22,385	5,384	2,915	539	9	190	155	3,065

DELETE TABLE

DELETE TABLE

Include Sleeves

Dist	COUNTY	ROUTE	POST MILES TOTAL PROJECT	SHEET NO.	TOTAL SHEETS
08	Riv	60	18.8/19.6	229	358

LICENSED LANDSCAPE ARCHITECT

PLANS APPROVAL DATE

THE STATE OF CALIFORNIA OR ITS OFFICERS OR AGENTS SHALL NOT BE RESPONSIBLE FOR THE ACCURACY OR COMPLETENESS OF SCANNED COPIES OF THIS PLAN SHEET.

LICENSED LANDSCAPE ARCHITECT ERIC FREEMAN 6626 — EXP 8/31/20 — 5-1-20 — STATE OF CALIFORNIA

EMERALD DESIGN
305 N. HARBOR BLVD. SUITE 222
FULLERTON, CA 92832

CITY OF MORENO VALLEY
14177 FREDERICK STREET
MORENO VALLEY, CALIFORNIA 92552

REVISED BY	DATE REVISED
SAMUEL MEJIA	
KEN LUDINGTON	

CALCULATED-DESIGNED BY

CHECKED BY

CONSULTANT SENIOR LANDSCAPE ARCHITECT

CHARLES SEAMONS LAMB

STATE OF CALIFORNIA - DEPARTMENT OF TRANSPORTATION

Caltrans

LAST REVISION 12-03-19

DATE PLOTTED => 17-AUG-2020

TIME PLOTTED => 16:31

IRRIGATION QUANTITIES

IQ-1

BORDER LAST REVISED 7/2/2010

USERNAME => kj
DGN FILE => 0812000059sr001.dgn

RELATIVE BORDER SCALE IS IN INCHES 0 1 2 3

UNIT 2232

CU 08224

EA 323031

Dist	COUNTY	ROUTE	POST MILES TOTAL PROJECT	SHEET No.	TOTAL SHEETS
08	Riv	60	18.8/19.6	230	358

LICENSED LANDSCAPE ARCHITECT

PLANS APPROVAL DATE

THE STATE OF CALIFORNIA OR ITS OFFICERS OR AGENTS SHALL NOT BE RESPONSIBLE FOR THE ACCURACY OR COMPLETENESS OF SCANNED COPIES OF THIS PLAN SHEET.

LICENSED LANDSCAPE ARCHITECT ERIC FREEMAN #6245 SIGNATURE EXP. 12/31/22 5-1-20 DATE STATE OF CALIFORNIA

EMERALD DESIGN
305 N. HARBOR BLVD. SUITE 222
FULLERTON, CA 92832

CITY OF MORENO VALLEY
14177 FREDERICK STREET
MORENO VALLEY, CALIFORNIA 92552

NOTES:

1. ALL IRRIGATION EQUIPMENT WITHIN MORENO VALLEY RIGHT OF WAY TO CONFORM TO CITY STANDARDS.

2. ALL IRRIGATION EQUIPMENT TO BE PURPLE IDENTIFYING RECLAIMED WATER.

IRRIGATION QUANTITY (MAIN SUPPLY SIDE OF CONTROL VALVE)

SHEET No.	IRRIGATION CONTROLLER: ENCLOSURE CABINET	IRRIGATION CONTROLLER: 48 STATION (WALL MOUNTED)	BACKFLOW PREVENTER ASSEMBLY 2"	BACKFLOW PREVENTER ENCLOSURE	SENSOR 1"	VALVE: REMOTE CONTROL 1"	VALVE: REMOTE CONTROL 1.5"	VALVE: REMOTE CONTROL 2"	VALVE: BALL 2"	VALVE: GATE 3"	(SUPPLY LINE): PLASTIC PIPE (CLASS 315) 3"	CHDPE 12"	LOCATE BACKFLOW PREVENTER ASSEMBLY	CONTROL AND NEUTRAL CONDUCTORS (MOR-CLAD)
	EA	EA	EA	EA	EA	EA	EA	EA	EA	EA	LF	LF	EA	EA
IP-1	-	-	-	-	-	-	-	-	-	-	-	0	-	-
IP-2	1	1	1	1	1	8	37	1	11	8	2,100	303	1	1
IP-3	1	1	-	-	-	5	37	-	9	8	2,374	285	-	-
IP-4	-	-	-	-	-	-	4	-	1	-	-	-	-	-
IP-5	-	-	-	-	-	2	-	-	1	-	50	-	-	-
TOTAL	2	2	1	1	1	15	78	1	22	16	4,524	588	1	1

DELETE TABLE

DELETE TABLE

Include Sleeves

IRRIGATION QUANTITY (MAIN SUPPLY SIDE OF CONTROL VALVE) CITY R/W

SHEET NO.	IRRIGATION CONTROLLER	REMOTE CONTROL VALVE	REMOTE CONTROL VALVE FOR DRIP SYSTEMS	BALL VALVE
	EA	EA		EA
IP-5	G (EXISTING)	1	1	1
TOTAL		1	1	1

DELETE TABLE

IRRIGATION QUANTITY (LATERAL SUPPLY SIDE OF CONTROL VALVE) CITY R/W

CONTROLLER LETTER	VALVE NUMBER	PLASTIC PIPE (SCHEDULE 40) (SUPPLY LINE) (PURPLE) 3/4"	DRIPPERLINE	AUTOMATIC FLUSH VALVE (DRIPPERLINE)	AIR/VACUME RELIEF VALVE	DEEP WELL TREE IRRIGATION
		LF	LF	EA	EA	EA
EXISTING	E1	150	1644	2	1	
	E2	150				2
TOTAL		300	1644	2	1	2

DELETE TABLE

IRRIGATION QUANTITIES
IQ-2

STATE OF CALIFORNIA - DEPARTMENT OF TRANSPORTATION

Caltrans

CONSULTANT SENIOR LANDSCAPE ARCHITECT: CHARLES SEAMONS LAMB

CALCULATED-DESIGNED BY: SAMUEL MEJIA

CHECKED BY: KEN LUDINGTON

REVISED BY

DATE REVISED

LAST REVISION 12-03-19

DATE PLOTTED => 17-AUG-2020
TIME PLOTTED => 16:32

Dist	COUNTY	ROUTE	POST MILES TOTAL PROJECT	SHEET NO.	TOTAL SHEETS
08	Riv	60	18.8/19.6	231	358

LICENSED LANDSCAPE ARCHITECT

PLANS APPROVAL DATE

THE STATE OF CALIFORNIA OR ITS OFFICERS OR AGENTS SHALL NOT BE RESPONSIBLE FOR THE ACCURACY OR COMPLETENESS OF SCANNED COPIES OF THIS PLAN SHEET.

LICENSED LANDSCAPE ARCHITECT — ERIC FREEMAN FREEMAN — SIGNATURE — EXP 8/31/20 — 5-1-20 DATE — STATE OF CALIFORNIA

EMERALD DESIGN
305 N. HARBOR BLVD. SUITE 222
FULLERTON, CA 92832

CITY OF MORENO VALLEY
14177 FREDERICK STREET
MORENO VALLEY, CALIFORNIA 92552

LEGEND:

SYMBOL	DESCRIPTION	SOURCE	MODEL NO.
⊠	WATER METER	EMWD	--
	CONTROL VALVE:	RAIN BIRD	PEB
FS	BRASS FLOW SENSOR	CALSENSE	FM-1B
	REDUCED PRESSURE BACKFLOW PREVENTER WITH LOCKABLE ENCLOSURE	FEBCO	825 YA WITH SBBC-45
	IRRIGATION CONTROLLER W/ WEATHERPROOF ENCLOSURE, PEDESTAL AND YAGI ANTENNA (ICC-B TO BE THE PARENT CONTROLLER)	CALSENSE	CS3000
	CLASS 315 PVC MAINLINE	--	--
	SCH 40 PVC LATERAL PIPING	--	--
	CONTROL AND NEUTRAL CONDUCTOR	--	--
④	SHRUB BUBBLER	--	--
⑤	POP UP SPRINKLER'S	--	--
5	POP UP SPRINKLER'S	--	--
o	TREE BUBBLER	--	--
△	IN LINE CHECK VALVE SIZE TO PIPE	--	--
	BALL VALVE	--	--
	GATE VALVE	--	--
⊗	YAGI ANTENNA	--	--

VALVE CALLOUT LEGEND

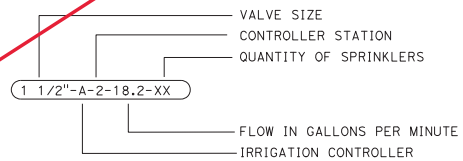

AVAILABLE WATER CALCULATIONS

PRESSURE ZONE HWL/NEAREST TANK: 1967-K-OLIVER
HEIGHT OR NEAREST TANK IN PZ (ft): 33
DATE TEST: 10/14/2019
APN or TRACT: NEAR APN 488-390-024, WS 2019-1151
STATIC PRESSURE AVAILABLE= 66-70 PSI @ POC
CONTACT: EASTERN MUNICIPAL WATER DISTRICT (EMWD): (951) 928-3777
MAXIMUM SYSTEM FLOW @ STATION B-13= 34.00

WORST CASE PRESSURE CALCULATIONS POC
26.00 GPM @ STATION B-20

2" WATER METER	0.70
2" BACKFLOW PREVENTER	12.00
375' OF 3" MAINLINE	.34
1-1/2" CONTROL VALVE	4.00
2" MASTER VALVE	4.80
150' OF LATERAL LINE	3.75
ELEVATION - 9'	3.90
TOTAL PSI LOSS	29.49
25% FITTING	7.37
PSI REQUIRED @ HEAD	30.00
TOTAL PSI REQUIRED @ POC:	62.86

NOTE:
WATER BUDGET IS CALCULATED FOR NEW PLANT INSTALLATIONS WHERE NEW IRRIGATION EQUIPMENT IS TO BE INSTALLED.

SECTION A: WATER BUDGET CALCULATION

SECTION A1: MAXIMUM WATER ALLOWANCE (MAWA)

MAWA = (ETo-Epp†)(0.62)[(ETAF*LA)+(0.3*SLA)]
= ((56.4-(6.45*.25)(0.62))[(0.45*245,291)+((0.3*235,428)]
= (55.40)[(218,271.60)]
= 12,092,247 GALLONS PER YEAR

Epp† - EFFECTIVE PRECIPITATION (25% ANNUAL PRECIPITATION)
ETo - REFERENCE EVAPOTRANSPIRATION
ETAF - ET ADJUSTMENT FACTOR (0.7)
LA - TOTAL LANDSCAPE AREA
SLA - SPECIAL LANDSCAPE AREA (NOT APPLICABLE)
0.62 - CONVERSION FACTOR (GAL/SQFT)
0.3 - ADDITIONAL ET ADJUSTMENT FACTOR FOR SLA (NOT APPLICABLE)

SECTION A2: ESTIMATED TOTAL WATER USE (ETWU)

ETWU = (ETo)(0.62)[((PF*HA)/IE) + SLA]
= (56.4)(0.62)[((0.3*245,291)/.81) + 235,428]
= (34.97)[(90,848.52) + 235,428]
= (34.97)(326,276.52)
= 11,409,889 GALLONS

ETo - REFERENCE EVAPOTRANSPIRATION
PF - PLANT FACTOR (WUCOLS III)
HA - HYDROZONE AREA (SQFT)
IE - IRRIGATION EFFICIENCY (Min 0.71)
SLA - SPECIAL LANDSCAPE AREA (SQFT) - NOT APPLICABLE
0.62 - CONVERSION FACTOR (GAL/SQFT)

DELETE SHEET

IRRIGATION LEGEND & WATER DEMAND CALCULATIONS

IQ-3

STATE OF CALIFORNIA - DEPARTMENT OF TRANSPORTATION
CONSULTANT SENIOR LANDSCAPE ARCHITECT
CHARLES SEAMONS LAMB
CALCULATED-DESIGNED BY
CHECKED BY
SAMUEL MEJIA
KEN LUDINGTON
REVISED BY
DATE REVISED

LAST REVISION 12-03-19
DATE PLOTTED => 17-AUG-2020
TIME PLOTTED => 16:34

BORDER LAST REVISED 7/2/2010
USERNAME => kj
DGN FILE => 0812000059sr003.dgn
RELATIVE BORDER SCALE IS IN INCHES 0 1 2 3
UNIT 2232
CU 08224
EA 323031

NOTES:

① CITY OF MORENO VALLEY
SEE STANDARD DETAIL ON SHEET ID-4

② CITY OF MORENO VALLEY
SEE STANDARD DETAIL ON SHEET ID-5

SYMBOL	DESCRIPTION	SOURCE	MODEL NO.
	SCRUBBER CONTROL VALVE (PURPLE)	①	--
	SCRUBBER DRIP CONTROL VALVE KIT WITH FILTER (PURPLE)	②	--
	BALL VALVE	②	--
---------	EXISTING 3" MAINLINE	EXISTING	EXISTING
———	¾ SCH 40 PVC SUPPLY LINE (LATERAL LINE)	--	--
·—·—·—·	DRIP LINE	NETAFIM	TLRWP6-18
	AUTOMATIC FLUSH VALVE	NETAFIM	TL050MFV-1
	AIR RELIEF VALVE	NETAFIM	TLAVRV
	TREE WELL 36" DEEP ROOT WATERING SYSTEM WITH .5 GPM BUBBLER	RAINBIRD	RWSBC1402

DELETE SHEET

IRRIGATION LEGEND (WITHIN CITY RIGHT OF WAY)

IQ-4

Dist	COUNTY	ROUTE	POST MILES TOTAL PROJECT	SHEET NO.	TOTAL SHEETS
08	Riv	60	18.8/19.6	232	358

LICENSED LANDSCAPE ARCHITECT

PLANS APPROVAL DATE

THE STATE OF CALIFORNIA OR ITS OFFICERS OR AGENTS SHALL NOT BE RESPONSIBLE FOR THE ACCURACY OR COMPLETENESS OF SCANNED COPIES OF THIS PLAN SHEET.

LICENSED LANDSCAPE ARCHITECT — 2496 — FREEMAN FRED — Exp 8/31/20 — 5-1-20 — STATE OF CALIFORNIA

EMERALD DESIGN
305 N. HARBOR BLVD. SUITE 222
FULLERTON, CA 92832

CITY OF MORENO VALLEY
14177 FREDERICK STREET
MORENO VALLEY, CALIFORNIA 92552

REVISED BY	DATE REVISED
SAMUEL MEJIA	KEN LUDINGTON

CALCULATED-DESIGNED BY | CHECKED BY

CONSULTANT SENIOR LANDSCAPE ARCHITECT
CHARLES SEAMONS LAMB

STATE OF CALIFORNIA - DEPARTMENT OF TRANSPORTATION
Caltrans

LAST REVISION 12-03-19
DATE PLOTTED => 17-AUG-2020
TIME PLOTTED => 16:36

BORDER LAST REVISED 7/2/2010 | USERNAME => kj | DGN FILE => 0812000059sr004.dgn | RELATIVE BORDER SCALE IS IN INCHES 0 1 2 3 | UNIT 2232 | CU 08224 | EA 323031

Dist	COUNTY	ROUTE	POST MILES TOTAL PROJECT	SHEET NO.	TOTAL SHEETS
08	Riv	60	18.8/19.6	233	358

LICENSED LANDSCAPE ARCHITECT

PLANS APPROVAL DATE

THE STATE OF CALIFORNIA OR ITS OFFICERS OR AGENTS SHALL NOT BE RESPONSIBLE FOR THE ACCURACY OR COMPLETENESS OF SCANNED COPIES OF THIS PLAN SHEET.

LICENSED LANDSCAPE ARCHITECT — ERIC S. FREEMAN FREEMAN — SIGNATURE — EXP. 8/31/20 — 5-1-20 DATE — STATE OF CALIFORNIA

EMERALD DESIGN
305 N. HARBOR BLVD. SUITE 222
FULLERTON, CA 92832

CITY OF MORENO VALLEY
14177 FREDERICK STREET
MORENO VALLEY, CALIFORNIA 92552

IRRIGATION CONTROLLER CHART

METER CONTROLLER	STATION	PLANT MATERIAL	CROP COEFFICIENT TYPE	SPRINKLER TYPE	ZONE FLOW RATE	RUN TIME FOR IRRIGATION DAY (MINUTES) JAN	FEB	MAR	APR	MAY	JUN	JUL	AUG	SEP	OCT	NOV	DEC	STATION	PROGRAM A	B	C
A	1	SHRUB/GROUNDCOVER	L		18.00	6	6	6	8	8	9	10	10	9	9	8	6	1	X		
A	2	SHRUB/GROUNDCOVER	L	BUBBLER	23.00	6	6	6	8	8	9	10	10	9	9	8	6	2	X		
A	3	SHRUB/GROUNDCOVER	L	BUBBLER	22.50	6	6	6	8	8	9	10	10	9	9	8	6	3	X		
A	4	SHRUB/GROUNDCOVER	L	BUBBLER	23.00	6	6	6	8	8	9	10	10	9	9	8	6	4	X		
A	5	TREE	L	BUBBLER	2.00	6	6	6	8	8	9	10	10	9	9	8	6	5		X	
A	6	SHRUB/GROUNDCOVER	L	BUBBLER	26.50	6	6	6	8	8	9	10	10	9	9	8	6	6	X		
A	7	SHRUB/GROUNDCOVER	L	BUBBLER	27.00	6	6	6	8	8	9	10	10	9	9	8	6	7	X		
A	8	TREE	L	BUBBLER	9.00	6	6	6	8	8	9	10	10	9	9	8	6	8		X	
A	9	SHRUB/GROUNDCOVER	L	BUBBLER	24.00	6	6	6	8	8	9	10	10	9	9	8	6	9	X		
A	10	TREE	L	BUBBLER	4.00	6	6	6	8	8	9	10	10	9	9	8	6	10		X	
A	11	SHRUB/GROUNDCOVER	L	BUBBLER	26.00	6	6	6	8	8	9	10	10	9	9	8	6	11	X		
A	12	SHRUB/GROUNDCOVER	L	BUBBLER	26.50	6	6	6	8	8	9	10	10	9	9	8	6	12	X		
A	13	SHRUB/GROUNDCOVER	L	BUBBLER	27.00	6	6	6	8	8	9	10	10	9	9	8	6	13	X		
A	14	SHRUB/GROUNDCOVER	L	BUBBLER	24.00	6	6	6	8	8	9	10	10	9	9	8	6	14	X		
A	15	SHRUB/GROUNDCOVER	L	BUBBLER	24.00	6	6	6	8	8	9	10	10	9	9	8	6	15	X		
A	16	SHRUB/GROUNDCOVER	L	BUBBLER	25.00	6	6	6	8	8	9	10	10	9	9	8	6	16	X		
A	17	TREE	L	BUBBLER	2.00	6	6	6	8	8	9	10	10	9	9	8	6	17		X	
A	18	TREE	L	BUBBLER	3.00	6	6	6	8	8	9	10	10	9	9	8	6	18		X	
A	19	SHRUB/GROUNDCOVER	L	BUBBLER	22.50	6	6	6	8	8	9	10	10	9	9	8	6	19	X		
A	20	SHRUB/GROUNDCOVER	L	BUBBLER	26.50	6	6	6	8	8	9	10	10	9	9	8	6	20	X		
A	21	SHRUB/GROUNDCOVER	L	BUBBLER	27.00	6	6	6	8	8	9	10	10	9	9	8	6	21	X		
A	22	SHRUB/GROUNDCOVER	L	BUBBLER	25.00	6	6	6	8	8	9	10	10	9	9	8	6	22	X		
A	23	TREE	L	BUBBLER	9.00	6	6	6	8	8	9	10	10	9	9	8	6	23		X	
A	24	SHRUB/GROUNDCOVER	L	BUBBLER	25.00	6	6	6	8	8	9	10	10	9	9	8	6	24			
A	25	HYDROSEED	L	SPRAY	28.08	10	10	10	13	13	15	20	20	15	15	10	10	25			X
A	26	SHRUB/GROUNDCOVER	L	BUBBLER	23.50	6	6	6	8	8	9	10	10	9	9	8	6	26	X		
A	27	SHRUB/GROUNDCOVER	L	BUBBLER	23.50	6	6	6	8	8	9	10	10	9	9	8	6	27	X		
A	28	HYDROSEED	L	SPRAY	20.68	10	10	10	13	13	15	20	20	15	15	10	10	28			X
A	29	TREE	L	BUBBLER	8.00	6	6	6	8	8	9	10	10	9	9	8	6	29		X	
A	30	SHRUB/GROUNDCOVER	L	BUBBLER	18.50	6	6	6	8	8	9	10	10	9	9	8	6	30	X		
A	31	SHRUB/GROUNDCOVER	L	BUBBLER	21.00	6	6	6	8	8	9	10	10	9	9	8	6	31	X		
A	32	SHRUB/GROUNDCOVER	L	BUBBLER	23.00	6	6	6	8	8	9	10	10	9	9	8	6	32	X		
A	33	SHRUB/GROUNDCOVER	L	BUBBLER	21.50	6	6	6	8	8	9	10	10	9	9	8	6	33	X		
A	34	TREE	L	BUBBLER	3.00	6	6	6	8	8	9	10	10	9	9	8	6	34		X	
A	35	SHRUB/GROUNDCOVER	L	BUBBLER	24.00	6	6	6	8	8	9	10	10	9	9	8	6	35	X		
A	36	SHRUB/GROUNDCOVER	L	BUBBLER	22.50	6	6	6	8	8	9	10	10	9	9	8	6	36	X		
A	37	SHRUB/GROUNDCOVER	L	BUBBLER	20.00	6	6	6	8	8	9	10	10	9	9	8	6	37	X		
A	38	SHRUB/GROUNDCOVER	L	BUBBLER	20.50	6	6	6	8	8	9	10	10	9	9	8	6	38	X		
A	39	SHRUB/GROUNDCOVER	L	BUBBLER	27.00	6	6	6	8	8	9	10	10	9	9	8	6	39	X		
A	40	TREE	L	BUBBLER	12.00	6	6	6	8	8	9	10	10	9	9	8	6	40		X	
A	41	SHRUB/GROUNDCOVER	L	BUBBLER	20.00	6	6	6	8	8	9	10	10	9	9	8	6	41	X		
A	42	SHRUB/GROUNDCOVER	L	BUBBLER	22.50	6	6	6	8	8	9	10	10	9	9	8	6	42	X		
A	43	SHRUB/GROUNDCOVER	L	BUBBLER	20.50	6	6	6	8	8	9	10	10	9	9	8	6	43	X		
A	44	SHRUB/GROUNDCOVER	L	BUBBLER	23.50	6	6	6	8	8	9	10	10	9	9	8	6	44	X		
A	45	SHRUB/GROUNDCOVER	L	BUBBLER	24.00	6	6	6	8	8	9	10	10	9	9	8	6	45	X		
TOTAL (MINUTES)						278	278	278	370	370	417	470	470	417	417	364	278				

DELETE SHEET

IRRIGATION CONTROLLER CHART

IQ-5

REVISED BY | DATE REVISED
SAMUEL MEJIA | KEN LUDINGTON
CALCULATED-DESIGNED BY | CHECKED BY
CONSULTANT SENIOR LANDSCAPE ARCHITECT
CHARLES SEAMONS LAMB

STATE OF CALIFORNIA - DEPARTMENT OF TRANSPORTATION
Caltrans

LAST REVISION 12-03-19 | DATE PLOTTED => 17-AUG-2020 | TIME PLOTTED => 16:37

BORDER LAST REVISED 7/2/2010 | USERNAME => kj | DGN FILE => 0812000059sr005.dgn | RELATIVE BORDER SCALE IS IN INCHES 0 1 2 3 | UNIT 2232 | CU 08224 | EA 323031

Dist	COUNTY	ROUTE	POST MILES TOTAL PROJECT	SHEET NO.	TOTAL SHEETS
08	Riv	60	18.8/19.6	234	358

LICENSED LANDSCAPE ARCHITECT

PLANS APPROVAL DATE

THE STATE OF CALIFORNIA OR ITS OFFICERS OR AGENTS SHALL NOT BE RESPONSIBLE FOR THE ACCURACY OR COMPLETENESS OF SCANNED COPIES OF THIS PLAN SHEET.

LICENSED LANDSCAPE ARCHITECT — ERIC FREEMAN FREES — SIGNATURE — EXP 8/31/20 — 5-1-20 DATE — STATE OF CALIFORNIA

EMERALD DESIGN
305 N. HARBOR BLVD. SUITE 222
FULLERTON, CA 92832

CITY OF MORENO VALLEY
14177 FREDERICK STREET
MORENO VALLEY, CALIFORNIA 92552

IRRIGATION CONTROLLER CHART

METER CONTROLLER	STATION	PLANT MATERIAL	CROP COEFFICIENT TYPE	SPRINKLER TYPE	ZONE FLOW RATE	RUN TIME FOR IRRIGATION DAY (MINUTES) JAN	FEB	MAR	APR	MAY	JUN	JUL	AUG	SEP	OCT	NOV	DEC	STATION	PROGRAM A	B	C
B	1	SHRUB/GROUNDCOVER	L		23.50	6	6	6	8	8	9	10	10	9	9	8	6	1	X		
B	2	TREE	L	BUBBLER	9.00	6	6	6	8	8	9	10	10	9	9	8	6	2		X	
B	3	SHRUB/GROUNDCOVER	L	BUBBLER	22.50	6	6	6	8	8	9	10	10	9	9	8	6	3	X		
B	4	SHRUB/GROUNDCOVER	L	BUBBLER	23.00	6	6	6	8	8	9	10	10	9	9	8	6	4	X		
B	5	SHRUB/GROUNDCOVER	L	BUBBLER	24.50	6	6	6	8	8	9	10	10	9	9	8	6	5	X		
B	6	SHRUB/GROUNDCOVER	L	BUBBLER	24.50	6	6	6	8	8	9	10	10	9	9	8	6	6	X		
B	7	SHRUB/GROUNDCOVER	L	BUBBLER	23.00	6	6	6	8	8	9	10	10	9	9	8	6	7	X		
B	8	SHRUB/GROUNDCOVER	L	BUBBLER	20.00	6	6	6	8	8	9	10	10	9	9	8	6	8	X		
B	9	SHRUB/GROUNDCOVER	L	BUBBLER	20.00	6	6	6	8	8	9	10	10	9	9	8	6	9	X		
B	10	SHRUB/GROUNDCOVER	L	BUBBLER	20.00	6	6	6	8	8	9	10	10	9	9	8	6	10	X		
B	11	SHRUB/GROUNDCOVER	L	BUBBLER	20.00	6	6	6	8	8	9	10	10	9	9	8	6	11	X		
B	12	TREE	L	BUBBLER	14.00	6	6	6	8	8	9	10	10	9	9	8	6	12		X	
B	13	HYDROSEED	L	SPRAY	34.00	10	10	10	13	13	15	20	20	15	15	10	10	13			X
B	14	SHRUB/GROUNDCOVER	L	BUBBLER	15.00	6	6	6	8	8	9	10	10	9	9	8	6	14	X		
B	15	SHRUB/GROUNDCOVER	L	BUBBLER	15.00	6	6	6	8	8	9	10	10	9	9	8	6	15	X		
B	16	TREE	L	BUBBLER	5.00	6	6	6	8	8	9	10	10	9	9	8	6	16		X	
B	17	SHRUB/GROUNDCOVER	L	BUBBLER	24.50	6	6	6	8	8	9	10	10	9	9	8	6	17	X		
B	18	SHRUB/GROUNDCOVER	L	BUBBLER	16.50	6	6	6	8	8	9	10	10	9	9	8	6	18	X		
B	19	SHRUB/GROUNDCOVER	L	BUBBLER	26.00	6	6	6	8	8	9	10	10	9	9	8	6	19	X		
B	20	SHRUB/GROUNDCOVER	L	BUBBLER	26.00	6	6	6	8	8	9	10	10	9	9	8	6	20	X		
B	21	SHRUB/GROUNDCOVER	L	BUBBLER	23.50	6	6	6	8	8	9	10	10	9	9	8	6	21	X		
B	22	SHRUB/GROUNDCOVER	L	BUBBLER	21.00	6	6	6	8	8	9	10	10	9	9	8	6	22	X		
B	23	SHRUB/GROUNDCOVER	L	BUBBLER	24.50	6	6	6	8	8	9	10	10	9	9	8	6	23	X		
B	24	SHRUB/GROUNDCOVER	L	BUBBLER	24.50	6	6	6	8	8	9	10	10	9	9	8	6	24	X		
B	25	SHRUB/GROUNDCOVER	L	BUBBLER	24.50	6	6	6	8	8	9	10	10	9	9	8	6	25	X		
B	26	SHRUB/GROUNDCOVER	L	BUBBLER	24.50	6	6	6	8	8	9	10	10	9	9	8	6	26	X		
B	27	SHRUB/GROUNDCOVER	L	BUBBLER	21.00	6	6	6	8	8	9	10	10	9	9	8	6	27	X		
B	28	TREE	L	BUBBLER	7.00	6	6	6	8	8	9	10	10	9	9	8	6	28		X	
B	29	SHRUB/GROUNDCOVER	L	BUBBLER	20.00	6	6	6	8	8	9	10	10	9	9	8	6	29	X		
B	30	SHRUB/GROUNDCOVER	L	BUBBLER	25.00	6	6	6	8	8	9	10	10	9	9	8	6	30	X		
B	31	TREE	L	BUBBLER	3.00	6	6	6	8	8	9	10	10	9	9	8	6	31		X	
B	32	SHRUB/GROUNDCOVER	L	BUBBLER	25.00	6	6	6	8	8	9	10	10	9	9	8	6	32	X		
B	33	SHRUB/GROUNDCOVER	L	BUBBLER	21.00	6	6	6	8	8	9	10	10	9	9	8	6	33	X		
B	34	SHRUB/GROUNDCOVER	L	BUBBLER	21.50	6	6	6	8	8	9	10	10	9	9	8	6	34	X		
B	35	HYDROSEED	L	SPRAY	25.86	10	10	10	13	13	15	20	20	15	15	10	10	35			X
B	36	SHRUB/GROUNDCOVER	L	BUBBLER	24.00	6	6	6	8	8	9	10	10	9	9	8	6	36	X		
B	37	SHRUB/GROUNDCOVER	L	BUBBLER	22.50	6	6	6	8	8	9	10	10	9	9	8	6	37	X		
B	38	TREE	L	BUBBLER	5.00	6	6	6	8	8	9	10	10	9	9	8	6	38		X	
B	39	SHRUB/GROUNDCOVER	L	BUBBLER	20.00	6	6	6	8	8	9	10	10	9	9	8	6	39	X		
B	40	SHRUB/GROUNDCOVER	L	BUBBLER	25.50	6	6	6	8	8	9	10	10	9	9	8	6	40	X		
B	41	SHRUB/GROUNDCOVER	L	BUBBLER	17.00	6	6	6	8	8	9	10	10	9	9	8	6	41	X		
B	42	SHRUB/GROUNDCOVER	L	BUBBLER	18.50	6	6	6	8	8	9	10	10	9	9	8	6	42	X		
TOTAL (MINUTES)						260	260	260	346	346	390	440	440	390	390	340	260				

DELETE SHEET

IRRIGATION CONTROLLER CHART
IQ-6

REVISED BY | DATE REVISED
SAMUEL MEJIA | KEN LUDINGTON
CALCULATED-DESIGNED BY | CHECKED BY
CONSULTANT SENIOR LANDSCAPE ARCHITECT
CHARLES SEAMONS LAMB
STATE OF CALIFORNIA - DEPARTMENT OF TRANSPORTATION
Caltrans

LAST REVISION 12-03-19 | DATE PLOTTED => 17-AUG-2020 | TIME PLOTTED => 16:38

BORDER LAST REVISED 7/2/2010 | USERNAME => kj | DGN FILE => 0812000059sr006.dgn | RELATIVE BORDER SCALE IS IN INCHES 0 1 2 3 | UNIT 2232 | CU 08224 | EA 323031

Dist	COUNTY	ROUTE	POST MILES TOTAL PROJECT	SHEET No.	TOTAL SHEETS
08	Riv	60	18.8/19.6	235	358

LICENSED LANDSCAPE ARCHITECT

PLANS APPROVAL DATE

THE STATE OF CALIFORNIA OR ITS OFFICERS OR AGENTS SHALL NOT BE RESPONSIBLE FOR THE ACCURACY OR COMPLETENESS OF SCANNED COPIES OF THIS PLAN SHEET.

LICENSED LANDSCAPE ARCHITECT ERIC FREEMAN #6245 SIGNATURE EXP. 12/31/22 5-1-20 DATE STATE OF CALIFORNIA

EMERALD DESIGN
305 N. HARBOR BLVD. SUITE 222
FULLERTON, CA 92832

CITY OF MORENO VALLEY
14177 FREDERICK STREET
MORENO VALLEY, CALIFORNIA 92552

PLANTING REQUIREMENTS:

1. AS SHOWN ON PROJECT PLAN
2. SUFFICIENT TO RECEIVE ROOT BALL
3. 2X ROOT BALL WIDTH
4. UNDERLINED PORTIONS OF COMMON NAME AND BOTANICAL NAME INDICATE ABBREVIATION USED ON PLANTING PLAN.

PLANT LEGEND

PLANT GROUP (SIZE)	PLANT No.	SYMBOL	BOTANICAL NAME	COMMON NAME	HOLE SIZE DIAMETER INCH	HOLE SIZE DEPTH INCH	BASIN TYPE	APPLICATION RATES PACKET FERTILIZER EA	SOIL AMENDMENT CF	IRON SULFATE oz	SLOW RELEASE FERTILIZER Plt oz	MINIMUM PLANTING DISTANCE FROM ON CENTER SPACING ft	ETW ft	EP ft	FENCE ft	WALL ft	PAVED DITCH ft	EARTH DITCH ft	REMARKS
K 24" BOX	1		CASSIA LEPTOPHYLLA	GOLD MEDALLION TREE	3	2	I	6	2.7	8	6.4	1	30		6	6	6	8	TREE
	2		CERCIDIUM FLORIDUM 'DESERT MUSEUM'	PALO VERDE	3	2	I	6	2.7	8	6.4	1	30		15	15	15	15	STANDARD TRUNK TREE
	3		EUCALYPTUS SIDEROXYLON	RED IRONBARK	3	2	I	6	2.7	8	6.4	1	30		15	15	15	17	TREE
	4		PINUS ELDARICA	AFGHAN PINE	3	2	I	6	2.7	8	6.4	1	30		15	15	15	17	TREE
B (No. 5)	5		ACACIA REDOLENS 'DESERT CARPET'	PROSTRATE ACACIA	3	2	II	2	1	3	1.6	15	20		15	15	15	17	SHRUB
	6		BACCHARIS PILULARIS 'PIGEON POINT'	DWARF COYOTE BRUSH	3	2	II	2	1	3	1.6	8		15	6	6	10	10	SHRUB
	7		CALYLOPHUS BERLANDIERI	BERLANDIER'S SUNDROPS	3	2	II	2	1	3	1.6	8		6	6	6	6	8	SHRUB
	8		ROSMARINUS OFFICINALIS 'HUNTINGTON CARPET'	HUNTINGTON CARPET ROSEMARY	3	2	II	2	1	3	1.6	10		10	6	6	8	8	SHRUB
	9		BOUGAINVILLEA BRASILIENCIS 'RASPBERRY ICE'	BOUGAINVILLEA	3	2	II	2	1	3	1.6	3		10	6	6	6	8	SHRUB
			CALLISTEMON VIMINALIS 'LITTLE JOHN'	BOTTLEBRUSH	3	2	II	2	1	3	1.6	3		10	15	15	15	17	SHRUB

DELETE SHEET

STATE OF CALIFORNIA - DEPARTMENT OF TRANSPORTATION

Caltrans

CONSULTANT SENIOR LANDSCAPE ARCHITECT: CHARLES SEAMONS LAMB

CALCULATED-DESIGNED BY: SAMUEL MEJIA

CHECKED BY: KEN LUDINGTON

REVISED BY

DATE REVISED

PLANT LEGEND
PL-1

LAST REVISION 12-03-19

DATE PLOTTED => 17-AUG-2020
TIME PLOTTED => 16:39

Dist	COUNTY	ROUTE	POST MILES TOTAL PROJECT	SHEET No.	TOTAL SHEETS
08	Riv	60	18.8/19.6	236	358

LICENSED LANDSCAPE ARCHITECT

PLANS APPROVAL DATE

THE STATE OF CALIFORNIA OR ITS OFFICERS OR AGENTS SHALL NOT BE RESPONSIBLE FOR THE ACCURACY OR COMPLETENESS OF SCANNED COPIES OF THIS PLAN SHEET.

LICENSED LANDSCAPE ARCHITECT ERIC FREEMAN #6245 SIGNATURE EXP. 12/31/22 5-1-20 DATE STATE OF CALIFORNIA

EMERALD DESIGN
305 N. HARBOR BLVD. SUITE 222
FULLERTON, CA 92832

CITY OF MORENO VALLEY
14177 FREDERICK STREET
MORENO VALLEY, CALIFORNIA 92552

NOTES:

1. FOR ACCURATE RIGHT OF WAY DATA, CONTACT RIGHT OF WAY ENGINEERING AT THE DISTRICT OFFICE.
2. FOR SHOULDER PROTECTION, SEE ROADWAY PLANS.

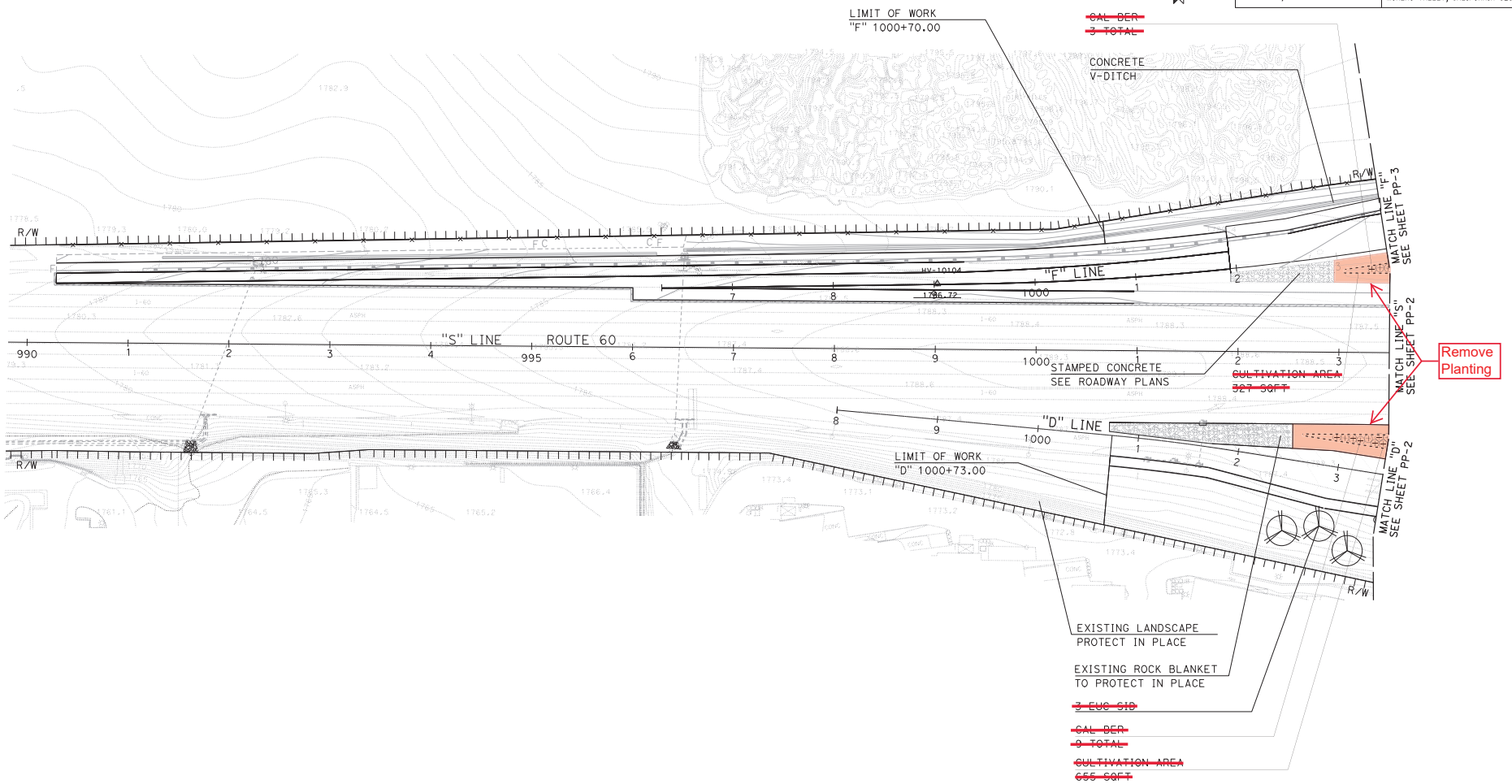

PLANTING PLAN

SCALE: 1" = 50'

PP-1

APPROVED FOR PLANTING WORK ONLY

STATE OF CALIFORNIA - DEPARTMENT OF TRANSPORTATION

Caltrans

CONSULTANT SENIOR LANDSCAPE ARCHITECT: CHARLES SEAMONS LAMB

CALCULATED-DESIGNED BY: SAMUEL MEJIA

CHECKED BY: KEN LUDINGTON

REVISED BY

DATE REVISED

LAST REVISION 12-03-19

DATE PLOTTED => 17-AUG-2020
TIME PLOTTED => 16:40

BORDER LAST REVISED 7/2/2010

USERNAME => kj
DGN FILE => 0812000059su001.dgn

RELATIVE BORDER SCALE IS IN INCHES 0 1 2 3

UNIT 2232

CU 08224

EA 323031

NOTES:

1. FOR ACCURATE RIGHT OF WAY DATA, CONTACT RIGHT OF WAY ENGINEERING AT THE DISTRICT OFFICE.
2. FOR ACCESS ROAD AND MVP DETAILS SEE ROADWAY PLANS
3. FOR SHOULDER PROTECTION, SEE ROADWAY PLANS.

Dist	COUNTY	ROUTE	POST MILES TOTAL PROJECT	SHEET No.	TOTAL SHEETS
08	Riv	60	18.8/19.6	237	358

LICENSED LANDSCAPE ARCHITECT

PLANS APPROVAL DATE

THE STATE OF CALIFORNIA OR ITS OFFICERS OR AGENTS SHALL NOT BE RESPONSIBLE FOR THE ACCURACY OR COMPLETENESS OF SCANNED COPIES OF THIS PLAN SHEET.

LICENSED LANDSCAPE ARCHITECT ERIC FREEMAN #6245 SIGNATURE EXP. 12/31/22 5-1-20 DATE STATE OF CALIFORNIA

EMERALD DESIGN
305 N. HARBOR BLVD. SUITE 222
FULLERTON, CA 92832

CITY OF MORENO VALLEY
14177 FREDERICK STREET
MORENO VALLEY, CALIFORNIA 92552

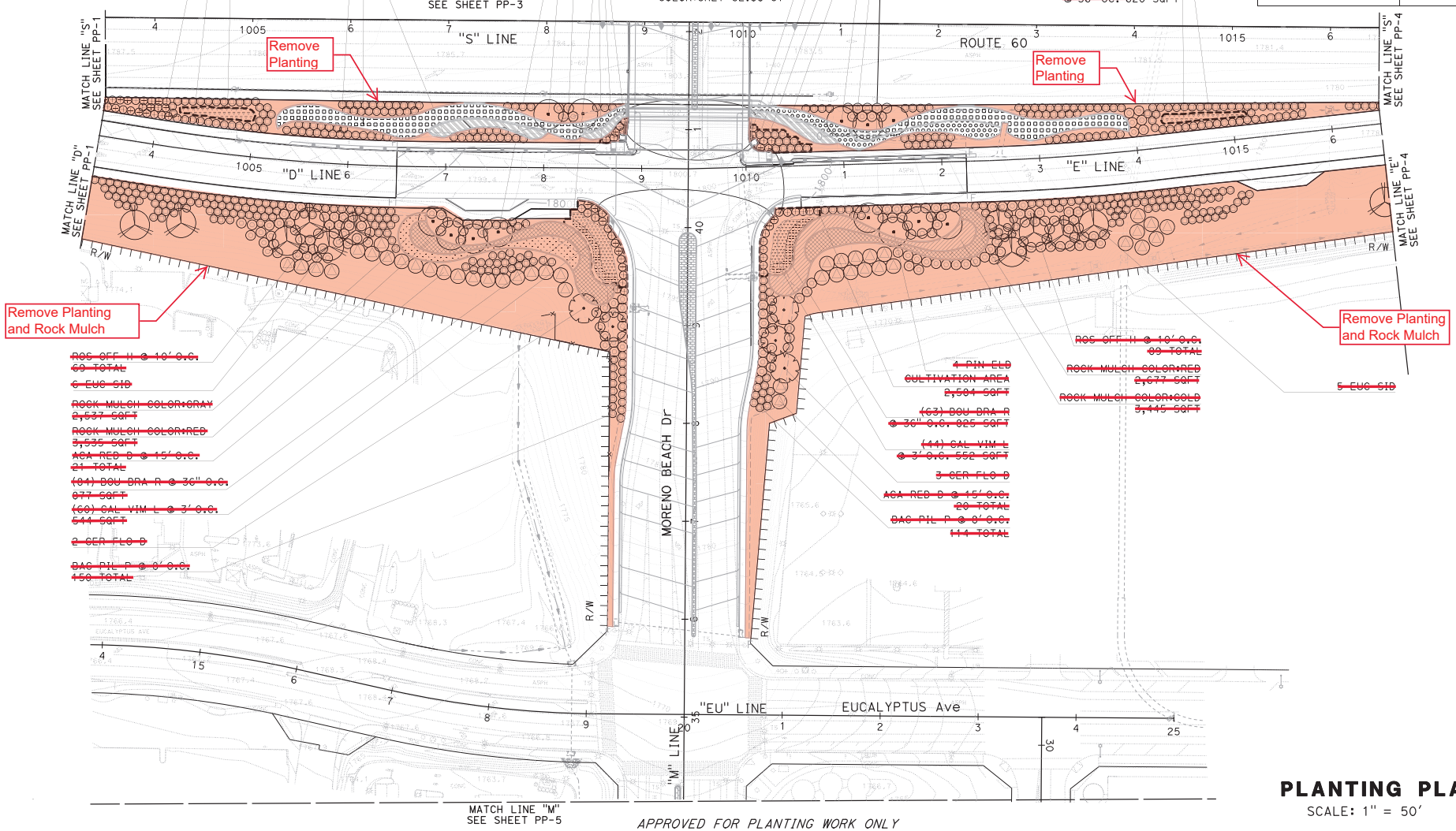

APPROVED FOR PLANTING WORK ONLY

PLANTING PLAN

SCALE: 1" = 50'

PP-2

STATE OF CALIFORNIA - DEPARTMENT OF TRANSPORTATION

Caltrans

CONSULTANT SENIOR LANDSCAPE ARCHITECT: CHARLES SEAMONS LAMB

CALCULATED-DESIGNED BY: SAMUEL MEJIA

CHECKED BY: KEN LUDINGTON

REVISED BY

DATE REVISED

LAST REVISION 12-03-19

DATE PLOTTED => 17-AUG-2020
TIME PLOTTED => 16:42

BORDER LAST REVISED 7/2/2010

USERNAME => kj
DGN FILE => 0812000059su002.dgn

RELATIVE BORDER SCALE IS IN INCHES 0 1 2 3

UNIT 2232

CU 08224

EA 323031

Dist	COUNTY	ROUTE	POST MILES TOTAL PROJECT	SHEET No.	TOTAL SHEETS
08	Riv	60	18.8/19.6	238	358

LICENSED LANDSCAPE ARCHITECT

PLANS APPROVAL DATE

THE STATE OF CALIFORNIA OR ITS OFFICERS OR AGENTS SHALL NOT BE RESPONSIBLE FOR THE ACCURACY OR COMPLETENESS OF SCANNED COPIES OF THIS PLAN SHEET.

LICENSED LANDSCAPE ARCHITECT ERIC FREEMAN #6245 SIGNATURE EXP. 12/31/22 5-1-20 DATE STATE OF CALIFORNIA

EMERALD DESIGN
305 N. HARBOR BLVD. SUITE 222
FULLERTON, CA 92832

CITY OF MORENO VALLEY
14177 FREDERICK STREET
MORENO VALLEY, CALIFORNIA 92552

NOTES:

1. FOR ACCURATE RIGHT OF WAY DATA, CONTACT RIGHT OF WAY ENGINEERING AT THE DISTRICT OFFICE.
2. FOR ACCESS ROAD AND MVP DETAILS, SEE ROADWAY PLANS.
3. FOR SHOULDER PROTECTON, SEE ROADWAY PLANS.

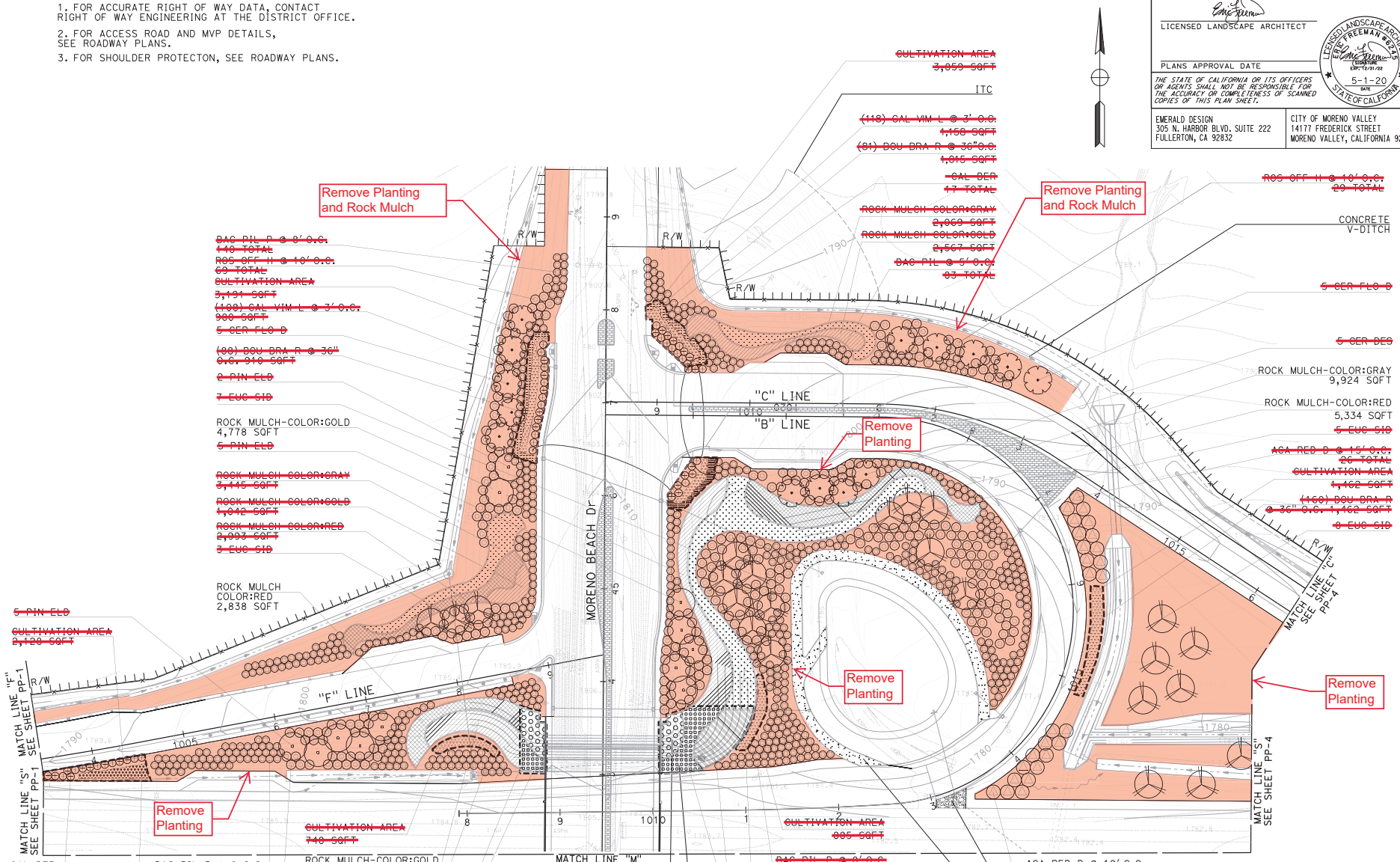

APPROVED FOR PLANTING WORK ONLY

PLANTING PLAN

SCALE: 1" = 50'

PP-3

STATE OF CALIFORNIA - DEPARTMENT OF TRANSPORTATION

Caltrans

CONSULTANT SENIOR LANDSCAPE ARCHITECT: CHARLES SEAMONS LAMB

CALCULATED-DESIGNED BY: SAMUEL MEJIA

CHECKED BY: KEN LUDINGTON

REVISED BY

DATE REVISED

LAST REVISION 12-03-19

DATE PLOTTED => 17-AUG-2020
TIME PLOTTED => 16:43

BORDER LAST REVISED 7/2/2010

USERNAME => kj
DGN FILE => 0812000059su003.dgn

RELATIVE BORDER SCALE IS IN INCHES 0 1 2 3

UNIT 2232

CU 08224

EA 323031

NOTES:

1. FOR ACCURATE RIGHT OF WAY DATA, CONTACT RIGHT OF WAY ENGINEERING AT THE DISTRICT OFFICE.
2. FOR ACCESS ROAD AND MVP DETAILS, SEE ROADWAY PLANS
3. FOR SHOULDER PROTECTION, SEE ROADWAY PLANS.

Dist	COUNTY	ROUTE	POST MILES TOTAL PROJECT	SHEET No.	TOTAL SHEETS
08	Riv	60	18.8/19.6	239	358

LICENSED LANDSCAPE ARCHITECT

PLANS APPROVAL DATE

THE STATE OF CALIFORNIA OR ITS OFFICERS OR AGENTS SHALL NOT BE RESPONSIBLE FOR THE ACCURACY OR COMPLETENESS OF SCANNED COPIES OF THIS PLAN SHEET.

LICENSED LANDSCAPE ARCHITECT ERIC FREEMAN #6245 SIGNATURE EXP. 12/31/22 5-1-20 DATE STATE OF CALIFORNIA

EMERALD DESIGN
305 N. HARBOR BLVD. SUITE 222
FULLERTON, CA 92832

CITY OF MORENO VALLEY
14177 FREDERICK STREET
MORENO VALLEY, CALIFORNIA 92552

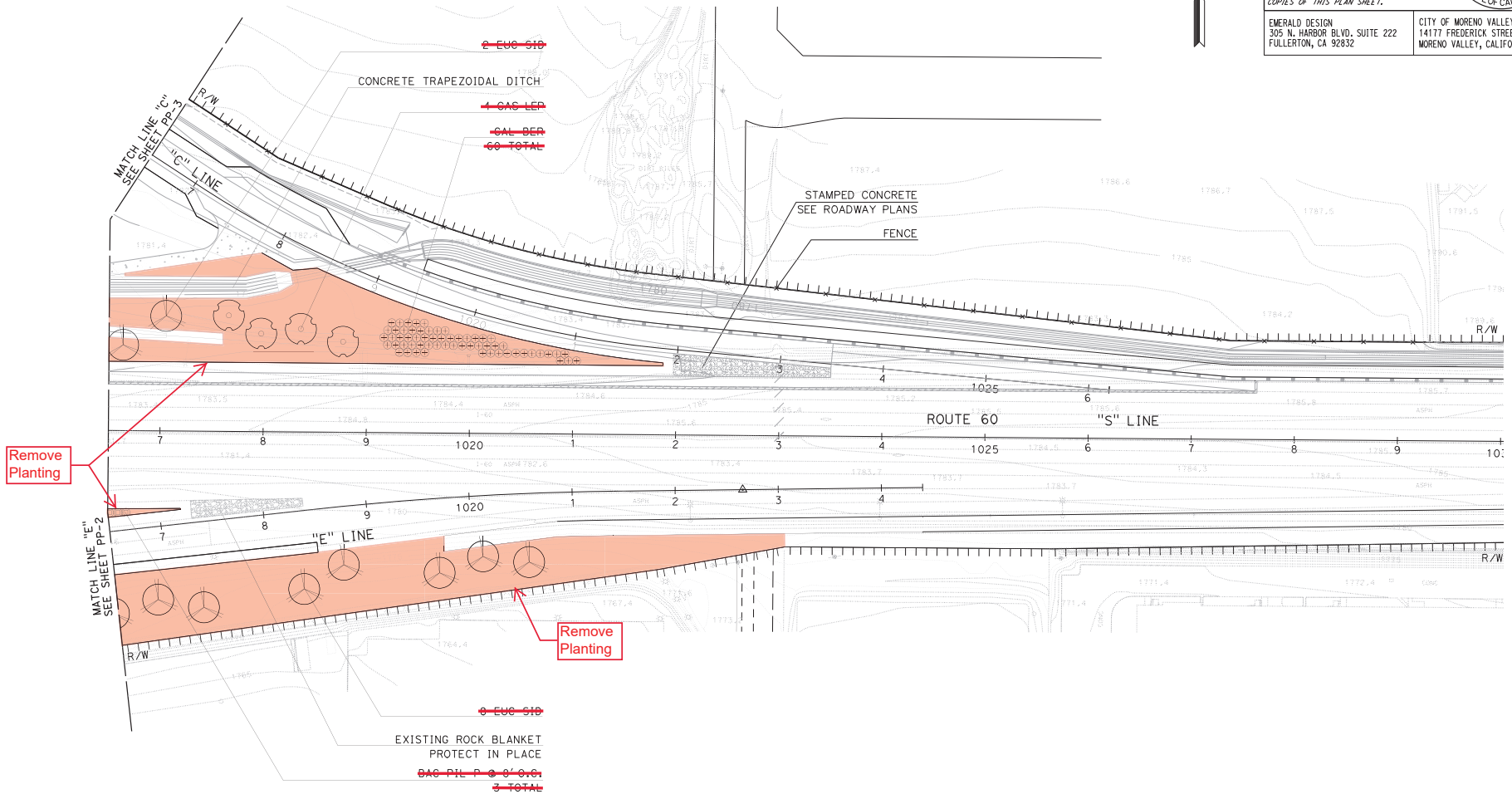

PLANTING PLAN

SCALE: 1" = 50'

PP-4

APPROVED FOR PLANTING WORK ONLY

STATE OF CALIFORNIA - DEPARTMENT OF TRANSPORTATION

Caltrans

CONSULTANT SENIOR LANDSCAPE ARCHITECT: CHARLES SEAMONS LAMB

CALCULATED-DESIGNED BY: SAMUEL MEJIA

CHECKED BY: KEN LUDINGTON

REVISED BY

DATE REVISED

LAST REVISION 12-03-19

DATE PLOTTED => 17-AUG-2020
TIME PLOTTED => 16:45

BORDER LAST REVISED 7/2/2010

USERNAME => kj
DGN FILE => 0812000059su004.dgn

RELATIVE BORDER SCALE IS IN INCHES 0 1 2 3

UNIT 2232

CU 08224

EA 323031

NOTES:

1. IMPROVEMENTS ARE OUTSIDE OF CALTRANS RIGHT-OF-WAY. TO BE MAINTAINED BY THE CITY.
2. CONTRACTOR TO CONTACT AUTO MALL REPRESENTATIVE PRIOR TO INSTALLING REPLACEMENT IRRIGATION IN MEDIAN AND CONNECTION TO POC.

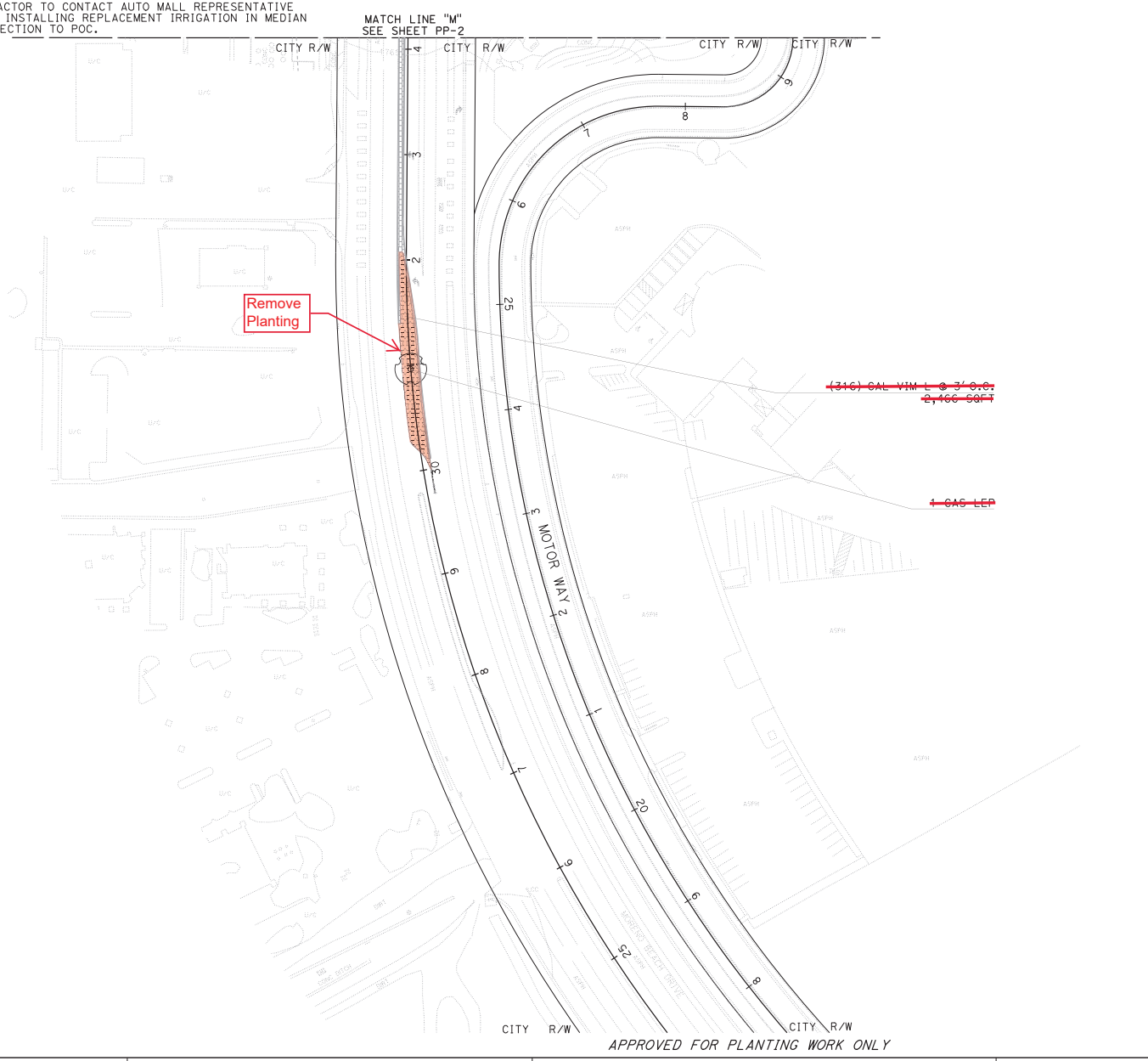

APPROVED FOR PLANTING WORK ONLY

Dist	COUNTY	ROUTE	POST MILES TOTAL PROJECT	SHEET No.	TOTAL SHEETS
08	Riv	60	18.8/19.6	240	358

LICENSED LANDSCAPE ARCHITECT

PLANS APPROVAL DATE

THE STATE OF CALIFORNIA OR ITS OFFICERS OR AGENTS SHALL NOT BE RESPONSIBLE FOR THE ACCURACY OR COMPLETENESS OF SCANNED COPIES OF THIS PLAN SHEET.

LICENSED LANDSCAPE ARCHITECT ERIC FREEMAN #6245 SIGNATURE EXP. 12/31/22 5-1-20 DATE STATE OF CALIFORNIA

EMERALD DESIGN
305 N. HARBOR BLVD. SUITE 222
FULLERTON, CA 92832

CITY OF MORENO VALLEY
14177 FREDERICK STREET
MORENO VALLEY, CALIFORNIA 92552

PLANTING PLAN

SCALE: 1" = 50'

PP-5

STATE OF CALIFORNIA - DEPARTMENT OF TRANSPORTATION

Caltrans

CONSULTANT SENIOR LANDSCAPE ARCHITECT: CHARLES SEAMONS LAMB

CALCULATED-DESIGNED BY: SAMUEL MEJIA

CHECKED BY: KEN LUDINGTON

REVISED BY

DATE REVISED

LAST REVISION 12-03-19

DATE PLOTTED => 17-AUG-2020
TIME PLOTTED => 16:47

BORDER LAST REVISED 7/2/2010

USERNAME => kj
DGN FILE => 0812000059su005.dgn

RELATIVE BORDER SCALE IS IN INCHES 0 1 2 3

UNIT 2232

CU 08224

EA 323031

NOTE:

1. ROCK MULCH MUST BE PLACED TO MINIMIZE MORTAR EXPOSURE TO THE TOP SURFACE.

2. ALL REBAR TO HAVE A MINIMUM 2" END CLEARANCE FROM ALL CONCRETE EDGES.

3. ROCK MULCH TO BE A BLEND OF AGGREGATE SIZES. FOR GRADATION REQUIREMENTS, SEE PROJECT SPECIFICATIONS.

4. FOR LIMITS OF SLOPE PAVING (ROCK MULCH), SEE SHEETS PLD-3 THRU PLD-6.

5. TIE REBAR INTO ADJACENT CONCRETE EDGES WHERE OCCURS. SEE DETAIL PLD-2

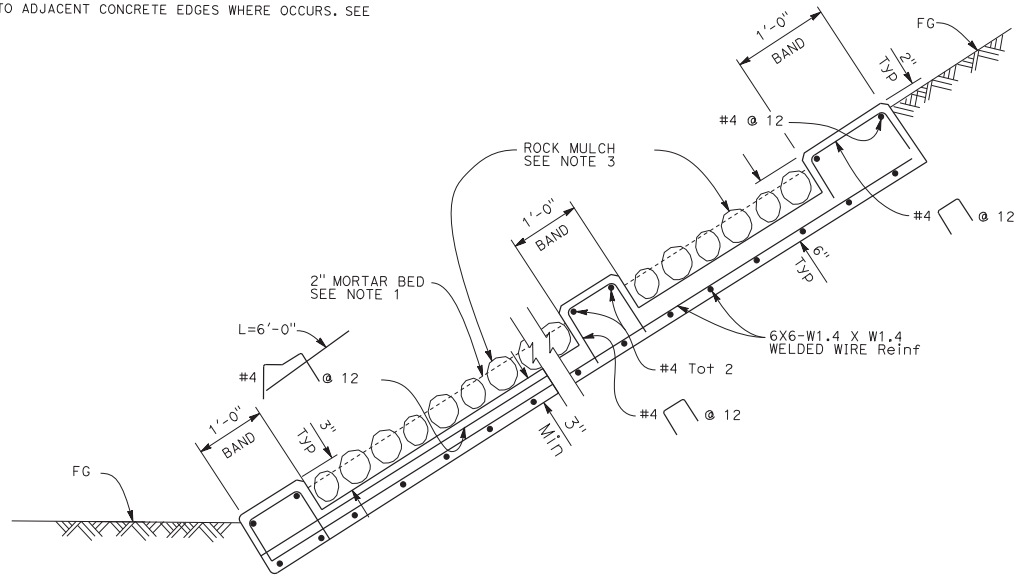

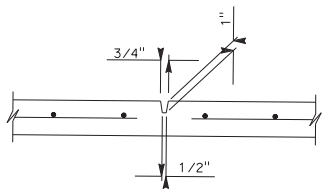

PREFORMED GROOVE

NOTE: PREFORMED GROOVES TO BE PLACED AT 20' SPACING ALONG SLOPE PAVING

TYPICAL SECTION - SLOPE PAVING (ROCK MULCH)

(SLOPES 3:1 OR STEEPER)

NTS

Dist	COUNTY	ROUTE	POST MILES TOTAL PROJECT	SHEET No.	TOTAL SHEETS
08	Riv	60	18.8/19.6	241	358

LICENSED LANDSCAPE ARCHITECT

PLANS APPROVAL DATE

THE STATE OF CALIFORNIA OR ITS OFFICERS OR AGENTS SHALL NOT BE RESPONSIBLE FOR THE ACCURACY OR COMPLETENESS OF SCANNED COPIES OF THIS PLAN SHEET.

LICENSED LANDSCAPE ARCHITECT ERIC FREEMAN FREEMAN Signature Exp: 6/31/20 5-1-20 DATE STATE OF CALIFORNIA

EMERALD DESIGN
305 N. HARBOR BLVD. SUITE 222
FULLERTON, CA 92832

CITY OF MORENO VALLEY
14177 FREDERICK STREET
MORENO VALLEY, CALIFORNIA 92552

REVISED BY	DATE REVISED
SAMUEL MEJIA	
KEN LUDINGTON	

CALCULATED-DESIGNED BY

CHECKED BY

CONSULTANT SENIOR LANDSCAPE ARCHITECT

CHARLES SEAMONS LAMB

STATE OF CALIFORNIA - DEPARTMENT OF TRANSPORTATION

Caltrans

PLANTING DETAILS
PLD-1

LAST REVISION 12-03-19
DATE PLOTTED => 17-AUG-2020
TIME PLOTTED => 16:48

BORDER LAST REVISED 7/2/2010

USERNAME => kj
DGN FILE => 0812000059sv001.dgn

RELATIVE BORDER SCALE IS IN INCHES 0 1 2 3

UNIT 2232

CU 08224

EA 323031

Dist	COUNTY	ROUTE	POST MILES TOTAL PROJECT	SHEET No.	TOTAL SHEETS
08	Riv	60	18.8/19.6	242	358

LICENSED LANDSCAPE ARCHITECT

PLANS APPROVAL DATE

THE STATE OF CALIFORNIA OR ITS OFFICERS OR AGENTS SHALL NOT BE RESPONSIBLE FOR THE ACCURACY OR COMPLETENESS OF SCANNED COPIES OF THIS PLAN SHEET.

LICENSED LANDSCAPE ARCHITECT ERIC FREEMAN #6245 SIGNATURE EXP. 12/31/22 5-1-20 DATE STATE OF CALIFORNIA

EMERALD DESIGN
305 N. HARBOR BLVD. SUITE 222
FULLERTON, CA 92832

CITY OF MORENO VALLEY
14177 FREDERICK STREET
MORENO VALLEY, CALIFORNIA 92552

NOTES:

1. ROCK MULCH SHALL BE A MIX OF 2-3" AND 1/4" ROCK MULCH. (80% 2-3" AND 20% 1/4")
2. CONCRETE STRIPS LOCATED PER PLAN.
3. WEAKENED PLANE JOINTS AT 6' INTERVALS.
4. TIE REBAR INTO ADJACENT SLOPE PAVING WHERE OCCURS. SEE DETAIL PLD-1

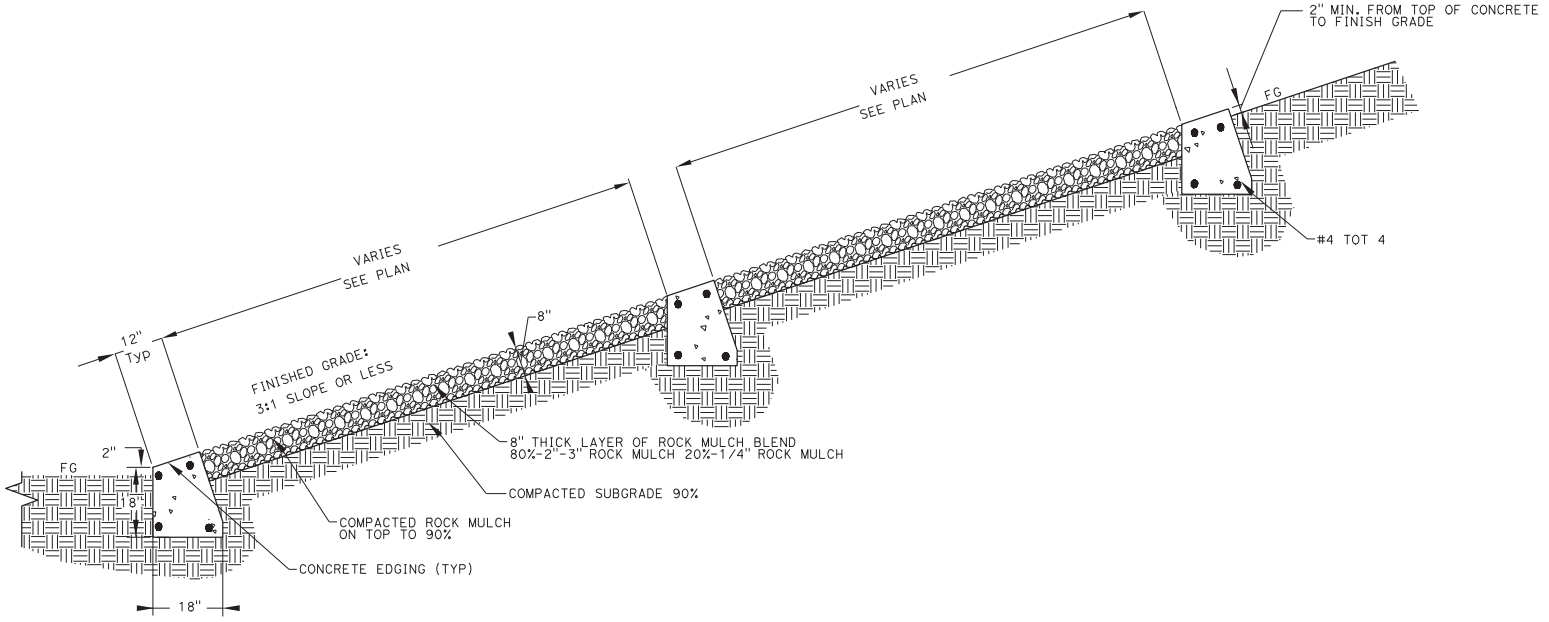

TYPICAL SECTION - ROCK MULCH
(SLOPES 3:1 OR FLATTER)

NTS

PLANTING DETAILS
PLD-2

STATE OF CALIFORNIA - DEPARTMENT OF TRANSPORTATION
Caltrans

CONSULTANT SENIOR LANDSCAPE ARCHITECT: CHARLES SEAMONS LAMB
CALCULATED-DESIGNED BY: SAMUEL MEJIA
CHECKED BY: KEN LUDINGTON
REVISED BY
DATE REVISED

LAST REVISION 12-03-19
DATE PLOTTED => 17-AUG-2020
TIME PLOTTED => 16:50

Dist	COUNTY	ROUTE	POST MILES TOTAL PROJECT	SHEET No.	TOTAL SHEETS
08	Riv	60	18.8/19.6	243	358

LICENSED LANDSCAPE ARCHITECT

PLANS APPROVAL DATE

THE STATE OF CALIFORNIA OR ITS OFFICERS OR AGENTS SHALL NOT BE RESPONSIBLE FOR THE ACCURACY OR COMPLETENESS OF SCANNED COPIES OF THIS PLAN SHEET.

LICENSED LANDSCAPE ARCHITECT ERIC FREEMAN #6245 SIGNATURE EXP. 12/31/22 5-1-20 DATE STATE OF CALIFORNIA

EMERALD DESIGN
300 N. HARBOR BLVD. SUITE 222
FULLERTON, CA 92832

CITY OF MORENO VALLEY
14177 FREDERICK STREET
MORENO VALLEY, CALIFORNIA 92552

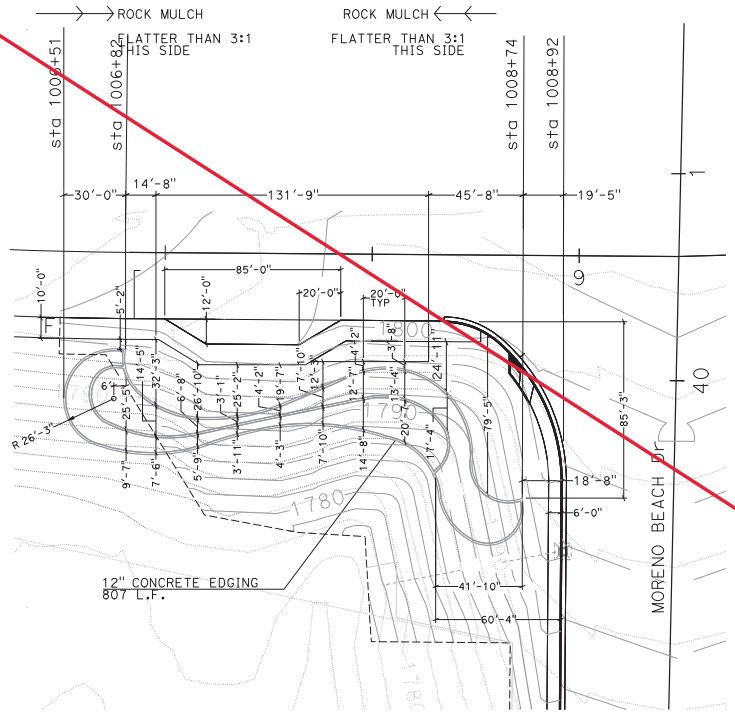

A SCALE: 1" = 30'

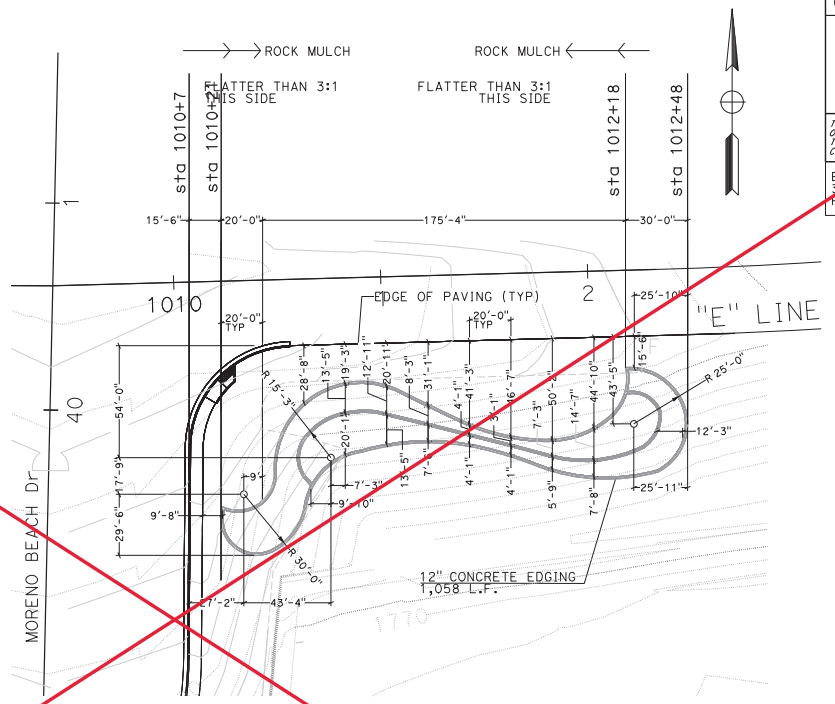

B SCALE: 1" = 30'

NOTES:

1. WORK ON SLOPES SHOWN ON THIS PAGE ARE FLATTER THAN 3:1 SEE DETAIL ON SHEET PLD-2.
2. DIMENSIONS INCLUDE A SLOPE FACTOR TO ACCOUNT FOR THE APPROXIMATE SLOPE THAT WILL BE CONSTRUCTED. ALL DIMENSIONS TO BE FIELD VERIFIED AND APPROVED BY THE ENGINEER.
3. SEE BRIDGE PLANS FOR SLOPE PAVING AT BRIDGE ABUTMENTS.

DELETE SHEET

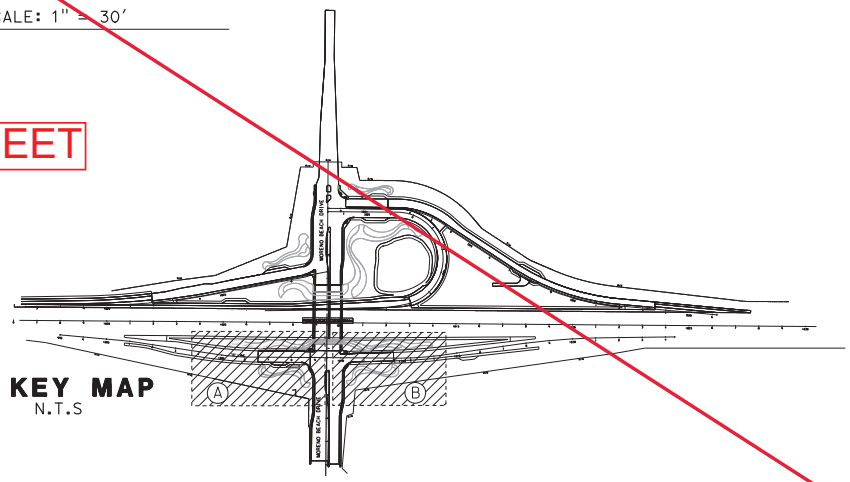

KEY MAP
N.T.S

PLANTING DETAILS

SCALE AS SHOWN

PLD-3

STATE OF CALIFORNIA - DEPARTMENT OF TRANSPORTATION

Caltrans

CONSULTANT SENIOR LANDSCAPE ARCHITECT: CHARLES SEAMONS LAMB

CALCULATED-DESIGNED BY: SAMUEL MEJIA

CHECKED BY: KEN LUDINGTON

REVISED BY

DATE REVISED

LAST REVISION 12-03-19

DATE PLOTTED => 17-AUG-2020
TIME PLOTTED => 16:52

BORDER LAST REVISED 7/2/2010

USERNAME => kj
DGN FILE => 0812000059sv003.dgn

RELATIVE BORDER SCALE IS IN INCHES 0 1 2 3

UNIT 2232

CU 08224

EA 323031

Dist	COUNTY	ROUTE	POST MILES TOTAL PROJECT	SHEET No.	TOTAL SHEETS
08	Riv	60	18.8/19.6	244	358

LICENSED LANDSCAPE ARCHITECT

PLANS APPROVAL DATE

THE STATE OF CALIFORNIA OR ITS OFFICERS OR AGENTS SHALL NOT BE RESPONSIBLE FOR THE ACCURACY OR COMPLETENESS OF SCANNED COPIES OF THIS PLAN SHEET.

LICENSED LANDSCAPE ARCHITECT ERIC FREEMAN 6525 EXP 5/31/22 SIGNATURE 5-1-20 DATE STATE OF CALIFORNIA

EMERALD DESIGN
305 N. HARBOR BLVD. SUITE 222
FULLERTON, CA 92832

CITY OF MORENO VALLEY
14177 FREDERICK STREET
MORENO VALLEY, CALIFORNIA 92552

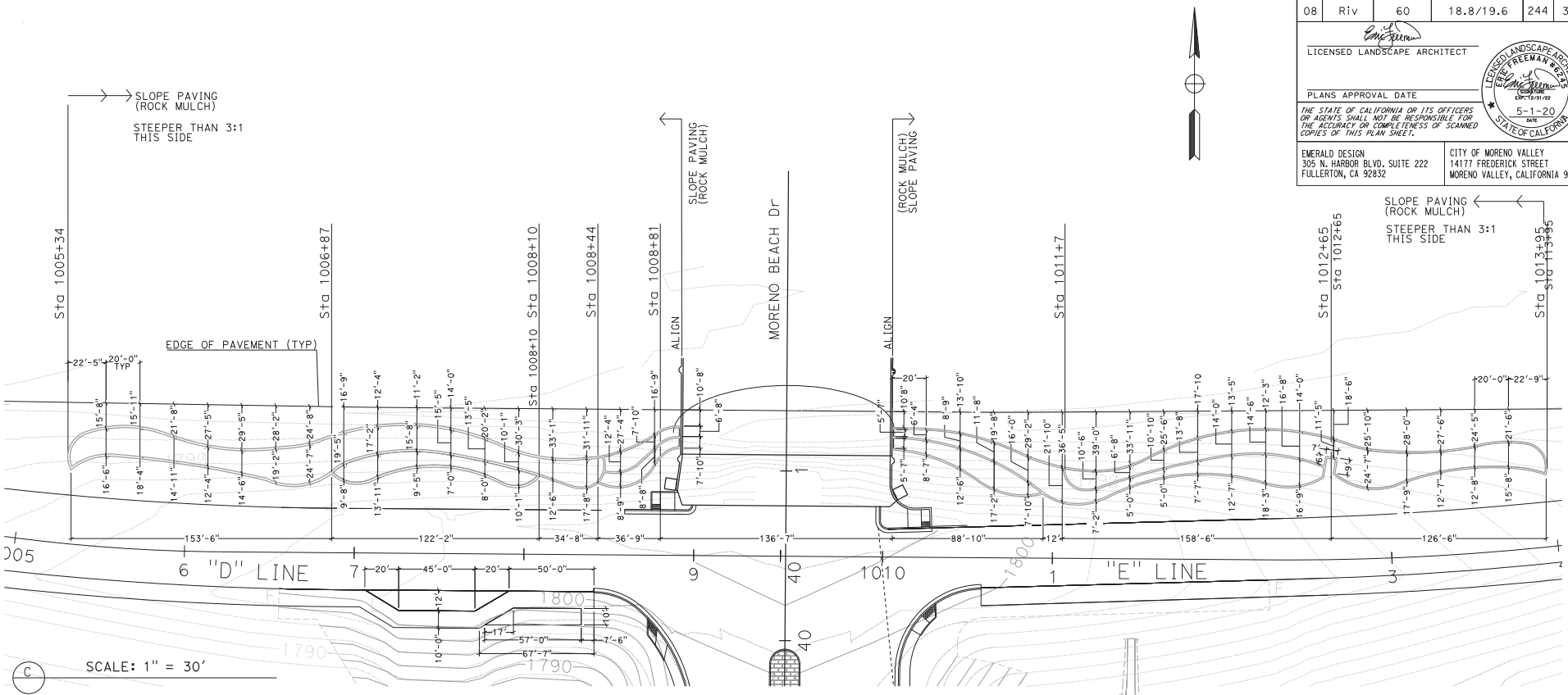

NOTES:

1. WORK ON SLOPES SHOWN ON THIS PAGE ARE LESS STEEPER THAN 3:1 SEE DETAIL ON SHEET PLD-1.
2. DIMENSIONS INCLUDE A SLOPE FACTOR TO ACCOUNT FOR THE APPROXIMATE SLOPE THAT WILL BE CONSTRUCTED. ALL DIMENSIONS TO BE FIELD VERIFIED AND APPROVED BY THE ENGINEER.
3. SEE BRIDGE PLANS FOR SLOPE PAVING AT BRIDGE ABUTMENTS.

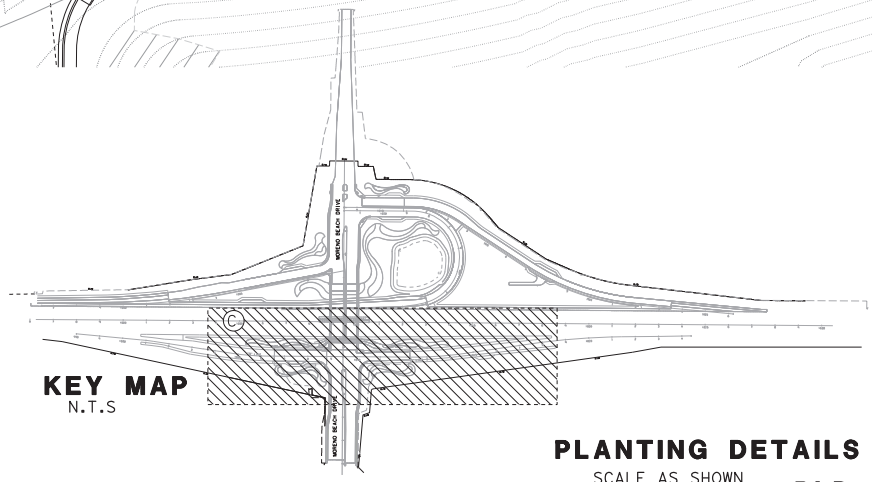

KEY MAP
N.T.S

PLANTING DETAILS

SCALE AS SHOWN

PLD-4

STATE OF CALIFORNIA - DEPARTMENT OF TRANSPORTATION | CONSULTANT SENIOR LANDSCAPE ARCHITECT: CHARLES SEAMONS LAMB | CALCULATED-DESIGNED BY: SAMUEL MEJIA | CHECKED BY: KEN LUDINGTON | REVISED BY | DATE REVISED

LAST REVISION 12-03-19 | DATE PLOTTED => 17-AUG-2020 | TIME PLOTTED => 16:53

BORDER LAST REVISED 7/2/2010 | USERNAME => kj | DGN FILE => 0812000059sv004.dgn | RELATIVE BORDER SCALE IS IN INCHES 0 1 2 3 | UNIT 2232 | CU 08224 | EA 323031

NOTES:

1. WORK ON SLOPES SHOWN ON THIS PAGE VARY FROM STEEPER THAN 3:1 TO FLATTER THAN 3:1
SEE DETAILS ON SHEET PLD-1, AND PLD-2

2. DIMENSIONS INCLUDE A SLOPE FACTOR TO ACCOUNT FOR THE APPROXIMATE SLOPE THAT WILL BE CONSTRUCTED. ALL DIMENSIONS TO BE FIELD VERIFIED AND APPROVED BY THE ENGINEER.

3. SEE BRIDGE PLANS FOR SLOPE PAVING AT BRIDGE ABUTMENTS.

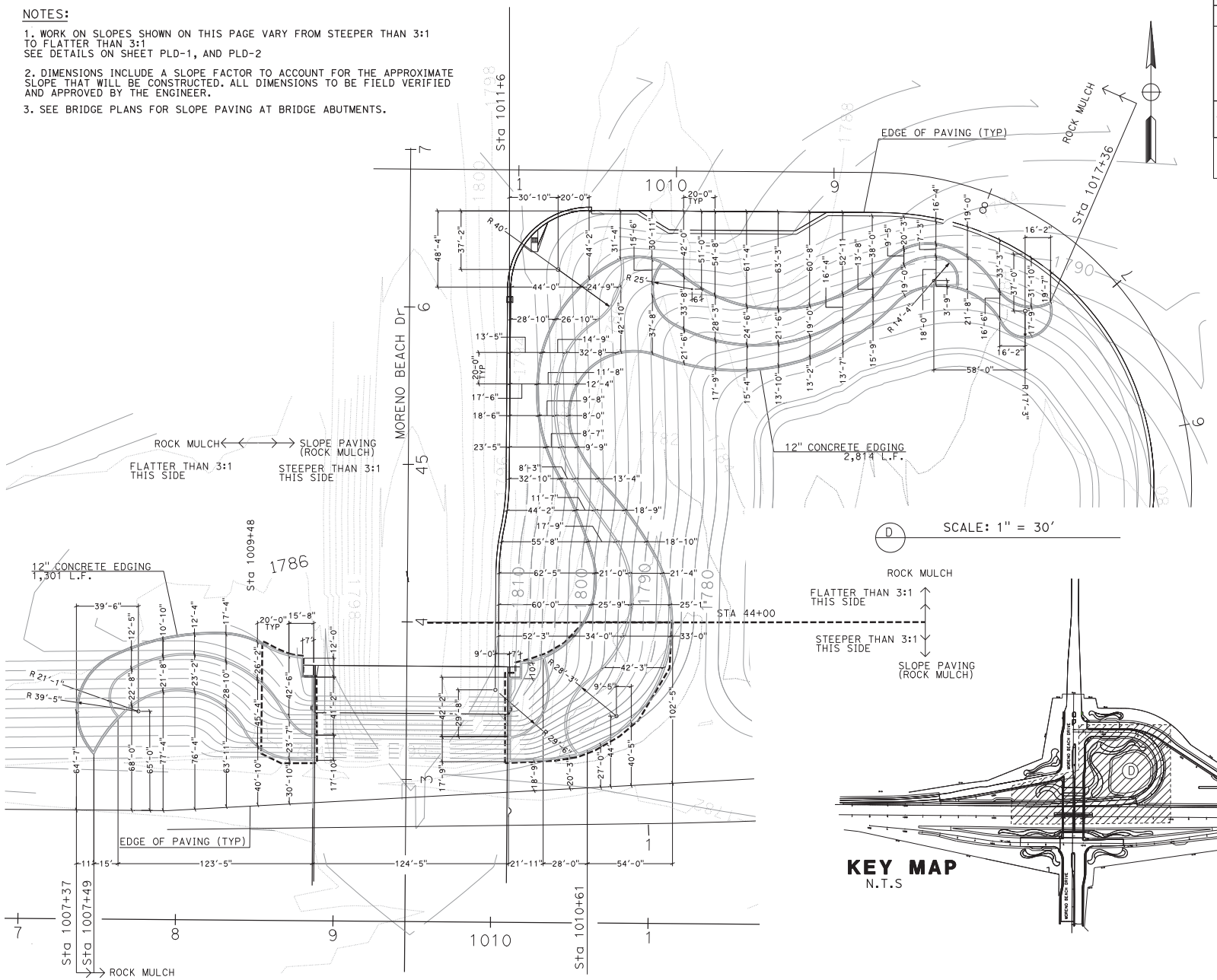

D SCALE: 1" = 30'

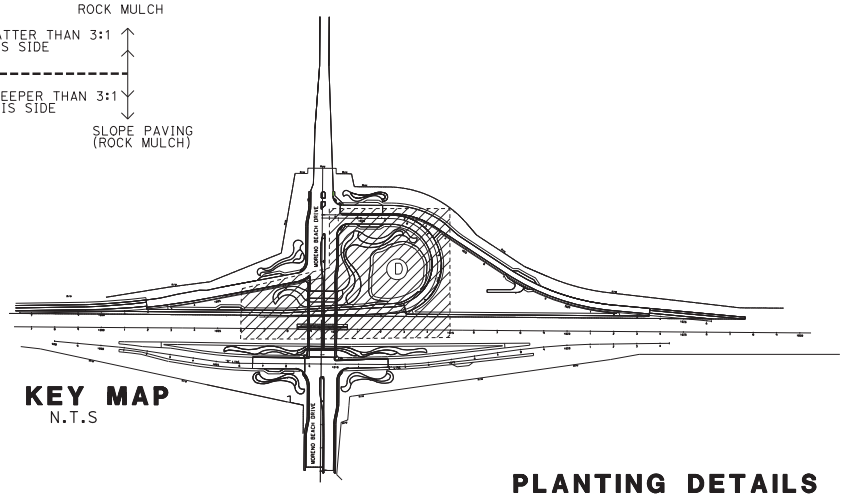

KEY MAP
N.T.S

PLANTING DETAILS

SCALE AS SHOWN

PLD-5

Dist	COUNTY	ROUTE	POST MILES TOTAL PROJECT	SHEET NO.	TOTAL SHEETS
08	Riv	60	18.8/19.6	245	358

LICENSED LANDSCAPE ARCHITECT

PLANS APPROVAL DATE

THE STATE OF CALIFORNIA OR ITS OFFICERS OR AGENTS SHALL NOT BE RESPONSIBLE FOR THE ACCURACY OR COMPLETENESS OF SCANNED COPIES OF THIS PLAN SHEET.

LICENSED LANDSCAPE ARCHITECT ERIC FREEMAN 6232 — Exp. 8/31/20 — 5-1-20 — STATE OF CALIFORNIA

EMERALD DESIGN
305 N. HARBOR BLVD. SUITE 222
FULLERTON, CA 92832

CITY OF MORENO VALLEY
14177 FREDERICK STREET
MORENO VALLEY, CALIFORNIA 92552

STATE OF CALIFORNIA - DEPARTMENT OF TRANSPORTATION — Caltrans

CONSULTANT SENIOR LANDSCAPE ARCHITECT: CHARLES SEAMONS LAMB

CALCULATED-DESIGNED BY: SAMUEL MEJIA — CHECKED BY: KEN LUDINGTON

REVISED BY — DATE REVISED

LAST REVISION 12-03-19 — DATE PLOTTED => 17-AUG-2020 — TIME PLOTTED => 16:54

BORDER LAST REVISED 7/2/2010 | USERNAME => kj | DGN FILE => 0812000059sv005.dgn | RELATIVE BORDER SCALE IS IN INCHES 0 1 2 3 | UNIT 2232 | CU 08224 | EA 323031

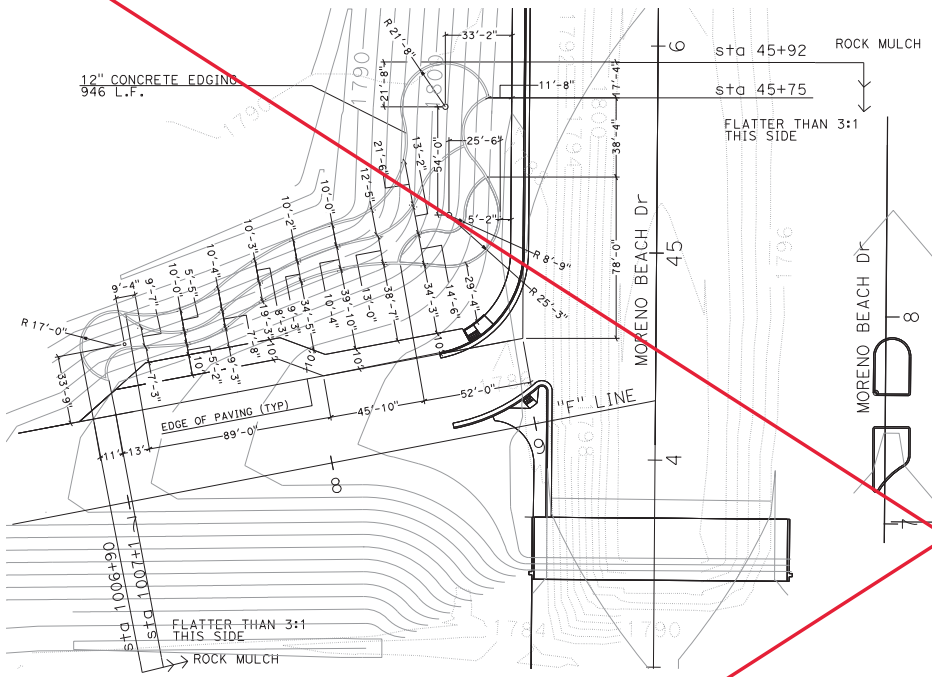

E SCALE: 1" = 30'

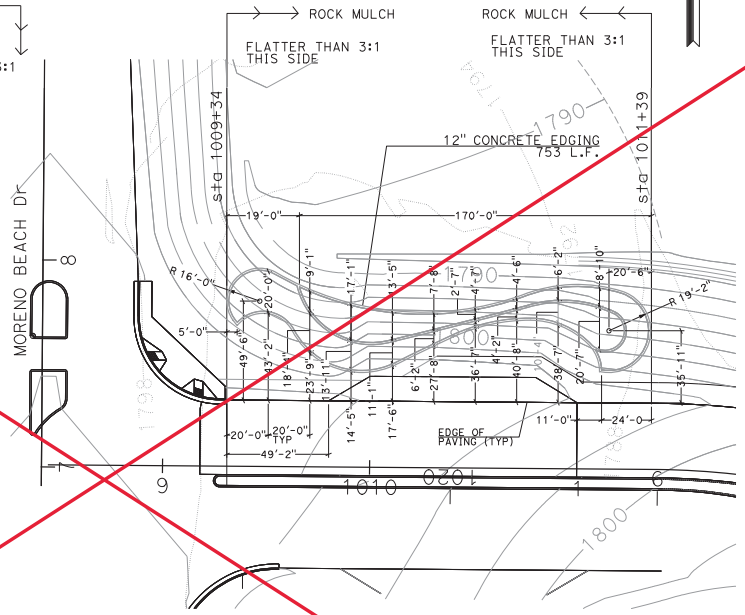

F SCALE: 1" = 30'

DELETE SHEET

NOTES:

1. WORK ON SLOPES SHOWN ON THIS PAGE ARE FLATTER THAN 3:1 SEE DETAIL ON SHEET PDL-2.
2. DIMENSIONS INCLUDE A SLOPE FACTOR TO ACCOUNT FOR THE APPROXIMATE SLOPE THAT WILL BE CONSTRUCTED. ALL DIMENSIONS TO BE FIELD VERIFIED AND APPROVED BY THE ENGINEER.
3. SEE BRIDGE PLANS FOR SLOPE PAVING AT BRIDGE ABUTMENTS.

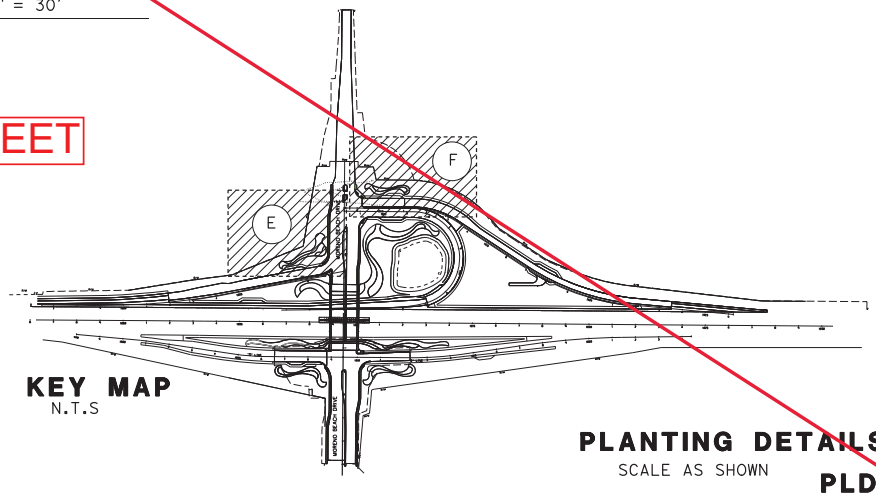

KEY MAP
N.T.S

Dist	COUNTY	ROUTE	POST MILES TOTAL PROJECT	SHEET No.	TOTAL SHEETS
08	Riv	60	18.8/19.6	246	358

LICENSED LANDSCAPE ARCHITECT

PLANS APPROVAL DATE

THE STATE OF CALIFORNIA OR ITS OFFICERS OR AGENTS SHALL NOT BE RESPONSIBLE FOR THE ACCURACY OR COMPLETENESS OF SCANNED COPIES OF THIS PLAN SHEET.

LICENSED LANDSCAPE ARCHITECT ERIC FREEMAN FREEMAN 5-1-20 STATE OF CALIFORNIA

EMERALD DESIGN
305 N. HARBOR BLVD. SUITE 222
FULLERTON, CA 92832

CITY OF MORENO VALLEY
14177 FREDERICK STREET
MORENO VALLEY, CALIFORNIA 92552

REVISED BY	DATE REVISED
SAMUEL MEJIA	
KEN LUDINGTON	

CALCULATED-DESIGNED BY
CHECKED BY

CONSULTANT SENIOR LANDSCAPE ARCHITECT
CHARLES SEAMONS LAMB

STATE OF CALIFORNIA - DEPARTMENT OF TRANSPORTATION
Caltrans

PLANTING DETAILS

SCALE AS SHOWN

PLD-6

LAST REVISION 12-03-19
DATE PLOTTED => 17-AUG-2020
TIME PLOTTED => 16:56

BORDER LAST REVISED 7/2/2010

USERNAME => kj
DGN FILE => 0812000059sv006.dgn

RELATIVE BORDER SCALE IS IN INCHES 0 1 2 3

UNIT 2232 | CU 08224 | EA 323031

Dist	COUNTY	ROUTE	POST MILES TOTAL PROJECT	SHEET No.	TOTAL SHEETS
08	Riv	60	18.8/19.6	247	358

LICENSED LANDSCAPE ARCHITECT

PLANS APPROVAL DATE

THE STATE OF CALIFORNIA OR ITS OFFICERS OR AGENTS SHALL NOT BE RESPONSIBLE FOR THE ACCURACY OR COMPLETENESS OF SCANNED COPIES OF THIS PLAN SHEET.

LICENSED LANDSCAPE ARCHITECT ERIC FREEMAN #6245 SIGNATURE EXP. 12/31/22 5-1-20 DATE STATE OF CALIFORNIA

EMERALD DESIGN
305 N. HARBOR BLVD. SUITE 222
FULLERTON, CA 92832

CITY OF MORENO VALLEY
14177 FREDERICK STREET
MORENO VALLEY, CALIFORNIA 92552

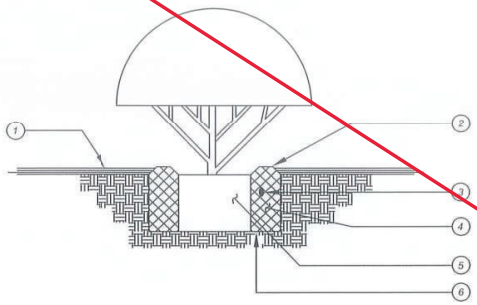

LEGEND:

1. 3" THICK (MINIMUM) SHREDDED MULCH (PER PLAN AS SPECIFIED).
2. 4" BERM TO FORM WATERING BASIN (BERM TO BE REMOVED PRIOR TO MULCH APPLICATION PER THE DISCRETION OF SPECIAL DISTRICTS).
3. PLANT TABS PER MANUFACTURER'S RECOMMENDATIONS.
4. BACKFILL MIX PER SPECIFICATIONS.
5. CONTAINER PLANT ROOT BALL.
6. PLANT PIT TO BE 2 TIMES THE WIDTH OF THE ROOT BALL & SAME DEPTH AS THE ROOT BALL.

NOTES:

1.) UNTANGLE MATTED ROOTS BY LOOSENING ALL ROOTS AT EDGE OF ROOT BALL WITH WATER FROM HOSE. DO NOT CRACK ROOT BALL.

NOT TO SCALE

RECOMMENDED: DIVISION MANAGER 1-16-14 DATE
APPROVED: PUBLIC WORKS DIRECTOR / CITY ENGINEER 1/29/14 DATE

CITY OF MORENO VALLEY
FINANCIAL & MANAGEMENT SERVICES DEPARTMENT - SPECIAL DISTRICTS DIVISION

CONTAINER PLANTING

STANDARD PLAN **MVLI-501A-0**
SHEET 1 OF 4

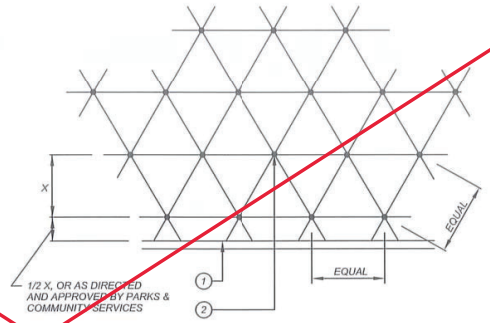

LEGEND:

1. BACK OF CURB OR EDGE OF PAVING
2. PLANT LOCATION

NOTES:

1.) ALL SHRUBS / GROUND COVER TO BE PLANTED AT EQUAL SPACING (TRIANGULAR) UNLESS OTHERWISE INDICATED ON PLANS: SEE LEGEND FOR SPACING REQUIREMENTS.

NOT TO SCALE

RECOMMENDED: DIVISION MANAGER 1/21/14 DATE
APPROVED: PUBLIC WORKS DIRECTOR / CITY ENGINEER 1/29/14 DATE

CITY OF MORENO VALLEY
PARKS AND COMMUNITY SERVICES DEPARTMENT

SHRUB / GROUNDCOVER SPACING

STANDARD PLAN **MVLI-505B-0**
SHEET 2 OF 2

DELETE SHEET

PLANTING DETAILS

CITY OF MORENO VALLEY STANDARD PLANS

PLD-7

STATE OF CALIFORNIA - DEPARTMENT OF TRANSPORTATION

Caltrans

CONSULTANT SENIOR LANDSCAPE ARCHITECT: CHARLES SEAMONS LAMB

CALCULATED-DESIGNED BY: SAMUEL MEJIA

CHECKED BY: KEN LUDINGTON

REVISED BY

DATE REVISED

LAST REVISION 12-03-19

DATE PLOTTED => 17-AUG-2020
TIME PLOTTED => 16:57

Dist	COUNTY	ROUTE	POST MILES TOTAL PROJECT	SHEET No.	TOTAL SHEETS
08	Riv	60	18.8/19.6	248	358

LICENSED LANDSCAPE ARCHITECT

PLANS APPROVAL DATE

THE STATE OF CALIFORNIA OR ITS OFFICERS OR AGENTS SHALL NOT BE RESPONSIBLE FOR THE ACCURACY OR COMPLETENESS OF SCANNED COPIES OF THIS PLAN SHEET.

LICENSED LANDSCAPE ARCHITECT — CHRIS FREEMAN — Signature — Exp. 5-31-20 — 5-1-20 DATE — STATE OF CALIFORNIA

EMERALD DESIGN
305 N. HARBOR BLVD. SUITE 222
FULLERTON, CA 92832

CITY OF MORENO VALLEY
14177 FREDERICK STREET
MORENO VALLEY, CALIFORNIA 92552

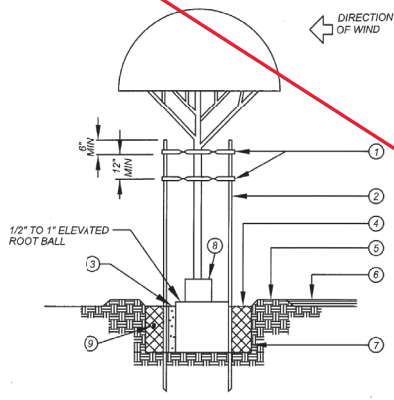

LEGEND:

1. V.I.T. PLASTIC COATED METAL BRACE 2 REQUIRED
2. 2" LODGEPOLE PINE STAKE
3. RAINBIRD ROOT WATERING SYSTEM (RWS) IRRIGATION (EXCEPT TURF AREAS)
4. BACKFILL MIX PER SPECIFICATIONS
5. 4" BERM FOR TEMPORARY WATERING UNTIL SEEDING/SODDING
6. 3" THICK BARK - WHERE APPLICABLE
7. PLANT PIT: 2 TIMES WIDTH OF ROOT BALL & SAME DEPTH AS ROOT BALL
8. TRUNK GUARD IN TURF AREAS
9. PLACE FERTILIZER PACKETS PER MANUFACTURER'S RECOMMENDATION

NOTES:

1) INSTALL STAKES 12" MINIMUM FROM TREE TRUNK AND/OR OUTSIDE ROOTBALL.

NOT TO SCALE

RECOMMENDED: DIVISION MANAGER — DATE 12/22/14
APPROVED: PUBLIC WORKS DIRECTOR / CITY ENGINEER — DATE 1/29/15

CITY OF MORENO VALLEY
PARKS AND COMMUNITY SERVICES DEPARTMENT

TYPICAL DOUBLE STAKE TREE

STANDARD PLAN MVLI-511B-1

SHEET 2 OF 5

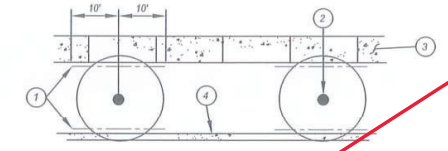

PLAN

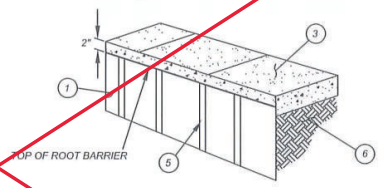

ELEVATION

LEGEND:

1. 24" DEEP LINEAR ROOT BARRIER (PER PLAN AS SPECIFIED). INSTALL IN TRENCH WITH VERTICAL RIBS FACING TOWARDS THE TREE. TOP OF BARRIER TO EXTEND TO TOP OF CURB OR WALK, OR 1" ABOVE FINISH GRADE.
2. TREE TRUNK LOCATION.
3. CONCRETE SIDEWALK OR SLAB.
4. CONCRETE CURB OR SITE WALL.
5. VERTICAL RIBS.
6. COMPACTED SUBGRADE.

NOT TO SCALE

RECOMMENDED: DIVISION MANAGER — DATE 1/24/14
APPROVED: PUBLIC WORKS DIRECTOR / CITY ENGINEER — DATE 1/29/14

CITY OF MORENO VALLEY
PARKS AND COMMUNITY SERVICES DEPARTMENT

LINEAR ROOT BARRIER

STANDARD PLAN MVLI-524B-0

SHEET 2 OF 2

DELETE SHEET

PLANTING DETAILS

CITY OF MORENO VALLEY STANDARD PLANS

PLD-8

STATE OF CALIFORNIA - DEPARTMENT OF TRANSPORTATION

CONSULTANT SENIOR LANDSCAPE ARCHITECT: CHARLES SEAMONS LAMB

CALCULATED-DESIGNED BY | CHECKED BY

REVISED BY: SAMUEL MEJIA | KEN LUDINGTON

DATE REVISED

LAST REVISION 12-03-19

DATE PLOTTED => 17-AUG-2020
TIME PLOTTED => 16:59

BORDER LAST REVISED 7/2/2010

USERNAME => kj
DGN FILE => 0812000059sv008.dgn

RELATIVE BORDER SCALE IS IN INCHES 0 1 2 3

UNIT 2232 | CU 08224 | EA 323031

DELETE TABLE

~~PLANT QUANTITIES~~

BOTANICAL NAME	COMMON NAME	PLANT GROUP B	PLANT GROUP K	PLANT BASIN ② PACKET FERTILIZER	PLANT BASIN ② SOIL AMENDMENT	PLANT BASIN ② IRON SULFATE	PLANT BASIN ② SLOW-RELEASE FERTILIZER
		EA	EA	EA	CY	LB	LB
CASSIA LEPTOPHYLLA	GOLD MEDALLION TREE		5	6	.1	.5	.4
CERCIDIUM FLORIDUM 'DESERT MUSEUM'	PALO VERDE		19	6	.1	.5	.4
EUCALYPTUS SIDEROXYLON	RED IRONBARK		47	6	.1	.5	.4
PINUS ELDARICA	AFGHAN PINE		25	6	.1	.5	.4
ACACIA REDOLENS 'DESERT CARPET'	PROSTRATE ACACIA	68		2	.04	.2	.1
BACCHARIS PILULARIS 'PIGEON POINT'	DWARF COYOTE BRUSH	1,098		2	.04	.2	.1
BOUGAINVILLEA BRASILIENCIS 'RASPBERRY ICE'	BOUGAINVILLEA	711		2	.04	.2	.1
CALLISTEMON VIMINALIS 'LITTLE JOHN'	BOTTLEBRUSH	817		2	.04	.2	.1
CALYLOPHUS BERLANDIERI	BERLANDIER'S SUNDROPS	191		2	.04	.2	.1
ROSMARINUS OFFICINALIS 'HUNTINGTON CARPET'	HUNTINGTON CARPET ROSEMARY	489		2	.04	.2	.1
	TOTAL	3,374	96	7,324	144.6	722.8	375.8

PLANT AREA QUANTITIES

DELETE

PP SHEET	CULTIVATION AREA CULTIVATION	SOIL AMENDMENT	IRON SULFATE	SLOW-RELEASE FERTILIZER	WOOD MULCH	① DECORATIVE ROCK MULCH	① SLOPE PAVING (ROCK MULCH)
	SQYD	CY	LB	LB	CY	SF	CY
PP1	109	3	1.5	2.4	12	0	0
PP2	760.5	3.9	19.5	122	926	12,194	663
PP3	1,028.9	4.2	21	234.6	1,374	38,148	281
PP4	0	1.2	6	16.8	150	0	0
TOTAL	1,898.4	9.6	48	375.8	2,462	50,342	994

Replace with:
PP1 = 0
PP2 = 0
PP3 = 26,032
PP4 = 0
TOTAL = 26,032

NOTES:

① FOR ROCK MULCH AND SLOPE PAVING (ROCK MULCH) SAMPLES WILL BE AVAILABLE AT THE CITY OFFICE.

②QUANTITIES ARE PER PLANT

3. A 15% FACTOR HAS BEEN ADDED TO ROCK MULCH AND SLOPE PAVING (ROCK MULCH) AND CONCRETE STRIP QUANTITIES TO ACCOUNT FOR GRADED SLOPE CONDITIONS.

HARDSCAPE

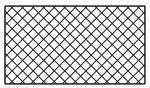
ROCK MULCH
COLOR:RED
TOTAL: ~~17,377~~ SQFT
8,172

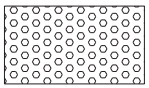
SLOPE PAVING
(ROCK MULCH)
COLOR: RED
TOTAL: 479.22 CY

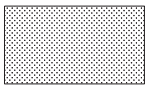
ROCK MULCH
COLOR:GRAY
TOTAL: ~~17,795~~ SQFT
9,924

SLOPE PAVING
(ROCK MULCH)
COLOR:GRAY
TOTAL: 222.37 CY

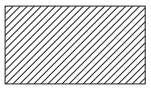
ROCK MULCH
COLOR:GOLD
TOTAL: ~~14,090~~ SQFT
7,936

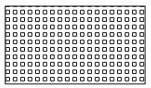
SLOPE PAVING
(ROCK MULCH)
COLOR: GOLD
TOTAL: 242.68 CY

12" CONCRETE EDGING
COLOR: NATURAL CONCRETE
TOTAL: ~~7,166~~ LF
4,115

Dist	COUNTY	ROUTE	POST MILES TOTAL PROJECT	SHEET No.	TOTAL SHEETS
08	Riv	60	18.8/19.6	249	358

LICENSED LANDSCAPE ARCHITECT

PLANS APPROVAL DATE

THE STATE OF CALIFORNIA OR ITS OFFICERS OR AGENTS SHALL NOT BE RESPONSIBLE FOR THE ACCURACY OR COMPLETENESS OF SCANNED COPIES OF THIS PLAN SHEET.

LICENSED LANDSCAPE ARCHITECT ERIC FREEMAN FREEMAN 5-1-20 STATE OF CALIFORNIA

EMERALD DESIGN
305 N. HARBOR BLVD. SUITE 222
FULLERTON, CA 92832

CITY OF MORENO VALLEY
14177 FREDERICK STREET
MORENO VALLEY, CALIFORNIA 92552

REVISED BY | DATE REVISED
SAMUEL MEJIA | KEN LUDINGTON
CALCULATED-DESIGNED BY | CHECKED BY
CONSULTANT SENIOR LANDSCAPE ARCHITECT
CHARLES SEAMONS LAMB

STATE OF CALIFORNIA - DEPARTMENT OF TRANSPORTATION
Caltrans

LAST REVISION 12-03-19
DATE PLOTTED => 17-AUG-2020
TIME PLOTTED => 17:01

PLANTING QUANTITIES

NO SCALE

PQ-1

BORDER LAST REVISED 7/2/2010 | USERNAME => kj | DGN FILE => 0812000059sw001.dgn | RELATIVE BORDER SCALE IS IN INCHES 0 1 2 3 | UNIT 2232 | CU 08224 | EA 323031

Dist	COUNTY	ROUTE	POST MILES TOTAL PROJECT	SHEET No.	TOTAL SHEETS
08	Riv	60	18.8/19.6	250	358

LICENSED LANDSCAPE ARCHITECT

PLANS APPROVAL DATE

THE STATE OF CALIFORNIA OR ITS OFFICERS OR AGENTS SHALL NOT BE RESPONSIBLE FOR THE ACCURACY OR COMPLETENESS OF SCANNED COPIES OF THIS PLAN SHEET.

LICENSED LANDSCAPE ARCHITECT ERIC FREEMAN 6/25/20 Signature 12/31/22 Renewal Date 6/27/20 Date STATE OF CALIFORNIA

EMERALD DESIGN
305 N. HARBOR BLVD. SUITE 222
FULLERTON, CA 92832

CITY OF MORENO VALLEY
14177 FREDERICK STREET
MORENO VALLEY, CALIFORNIA 92552

NOTES:

1. CONTRACTOR SHALL TRACK WALK AFTER INCORPORATION PROCESS.
2. COMPOST WILL BE 4" DEPTH FOR EMBANKMENT SLOPES 4:1 OR FLATTER AND 2" DEPTH FOR SLOPES 3:1 AND STEEPER.

SEED MIX I

SEED	BOTANICAL NAME (COMMON NAME)	PERCENT GERMINATION (MINIMUM)	POUNDS PURE LIVE SEED PER ACRE (SLOPE
MIX I	ACMISPON AMERICANUS (SPANISH CLOVER)	60	1
	ASCLEPIAS FASCICULARIS (NARROWLEAF MILKWEED)	40	0.50
	LASTHENIA CALIFORNICA (CALIFORNIA GOLDFIELDS)	40	0.25
	LAYIA PLATYGLOSSA (COASTAL TIDYTIPS)	40	0.25
	LUPINUS BICOLOR (BICOLOR LUPINE)	70	3
	NEMOPHILA MENZIESII (BABY BLUE EYES)	40	0.25
	TRIFOLIUM WILLDENOVII (TOMCAT CLOVER)	40	2
	ACHILLEA MILLEFOLIUM (WESTERN YARROW)	60	0.50
	CAREX PRAEGRACILIS (CLUSTERED FIELD SEDGE)	60	1
	HORDEUM BRACHYANTHERUM (BARLEY)	60	6
		TOTAL	14.75

SEED MIX II

SEED	BOTANICAL NAME (COMMON NAME)	PERCENT GERMINATION (MINIMUM)	POUNDS PURE LIVE SEED PER ACRE (SLOPE
MIX II	BROMUS CARINATUS (CALIFORNIA BROME GRASS)	70	10
	ASCLEPIAS FASCICULARIS (NARROWLEAF MILKWEED)	40	0.50
	ELYMUS GLAUCUS (AUSTRIAN BROME GRASS)	60	6
	HORDEUM BRACHYANTHERUM (MEADOW BARLEY)	60	4
	KOELERIA MACRANTHA (PRAIRIE JUNEGRASS)	60	2
	MELICA IMPERFECTA (COAST RANGE ONION GRASS)	50	2
	STIPA PULCHRA (PURPLE NEEDLEGRASS)	70	4
		TOTAL	28.5

EROSION CONTROL TYPE 1

SEQUENCE	ITEM	MATERIAL		APPLICATION RATE	DEPTH	REMARKS
		DESCRIPTION	TYPE			
STEP 1	HYDROSEED	SEED	MIX I	14.75 LB/ACRE		
		FIBER	WOOD	2,000 LB/ACRE		
	HYDROMULCH	TACKIFIER	GUAR	150 LB/ACRE		

EROSION CONTROL TYPE 2

SEQUENCE	ITEM	MATERIAL		APPLICATION RATE	DEPTH	REMARKS
		DESCRIPTION	TYPE			
STEP 1	TOPSOIL	TOPSOIL	GRADE A	130 CY/ACRE		
STEP 2	COMPOST	COMPOST	FINE	160 CY/ACRE		SEE NOTE 2
STEP 3	INCORPORATE MATERIALS	COMPOST			6"	SEE NOTE 1
STEP 4	FIBER ROLLS	FIBER ROLL	10" TO 12" Dia.			TYPE 1 INSTALLATION
STEP 5	HYDROSEED	SEED	MIX II	28.5 LB/ACRE		
		FIBER	WOOD	2,000 LB/ACRE		
	HYDROMULCH	TACKIFIER	GUAR	150 LB/ACRE		

EROSION CONTROL LEGEND

NO SCALE

ECL-1

STATE OF CALIFORNIA - DEPARTMENT OF TRANSPORTATION
Caltrans DESIGN BRANCH H

CONSULTANT SENIOR LANDSCAPE ARCHITECT: ERIC FREEMAN
CALCULATED-DESIGNED BY: ERIK ADELMAN
CHECKED BY: ERIC FREEMAN
REVISED BY
DATE REVISED

LAST REVISION 00-00-00
DATE PLOTTED => $DATE
TIME PLOTTED => $TIME

NOTE:

FOR ACCURATE RIGHT OF WAY DATA, CONTACT
RIGHT OF WAY ENGINEERING AT THE DISTRICT OFFICE.

LEGEND

EROSION CONTROL (TYPE 1)

EROSION CONTROL (TYPE 2)

Dist	COUNTY	ROUTE	POST MILES TOTAL PROJECT	SHEET No.	TOTAL SHEETS
08	Riv	60	18.8/19.6	251	358

LICENSED LANDSCAPE ARCHITECT

PLANS APPROVAL DATE

THE STATE OF CALIFORNIA OR ITS OFFICERS OR AGENTS SHALL NOT BE RESPONSIBLE FOR THE ACCURACY OR COMPLETENESS OF SCANNED COPIES OF THIS PLAN SHEET.

EMERALD DESIGN
305 N. HARBOR BLVD. SUITE 222
FULLERTON, CA 92832

CITY OF MORENO VALLEY
14177 FREDERICK STREET
MORENO VALLEY, CALIFORNIA 92552

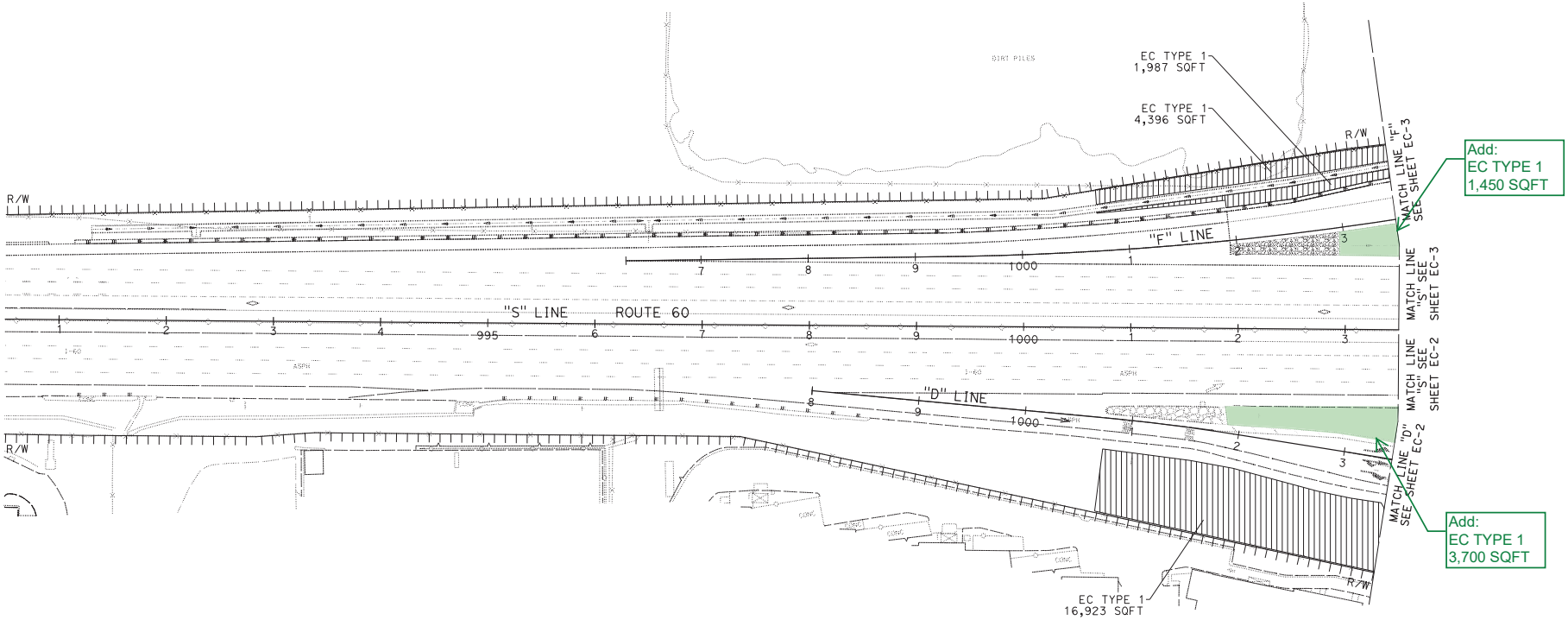

APPROVED FOR EROSION CONTROL WORK ONLY

EROSION CONTROL

SCALE: 1" = 50'

EC-1

STATE OF CALIFORNIA - DEPARTMENT OF TRANSPORTATION
Caltrans
DESIGN BRANCH H
CONSULTANT SENIOR LANDSCAPE ARCHITECT
ERIC FREEMAN
CALCULATED-DESIGNED BY
ERIK ADELMAN
CHECKED BY
ERIC FREEMAN
REVISED BY
DATE REVISED

LAST REVISION 00-00-00
DATE PLOTTED => 03-AUG-2020
TIME PLOTTED => 13:53

BORDER LAST REVISED 7/2/2010

USERNAME => p003256D
DGN FILE => 0812000059te001.dgn

RELATIVE BORDER SCALE IS IN INCHES 0 1 2 3

UNIT 2232

PROJECT NUMBER & PHASE 08120000591

NOTE:

FOR ACCURATE RIGHT OF WAY DATA, CONTACT
RIGHT OF WAY ENGINEERING AT THE DISTRICT OFFICE.

Dist	COUNTY	ROUTE	POST MILES TOTAL PROJECT	SHEET No.	TOTAL SHEETS
08	Riv	60	18.8/19.6	252	358

LICENSED LANDSCAPE ARCHITECT

PLANS APPROVAL DATE

THE STATE OF CALIFORNIA OR ITS OFFICERS OR AGENTS SHALL NOT BE RESPONSIBLE FOR THE ACCURACY OR COMPLETENESS OF SCANNED COPIES OF THIS PLAN SHEET.

LICENSED LANDSCAPE ARCHITECT — ERIC FREEMAN — Signature — 12/31/08 Renewal Date — 5/27/20 Date — STATE OF CALIFORNIA

EMERALD DESIGN
305 N. HARBOR BLVD. SUITE 222
FULLERTON, CA 92832

CITY OF MORENO VALLEY
14177 FREDERICK STREET
MORENO VALLEY, CALIFORNIA 92552

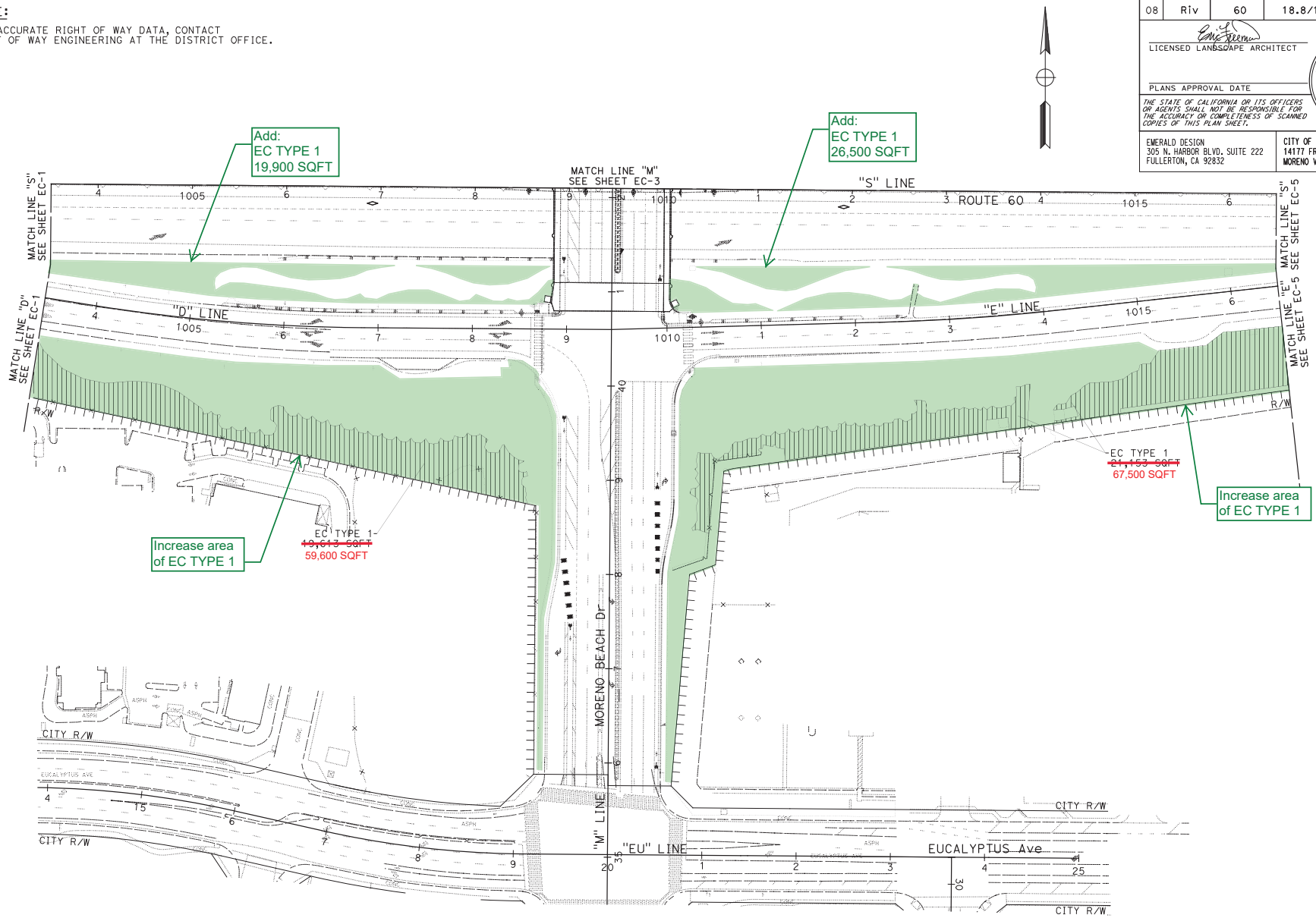

APPROVED FOR EROSION CONTROL WORK ONLY

EROSION CONTROL

SCALE: 1" = 50'

EC-2

STATE OF CALIFORNIA - DEPARTMENT OF TRANSPORTATION
Caltrans
DESIGN BRANCH H

CONSULTANT SENIOR LANDSCAPE ARCHITECT: ERIC FREEMAN

CALCULATED-DESIGNED BY: ERIK ADELMAN
CHECKED BY: ERIC FREEMAN

REVISED BY | DATE REVISED

LAST REVISION 00-00-00
DATE PLOTTED => 03-AUG-2020
TIME PLOTTED => 13:53

BORDER LAST REVISED 7/2/2010

USERNAME => p003256D
DGN FILE => 0812000059te002.dgn

RELATIVE BORDER SCALE IS IN INCHES 0 1 2 3

UNIT 2232

PROJECT NUMBER & PHASE 08120000591

NOTE:

FOR ACCURATE RIGHT OF WAY DATA, CONTACT RIGHT OF WAY ENGINEERING AT THE DISTRICT OFFICE.

Dist	COUNTY	ROUTE	POST MILES TOTAL PROJECT	SHEET No.	TOTAL SHEETS
08	Riv	60	18.8/19.6	253	358

LICENSED LANDSCAPE ARCHITECT

PLANS APPROVAL DATE

THE STATE OF CALIFORNIA OR ITS OFFICERS OR AGENTS SHALL NOT BE RESPONSIBLE FOR THE ACCURACY OR COMPLETENESS OF SCANNED COPIES OF THIS PLAN SHEET.

LICENSED LANDSCAPE ARCHITECT ERIC FREEMAN #6355 Signature 12/31/22 Renewal Date 5/27/20 Date STATE OF CALIFORNIA

EMERALD DESIGN
305 N. HARBOR BLVD. SUITE 222
FULLERTON, CA 92832

CITY OF MORENO VALLEY
14177 FREDERICK STREET
MORENO VALLEY, CALIFORNIA 92552

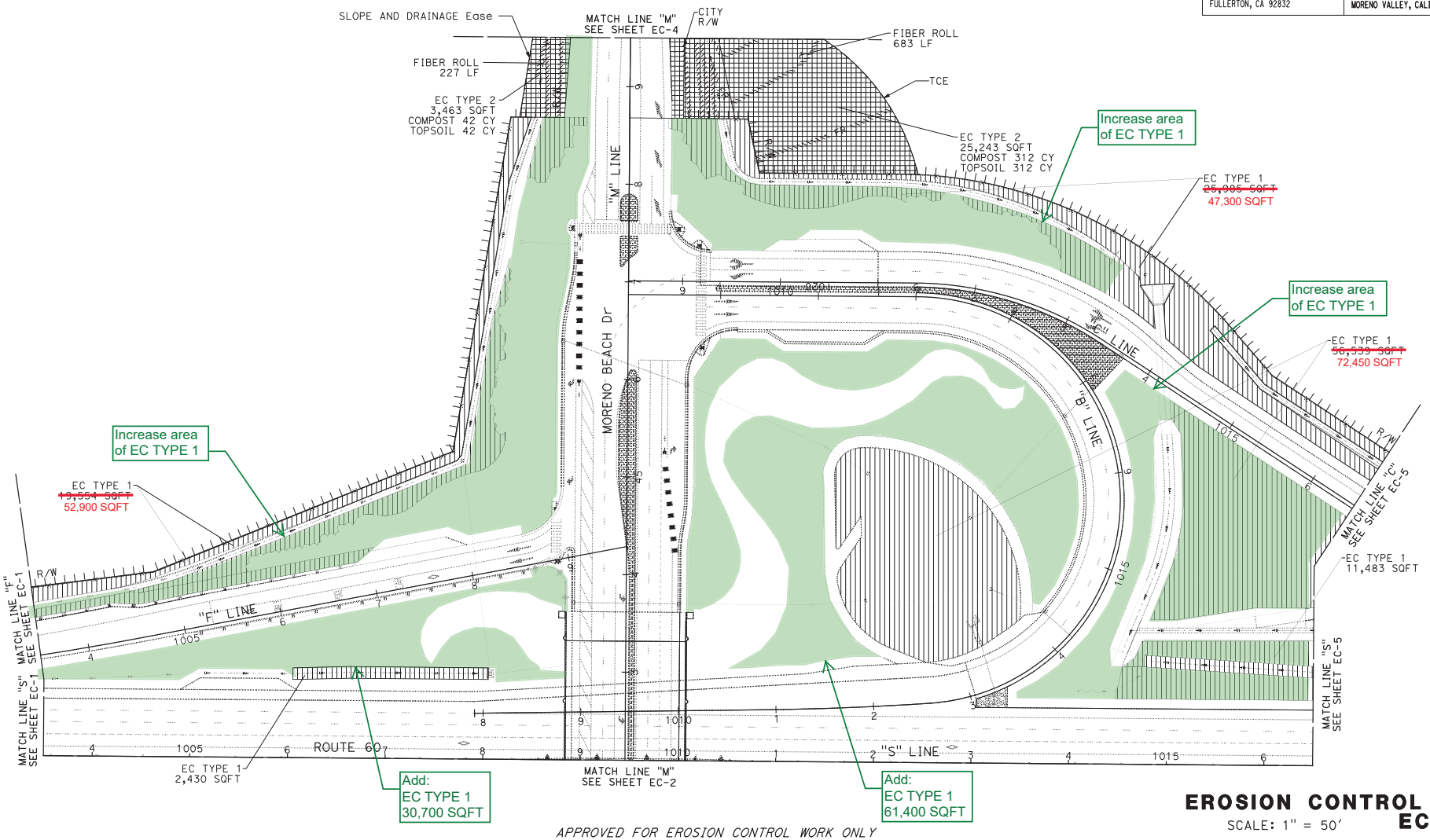

APPROVED FOR EROSION CONTROL WORK ONLY

EROSION CONTROL EC-3

SCALE: 1" = 50'

STATE OF CALIFORNIA - DEPARTMENT OF TRANSPORTATION

Caltrans DESIGN BRANCH H

CONSULTANT SENIOR LANDSCAPE ARCHITECT: ERIC FREEMAN

CALCULATED-DESIGNED BY: ERIK ADELMAN

CHECKED BY: ERIC FREEMAN

REVISED BY

DATE REVISED

LAST REVISION 00-00-00

DATE PLOTTED => 03-AUG-2020
TIME PLOTTED => 13:53

BORDER LAST REVISED 7/2/2010

USERNAME => p003256D
DGN FILE => 0812000059te003.dgn

RELATIVE BORDER SCALE IS IN INCHES 0 1 2 3

UNIT 2232

PROJECT NUMBER & PHASE 08120000591

NOTE:

FOR ACCURATE RIGHT OF WAY DATA, CONTACT
RIGHT OF WAY ENGINEERING AT THE DISTRICT OFFICE.

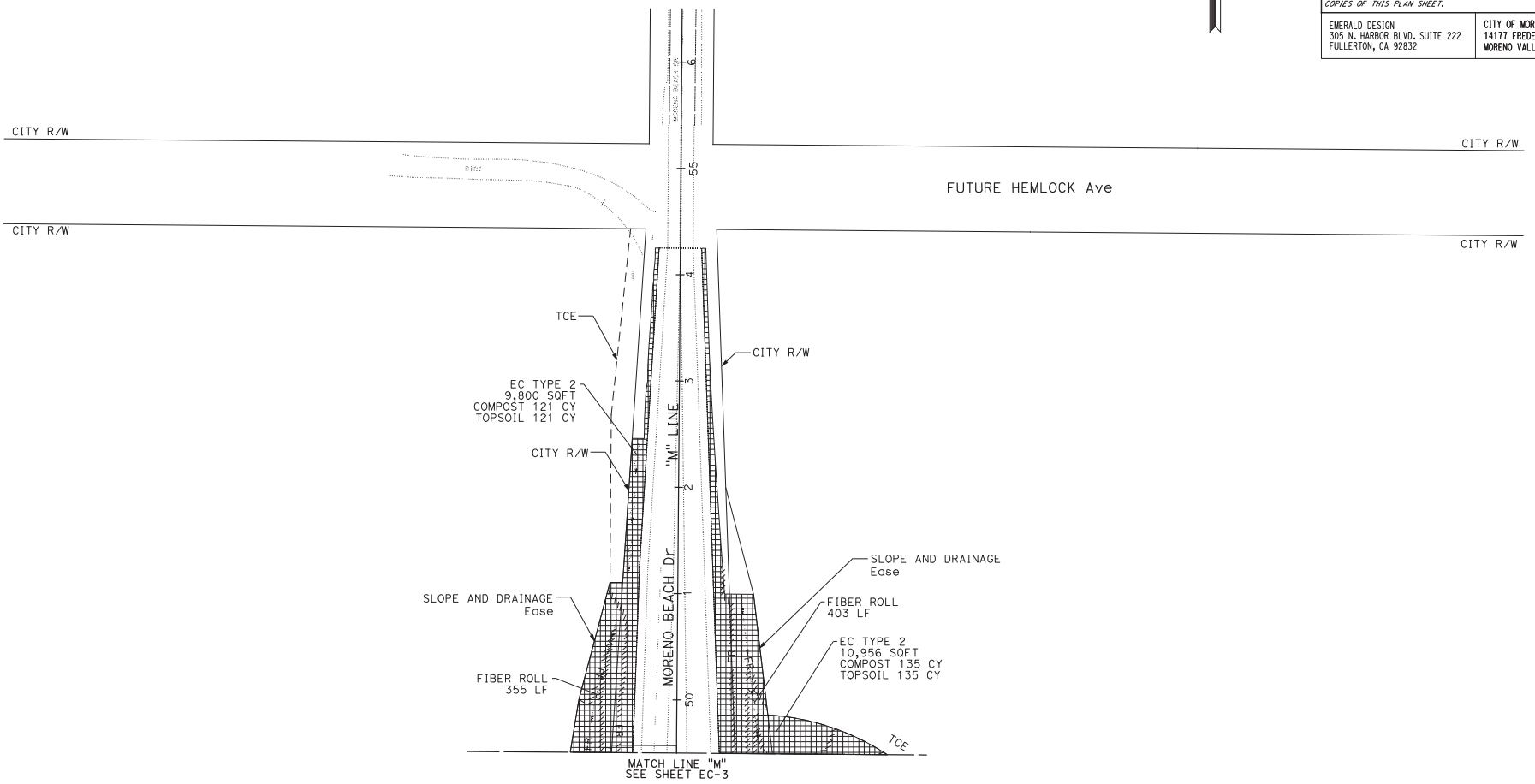

Dist	COUNTY	ROUTE	POST MILES TOTAL PROJECT	SHEET No.	TOTAL SHEETS
08	Riv	60	18.8/19.6	254	358

LICENSED LANDSCAPE ARCHITECT

PLANS APPROVAL DATE

THE STATE OF CALIFORNIA OR ITS OFFICERS OR AGENTS SHALL NOT BE RESPONSIBLE FOR THE ACCURACY OR COMPLETENESS OF SCANNED COPIES OF THIS PLAN SHEET.

LICENSED LANDSCAPE ARCHITECT — ERIC FREEMAN — Signature — 12/31/08 Renewal Date — 5/27/20 Date — STATE OF CALIFORNIA

EMERALD DESIGN
305 N. HARBOR BLVD. SUITE 222
FULLERTON, CA 92832

CITY OF MORENO VALLEY
14177 FREDERICK STREET
MORENO VALLEY, CALIFORNIA 92552

REVISED BY	DATE REVISED
ERIK ADELMAN	ERIC FREEMAN

CALCULATED-DESIGNED BY	CHECKED BY

CONSULTANT SENIOR LANDSCAPE ARCHITECT
ERIC FREEMAN

STATE OF CALIFORNIA - DEPARTMENT OF TRANSPORTATION
Caltrans
DESIGN BRANCH H

APPROVED FOR EROSION CONTROL WORK ONLY

EROSION CONTROL

SCALE: 1" = 50'

EC-4

LAST REVISION 00-00-00
DATE PLOTTED => 03-AUG-2020
TIME PLOTTED => 13:54

BORDER LAST REVISED 7/2/2010

USERNAME => p003256D
DGN FILE => 0812000059te004.dgn

RELATIVE BORDER SCALE IS IN INCHES 0 1 2 3

UNIT 2232

PROJECT NUMBER & PHASE 08120000591

NOTE:

FOR ACCURATE RIGHT OF WAY DATA, CONTACT RIGHT OF WAY ENGINEERING AT THE DISTRICT OFFICE.

Dist	COUNTY	ROUTE	POST MILES TOTAL PROJECT	SHEET No.	TOTAL SHEETS
08	Riv	60	18.8/19.6	255	358

LICENSED LANDSCAPE ARCHITECT

PLANS APPROVAL DATE

THE STATE OF CALIFORNIA OR ITS OFFICERS OR AGENTS SHALL NOT BE RESPONSIBLE FOR THE ACCURACY OR COMPLETENESS OF SCANNED COPIES OF THIS PLAN SHEET.

LICENSED LANDSCAPE ARCHITECT ERIC FREEMAN #6265 Signature 12/31/22 Renewal Date 5/27/20 Date STATE OF CALIFORNIA

EMERALD DESIGN
305 N. HARBOR BLVD. SUITE 222
FULLERTON, CA 92832

CITY OF MORENO VALLEY
14177 FREDERICK STREET
MORENO VALLEY, CALIFORNIA 92552

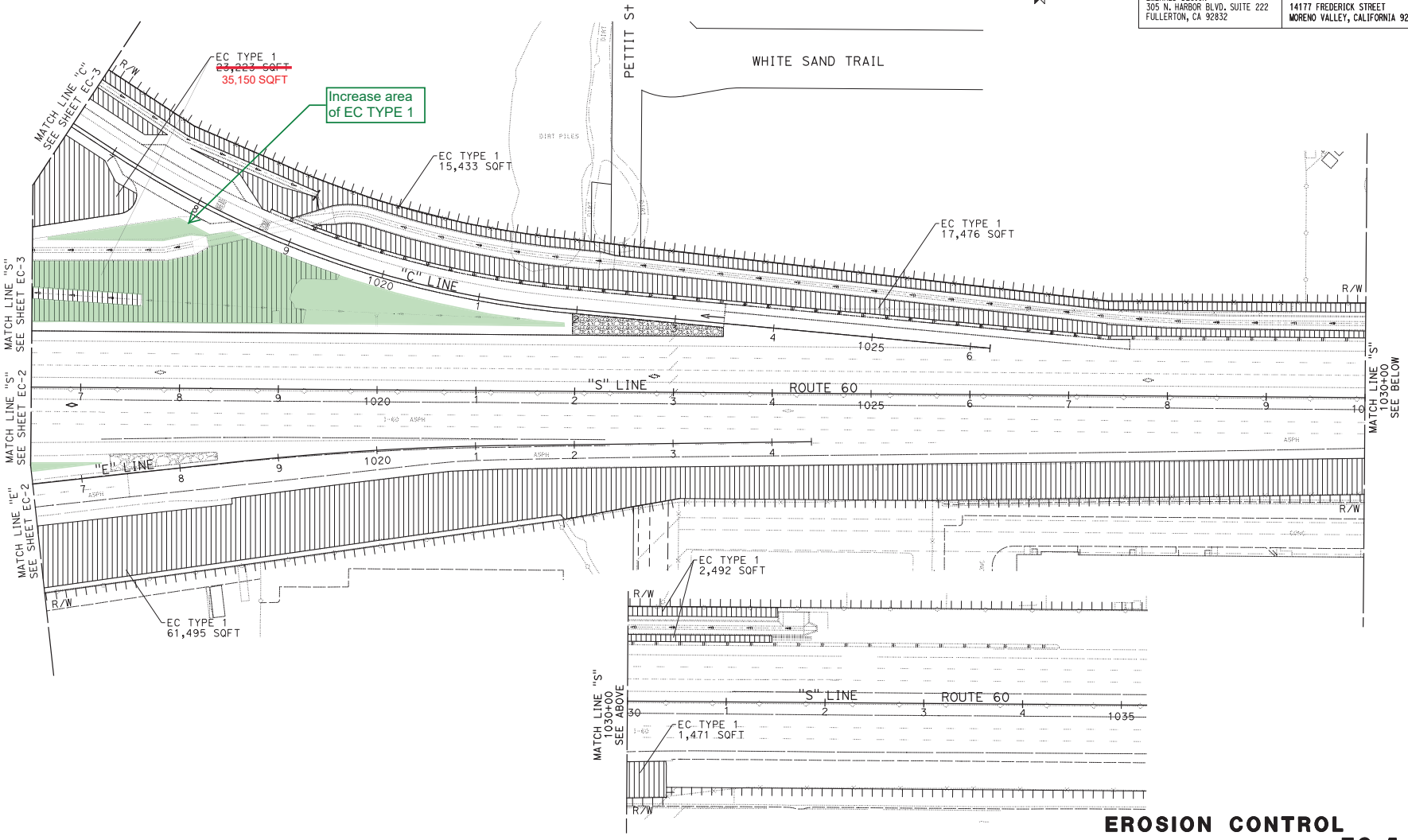

EROSION CONTROL

SCALE: 1" = 50'

EC-5

APPROVED FOR EROSION CONTROL WORK ONLY

STATE OF CALIFORNIA - DEPARTMENT OF TRANSPORTATION

Caltrans

DESIGN BRANCH H

CONSULTANT SENIOR LANDSCAPE ARCHITECT: ERIC FREEMAN

CALCULATED-DESIGNED BY: ERIK ADELMAN

CHECKED BY: ERIC FREEMAN

REVISED BY

DATE REVISED

LAST REVISION 00-00-00

DATE PLOTTED => 03-AUG-2020
TIME PLOTTED => 13:54

BORDER LAST REVISED 7/2/2010

USERNAME => p003256D
DGN FILE => 0812000059te005.dgn

RELATIVE BORDER SCALE IS IN INCHES 0 1 2 3

UNIT 2232

PROJECT NUMBER & PHASE 08120000591

Dist	COUNTY	ROUTE	POST MILES TOTAL PROJECT	SHEET No.	TOTAL SHEETS
08	Riv	60	18.8/19.6	256	358

LICENSED LANDSCAPE ARCHITECT

PLANS APPROVAL DATE

THE STATE OF CALIFORNIA OR ITS OFFICERS OR AGENTS SHALL NOT BE RESPONSIBLE FOR THE ACCURACY OR COMPLETENESS OF SCANNED COPIES OF THIS PLAN SHEET.

LICENSED LANDSCAPE ARCHITECT — ERIC FREEMAN — Signature — Renewal Date 8/31/09 — Date — STATE OF CALIFORNIA

EMERALD DESIGN
305 N. HARBOR BLVD. SUITE 222
FULLERTON, CA 92832

CITY OF MORENO VALLEY
14177 FREDERICK STREET
MORENO VALLEY, CALIFORNIA 92552

EROSION CONTROL QUANTITIES

SHEET NUMBER	DESCRIPTION	COMPOST CY	IMPORTED TOPSOIL CY	INCORPORATE MATERIALS SQFT	HYDROSEED SQFT	HYDROMULCH SQFT	FIBER ROLLS LF
EC-1	EC TYPE 1				23,306	23,306	
EC-2	EC TYPE 1				40,766	40,766	
EC-3	EC TYPE 1				115,991	115,991	
	EC TYPE 2	354	354	28,706	28,706	28,706	
	FIBER ROLLS						910
EC-4	EC TYPE 2	256	256	20,756	20,756	20,756	
	FIBER ROLLS						758
EC-5	EC TYPE 1				121,590	121,590	
TOTAL		610	610	49,462	351,115	351,115	1,668

28,456	28,456
173,500	173,500
278,663	278,663
28,706	28,706
20,756	20,756
133,517	133,517
663,598	663,598

EROSION CONTROL QUANTITIES ECQ-1

NO SCALE

STATE OF CALIFORNIA - DEPARTMENT OF TRANSPORTATION
DESIGN BRANCH H
CONSULTANT SENIOR LANDSCAPE ARCHITECT — ERIC FREEMAN
CALCULATED-DESIGNED BY — ERIK ADELMAN
CHECKED BY — ERIC FREEMAN
REVISED BY
DATE REVISED

LAST REVISION 00-00-00
DATE PLOTTED => &DATE
TIME PLOTTED => &TIME

BORDER LAST REVISED 7/2/2010
USERNAME => &USER
DGN FILE => &REQUEST
RELATIVE BORDER SCALE IS IN INCHES 0 1 2 3
UNIT 2232
PROJECT NUMBER & PHASE 08120000591

APPENDIX B

COMMUNITY WORKFORCE AGREEMENT

COMMUNITY WORKFORCE AGREEMENT

BY AND BETWEEN

CITY OF MORENO VALLEY

AND

SAN BERNARDINO/RIVERSIDE COUNTIES BUILDING

AND CONSTRUCTION TRADES COUNCIL, AFL-CIO

AND THE SIGNATORY CRAFT COUNCILS AND UNIONS

TABLE OF CONTENTS

		Page
ARTICLE 1	DEFINITIONS	3
ARTICLE 2	SCOPE OF THE AGREEMENT	5
ARTICLE 3	UNION RECOGNITION AND EMPLOYMENT	9
ARTICLE 4	UNION ACCESS AND STEWARDS	13
ARTICLE 5	WAGES AND BENEFITS	14
ARTICLE 6	HOURS OF WORK, OVERTIME, SHIFTS AND HOLIDAYS	15
ARTICLE 7	WORK STOPPAGES AND LOCKOUTS	17
ARTICLE 8	WORK ASSIGNMENTS AND JURISDICTIONAL DISPUTES	21
ARTICLE 9	MANAGEMENT RIGHTS	21
ARTICLE 10	SETTLEMENT OF GRIEVANCES AND DISPUTES	24
ARTICLE 11	REGULATORY COMPLIANCE	26
ARTICLE 12	SAFETY AND PROTECTION OF PERSON AND PROPERTY	26
ARTICLE 13	TRAVEL AND SUBSISTENCE	27
ARTICLE 14	APPRENTICES	27
ARTICLE 15	WORKING CONDITIONS	29
ARTICLE 16	PRE-JOB CONFERENCES	29
ARTICLE 17	LABOR/MANAGEMENT COOPERATION	30
ARTICLE 18	SAVINGS AND SEPARABILITY	30
ARTICLE 19	WAIVER	31
ARTICLE 20	INDEMNITY	31
ARTICLE 21	AMENDMENTS	31
ARTICLE 22	DURATION OF THE AGREEMENT	32
ATTACHMENT A	LETTER OF ASSENT	35
ATTACHMENT B	ZIP CODES	36
ATTACHMENT C	CRAFT REQUEST FORM	38
ATTACHMENT D	LIST OF NEUTRAL ARBITRATORS	40

CITY OF MORENO VALLEY
COMMUNITY WORKFORCE AGREEMENT

This Community Workforce Agreement ("Agreement" or CWA") is entered into effective as of the date the last signature of a Party is placed on the Agreement , by and between the City of Moreno Valley, a municipal corporation ("City"), the San Bernardino/Riverside Counties Building and Construction Trades Council ("Trades Council"), and the signatory Craft Councils and Local Unions signing this Agreement (collectively, the "Union" or "Unions"). This Agreement establishes the labor relations policies and procedures for the Contractors awarded contracts for Project Work and for the crafts persons employed by the Contractors and represented by the Unions engaged in the Project Work as more fully described below. The City, Trades Council and Unions are hereinafter referred to herein, as the context may require, as "Party" or "Parties."

It is understood by the Parties to this Agreement that for the duration of this Agreement, it shall be the policy of the City, to the extent permitted by law, for all Project Work (as defined in Sections 1.9 and 2.2.) to be contracted exclusively to Contractors who agree to execute and be bound by the terms of this Agreement, through the Letter of Assent (a form of which is attached as **"Attachment A"**), and to require each of its subcontractors, of whatever tier, to become so bound. The City shall include, directly or by incorporation by reference, the requirements of this Agreement in the advertisement of and/or specifications for each and every contract for Project Work to be awarded by the City.

It is further understood that the City shall retain a third party to administer and enforce the obligations of this Agreement and to the extent permitted by law to ensure that the benefits envisioned from it flow to all Parties, the Contractors and crafts persons working under it, and the residents of the City. The City shall designate that third party independent contractor as a "CWA Administrator," to serve as the City's liaison for Contractors and other persons; monitor compliance with this Agreement; assist, as the authorized representative of the City, in developing and implementing the programs referenced herein, all of which are critical to fulfilling the intent and purposes of the Parties and this Agreement; and to otherwise implement and administer this Agreement.

ARTICLE 1
DEFINITIONS

Section 1.1 "Agreement" or "CWA" means this Community Workforce Agreement.

Section 1.2 "Apprentice" means those employees indentured and participating in a Joint Labor/Management Apprenticeship Program approved by the State of California, Department of Industrial Relations, and Division of Apprenticeship Standards.

Section 1.3 "Construction Contract", "Contract" or "Construction Contracts" means any contract entered into by the City, for the construction of Project Work as specified in Section 2.2.

Section 1.4 "Contractor" means any individual firm, partnership or corporation, or

combination thereof, including joint ventures, which is an independent business enterprise and which has entered into a Construction Contract with the City or any of its contractors or any of the City's or contractor's subcontractors of any tier, with respect to the construction of any part of a Project under contract terms and conditions approved by the City and which incorporate this Agreement.

Section 1.5 "City" means the City of Moreno Valley.

Section 1.6 "Joint Labor/Management Apprenticeship Program" means a joint Union and Contractor administered apprenticeship program certified by the State of California, Department of Industrial Relations, Division of Apprenticeship Standards.

Section 1.7 "Letter of Assent" means the document that each Contractor (of any tier) must sign and submit to the City before beginning any Project Work (in the form attached hereto as **"Attachment A."**), which formally binds such Contractor(s) to adherence to all the forms, requirements and conditions of this Agreement.

Section 1.8 "CWA Administrator" means the Third-Party Administrator, retained by the City who will be the liaison between the City, Contractors, and the Unions. His/ Her duties and authority include: responding to inquiries about the CWA; monitoring compliance with the CWA by Contractor and the Trades, developing and implementing programs set forth in the CWA including but not limited to grievance procedures.

Section 1.9 "Project", "Project Work" or "City Project" means the demolition and construction work to be performed on City property or within easements secured by the City consisting of the construction of Public Works, pursuant to a Construction Contract entered into by the City with a minimum amount of $1,000,000. Excluded from the definition and the scope of this CWA are projects that are below $1,000,000 and any landscaping or tree maintenance contracts in any amount.

Section 1.10 "Specialty Contracts" means a contract for Project Work with a specialty contractor which is either limited to a particular single trade or craft or limited to a singular scope of work.

Section 1.11 "Master Labor Agreements" means the local collective bargaining agreements of the signatory Unions having jurisdiction over the Project Work.

Section 1.12 "Subscription Agreement" means the contract between a Contractor and a Union's Labor/Management Trust Fund(s) that allows the Contractor to make the appropriate fringe benefit contributions in accordance with the terms of the Master Labor Agreements.

Section 1.13 The use of masculine or feminine gender or titles in this Agreement should be construed as including both genders and not as gender limitations unless the Agreement clearly requires a different construction. Further, the use of Article titles and/or Section headings are for information only and carry no legal significance.

ARTICLE 2
SCOPE OF THE AGREEMENT

Section 2.1 General This Agreement shall apply to all of the City's Project Work, as defined in Section 1.9, performed by those Contractor(s) of whatever tier that have Contracts awarded for such work, for the development of the City's facilities which, jointly, constitute the Project Work, and have been designated by the City for construction or rehabilitation.

Section 2.2 Specific Project Work covered by this Agreement is defined and limited to:

2.2.1 All construction and major rehabilitation work pursuant to "prime multi-trade construction contracts" as well as all prime "Specialty Contracts" that exceed one million dollars ($1,000,000.) and all subcontracts flowing from these contracts; and

2.2.2 The definition of Project Work can be amended by mutual agreement of all Parties memorialized in an Amendment to this Agreement executed by all signatories.

2.2.3 This Agreement is not intended to and shall not apply to any work performed at any time prior to the effective date, or after the expiration or termination of this Agreement, except as otherwise provided herein. This Agreement shall also not apply to any Project that has been approved for bidding by the City Engineer prior to the effective date of the Agreement. This Agreement shall in no way limit the City's right to terminate, modify or rescind any construction contract and/or any related subcontract or agreement. Should the City remove or terminate any contract or agreement for construction that did not at the time it was awarded fall within the scope of this Agreement and thereafter authorizes that work be commenced on any contract for such construction that subsequently falls within the definition of Project Work, the contract for construction shall be performed under the terms of this Agreement.

Section 2.3 Bundling of Contracts

2.3.1 The City, in its sole discretion, may, but is not required to group (or "bundle") for bidding, contracts not meeting the threshold of Section 2.2 above. (Small contracts for like types of work, scheduled to be undertaken at the same facility or on the same project site, and within the same timeframe, may be considered for such bundling, consistent with economies of scale, and the purposes of this Agreement); and

2.3.2 Project Work will not be intentionally split, divided or otherwise separated for contract award purposes to avoid application of this Agreement.

Section 2.4 Non-Applicability This Agreement shall not apply to any work of any Contractor other than that on Project Work specifically covered by this Agreement.

Section 2.5 Exclusions In addition to items listed in Section 2.2.3 above, items specifically excluded from this Agreement include the following:

2.51 Work of non-manual employees, including but not limited to: superintendents;

teachers; supervisors (except those covered by Master Labor Agreements above the level of general foreman); construction managers, staff engineers; time keepers; mail carriers; clerks; office workers; messengers; guards; safety personnel; emergency medical and first aid technicians; and other professional, engineering, executive, administrative, supervisory and management employees;

2.5.2 Purchase and Maintenance of equipment and machinery owned or controlled and operated by the City;

2.5.3 All off-site manufacture and handling of materials, equipment or machinery; provided, however, that lay down or storage areas for equipment or material and manufacturing (prefabrication) sites, dedicated solely to the Project, and the movement of materials or goods between such locations and a Project site are within the scope of this Agreement;

2.5.4 All work performed by City employees, the CWA Administrator, design teams (including, but not limited to architects engineers and master planners), or any other consultants working for the City and their sub-consultants, and other employees of professional service organizations, not performing manual labor within the scope of this Agreement; provided, however, that it is understood and agreed that Building/Construction Inspector and Field Soils and Materials Testers (Inspectors) working on a Project Work are a covered craft under the Agreement. This inclusion applies to the scope of work defined in the State of California Wage Determination for said Craft. This shall also specifically include such work where it is referred to by utilization of such terms as "quality control" or "quality assurance." Every Inspector performing under the wage classification of Building/Construction Inspector and Field Soils and Material Testers under a professional services agreement or a construction contract shall be bound to all applicable requirements of the CWA.

2.5.5 Any work performed near, or leading to a site of work covered by this Agreement and undertaken by state, county or other governmental bodies, or their Contractors; or by public utilities, or their Contractors; and/or by adjacent third party landowners; and/or by the City or its Contractors (for work which is not within the scope of this Agreement);

2.5.6 Off-site maintenance of leased equipment and on-site supervision of such work;

2.5.7 Work by employees of a manufacturer or vendor supervising the work of Craft employees under this Agreement, necessary to maintain such manufacturers or vendor's warranties or guaranty;

2.5.8 Non-construction support services contracted by the City, City consultants, the CWA Administrator, or Contractor in connection with a Project;

2.5.9 Laboratory work for testing connected with work done under this Agreement.

2.5.10 This Agreement shall not apply if the City receives funding or assistance from any

Federal, State, local or other public entity for the Public Work Project/Construction Contract, if a requirement, condition or other term of receiving that funding or assistance, at the time of the awarding of the funding, is that the City not require bidders, contractors, or other persons or entities to enter into an agreement with one or more labor organizations. The City agrees that it will make reasonable efforts to advice any governmental agency or granting authority of this Agreement. This Agreement shall also not apply to any Public Works Project/Construction Contract funded fully or in part by regional development impact fees or other similar fees (i.e. TUMF), if availability or receipt of such funding precludes any work from being performed under a PLA, CWA, or other similar labor agreements.

Section 2.6 Awarding of Contracts for Project Work

2.6.1 The City and/or the Contractors, as appropriate, have the absolute right to award contracts or subcontracts on Project Work to any Contractor notwithstanding the existence or non-existence of any agreements between such Contractor and any Union parties, provided only that such Contractor is ready, willing, and able to execute a Letter of Assent and comply with this Agreement should such Contractor be awarded work covered by this Agreement.

2.6.2 It is agreed that all Contractors of whatever tier, who have been awarded Project Work contracts, shall be required to accept and be bound to the terms and conditions of this Agreement, and shall evidence their acceptance by the execution of the Letter of Assent set forth in **"Attachment A"** hereto, prior to the commencement of any Project Work. At the time that any Contractor enters into a subcontract with any subcontractor of any tier providing for the performance of the construction contract, the Contractor shall provide a copy of this Agreement to said subcontractor and shall require the subcontractor, as a part of accepting the award of a construction subcontract, to agree in writing in the form of a Letter of Assent to be bound by each and every provision of this Agreement prior to the commencement of work on the Project. No Contractor or subcontractor shall commence Project Work without having first provided a copy of the Letter of Assent as executed by it to the CWA Administrator and to the Trades Council.

2.6.3 Nothing in this Agreement shall in any way affect, the City's right to retain the absolute right to select the lowest responsive and responsible bidder for the award of contracts on all projects, as provided for under State Law.

Section 2.7 Master Labor Agreements

2.7.1 The provisions of this Agreement, including the Master Labor Agreements as such may be changed from time-to-time and which also are incorporated herein by reference, shall apply to Project Work. This Agreement is not intended to supersede such Master Labor Agreements between any of the Employers performing construction work on the Project and a Union signatory thereto except to the extent the provisions of this Agreement are inconsistent with such Master Labor Agreements, in which event the provisions of this Agreement shall apply. However, such does not apply to work performed under the National Cooling Tower Agreement, the National Stack Agreement, the National Transit Division Agreement (NTD), work within the jurisdiction

of the International Union of Elevator Constructors, and all instrument calibration and loop checking work performed under the terms of the UA/IBEW Joint National Agreement for Instrument and Control Systems Technicians except that Article 9 dealing with Strikes, Work Stoppages and Lock-Outs, Work Assignments and Jurisdictional Disputes, and Settlement of Grievances and Disputes shall apply to such work. Where a subject is covered by the provisions of a Master Labor Agreement and not in conflict with the provisions of this Agreement, the provisions of the Master Labor Agreement shall apply. It is specifically agreed that no later agreement shall be deemed to have precedence over this Agreement unless signed by all parties signatory hereto who are then currently employed or represented at the Project. Any dispute as to the applicable source between this Agreement and any Master Labor Agreements for determining the wages, hours of working conditions of employees on this Project shall be resolved under the procedures established in Article 10.

2.7.2 It is understood that this Agreement, together with the referenced Master Labor Agreements, constitutes a self-contained, stand-alone agreement and by virtue of having become bound to this Agreement, the Contractor will not be obligated to sign any other local, area or national collective bargaining agreement as a condition of performing work within the scope of this Agreement (provided, however, that the Contractor may be required to sign a uniformly applied, non-discriminatory Subscription Agreement at the request of the trustees or administrator of a trust fund established pursuant to Section 302 of the Labor Management Relations Act, and to which such Contractor is bound to make contributions under this Agreement, provided that such Subscription Agreement does not purport to bind the Contractor beyond the terms and conditions of this Agreement and/or expand its obligation to make contributions pursuant thereto). It shall be the responsibility of the prime Contractor to have each of its subcontractors sign the appropriate Subscription Agreement, with the appropriate Craft Union prior to the subcontractor beginning work on Project Work.

Section 2.8 Binding Signatories Only This Agreement shall only be binding on the signatory Parties hereto, and shall not apply to the parents, affiliates, subsidiaries, or other ventures of any such Party not performing Project Work.

Section 2.9 Other City Work Nothing contained herein shall be interpreted to prohibit, restrict, or interfere with the performance of any other operation, work or function not covered by this Agreement, which may be performed by City employees or contracted for by the City for its own account, on its property, or in and around a Project site.

Section 2.10 Separate Liability It is understood that the liability of the Contractor(s) and the liability of the separate Unions under this Agreement shall be several and not joint. The Unions agree that this Agreement does not have the effect of creating any joint employment status between or among the City or CWA Administrator and/or any Contractor.

Section 2.11 Completed Project Work As areas of Project Work are accepted by the City, this Agreement shall have no further force or effect on such items or areas except where the Contractor is directed by the City or its representatives to engage in repairs, modification, check-out and/or warranties functions required by its contract(s) with the City under the original contract.

ARTICLE 3
UNION RECOGNITION AND EMPLOYMENT

Section 3.1 Recognition The Contractor recognizes the Trades Council and the Unions as the sole and exclusive bargaining representative for the employees engaged in Project Work. Contractors further recognize that the Unions shall be the primary source of all craft labor employed on the Projects. In the event that a Contractor has its own core workforce, said Contractor shall follow the procedures outlined below.

Section 3.2 Contractor Selection of Employees The Contractor shall have the right to determine the competency of all employees, the number of employees required, the duties of such employees within their craft jurisdiction, and shall have the sole responsibility for selecting employees to be laid off, consistent with Section 3.3 and Section 4.3, below. The Contractor shall also have the right to reject any applicant referred by a Union for any reason, subject to any reporting pay required by Section 6.6; provided, however, that such right is exercised in good faith and not for the purpose of avoiding the Contractor's commitment to employ qualified workers through the procedures endorsed in this Agreement.

Section 3.3 Referral Procedures

3.3.1 For signatory Unions having a job referral system contained in a Master Labor Agreement, the Contractor agrees to comply with such system, and it shall be used exclusively by the Contractor, except as modified by this Agreement. Such job referral system will be operated in a nondiscriminatory manner and in full compliance with federal, state, and local laws and regulations which require equal employment opportunities and non- discrimination. All of the foregoing hiring procedures, including related practices affecting apprenticeship, shall be operated so as to consider the goals of the City to encourage employment of City residents and utilization of small local businesses on the Project, and to facilitate the ability of all Contractors to meet their employment needs.

3.3.2 The local Unions will exert their best efforts to recruit and refer sufficient numbers of skilled craft workers to fulfill the labor requirements of the Contractor, including specific employment obligations to which the Contractor may be legally and/or contractually obligated; and to refer apprentices as requested to develop a larger, skilled workforce. The Unions will work with their affiliated regional and national unions, to identify and refer competent craft persons as needed for Project Work, and to identify and hire individuals, particularly residents of the City, for entrance into joint labor/management apprenticeship programs, or to participate in other identified programs and procedures to assist individuals in qualifying and becoming eligible for such apprenticeship programs, all maintained to increase the available supply of skilled craft personnel for Project Work and future construction work to be undertaken by the City that would be covered under this Agreement.

3.3.3 The Union shall not knowingly refer an employee currently employed by a Contractor on a covered Project to any other Contractor.

Section 3.4 Non-Discrimination in Referral, Employment, and Contracting The Unions and Contractors agree that they will not discriminate against any employee or applicant for employment in hiring and dispatching on the basis of race, color, religion, sex, gender, national origin, age, membership in a labor organization, sexual orientation, political affiliation, marital status or disability. Further, it is recognized that the City has certain policies, programs, and goals for the utilization of local small business enterprises. The Parties shall jointly endeavor to assure that these commitments are fully met. The Parties further agree to meet and confer within six (6) months of first Project Work being initiated under this Agreement and if at that time any provisions of this Agreement appears to interfere with local small business enterprises successfully bidding for work within the scope of this Agreement, such provision shall be carefully reviewed, and adjustments made as may be appropriate and agreed upon among the Parties, to ensure full compliance with the spirit and letter of the City's policies and commitment to its goals for the significant utilization of local small businesses as direct Contractors or suppliers for Project Work.

Section 3.5 Employment of City Residents

3.5.1 The Unions and Contractors agree that, to the extent allowed by law, and as long as they possess the requisite skills and qualifications, the Unions will exert their best efforts to refer and/or recruit sufficient numbers of skilled craft "Local Residents" as defined herein, as well as Veterans, to fulfill the requirements of the Employers. In recognition of the fact that the City and the communities surrounding Project Work will be impacted by the construction of the Project Work, the parties agree to support the hiring of workers from the residents of these surrounding areas, as well as Veterans, for Project Work. Towards that end, the Unions shall exert their best efforts to encourage and provide referrals and utilization of qualified workers residing in those U. S. Postal Service zip codes which overlap all of the City of Moreno Valley, as set forth in **"Attachment B"** attached hereto, as well as Veterans, regardless of where they reside. If the Unions cannot provide the Contractors a sufficient number of Veterans and City Residents from within the first-tier zip codes, the Unions shall exert their best efforts to then recruit and identify for referral residents of Riverside County.

3.5.2 A goal of this Agreement is that 30% of the total work hours performed on Project Work shall be performed from workers residing within the areas described in Section 3.5.1, as well as Veterans, regardless of where they reside.

3.5.3 The Unions agree to support the operation of pre-apprentice referral programs in the City. Further, the Unions agree to place on their referral roles or in their apprentice training programs, as appropriate and needed, qualified persons sent to them by designated City organizations or other organizations working with the City to increase construction industry work opportunities for City residents.

3.5.4 The Parties to this CBA support the development of increased numbers of skilled Construction Workers from among residents of Moreno Valley. Towards that end, the Parties agree to cooperatively seek to establish work opportunities for local residents and address Training and Employment needs in the Community. The goal is for the Career placement of disadvantaged and

at-risk youth, Low Income and Under/unemployed residents, Women, Minorities, and Veterans.

The Unions commit to:

(a) Coordinate and participate in City based Career and Apprenticeship Fairs and Events.

(b) Provide Industry Speakers for City Programs and Outreach Events

(c) Support Local Events and Programs designed to recruit and develop adequate numbers of competent workers in the Construction Industry

(d) Work cooperatively with the City and Community groups to provide pre-apprenticeship training utilizing Building Trades and Union Apprenticeship readiness Programs.

Section 3.6 Requirements on Contractors To facilitate the dispatch of Local Residents and Veterans, all Contractors will be required to utilize the Craft Employee Request Form whenever they are requesting the referral of any employee from a Union referral list for any Covered Project, a sample of which is attached as **"Attachment C."** When Local Residents and Veterans are requested by the Employers, the Unions will refer such workers regardless of their place in the Unions' hiring halls' list and normal referral procedures.

Section 3.7 Helmets to Hardhats

3.7.1 The Contractors and the Unions recognize a desire to facilitate the entry into the building and construction trades of Veterans who are interested in careers in the building and construction industry. The Contractors and Unions agree to utilize the services of non-profit Veterans support organizations, including but not limited to, the Center for Military Recruitment, Assessment and Veterans Employment (hereinafter "Center") and the Center's "Helmets to Hardhats" program to serve as a resource for preliminary orientation, assessment of construction aptitude, referral to apprenticeship programs or hiring halls, counseling and mentoring, support network, employment opportunities and other needs as identified by the Parties. For purposes of this Agreement the term "Eligible Veteran" shall have the same meaning as the term "veteran" as defined under Title 5, Section 2108(1) of the United States Code as the same may be amended or re-codified from time to time. It shall be the responsibility of each qualified applicant to provide the Unions with proof of his/her status as an Eligible Veteran.

3.7.2 The Unions and Contractors agree to coordinate with non-profit Veteran organizations, including, the Center to create and maintain an integrated database of veterans interested in working on Project Work and of apprenticeship and employment opportunities for working on Project Work. To the extent permitted by law, the Unions will give credit to such Veterans for bona fide, provable past experience.

Section 3.8 Core Employees

3.8.1 Contractors not currently signatory to a Master Labor Agreement may employ, as needed, first, a member of his core workforce, then an employee through a referral from the appropriate Union hiring hall, then a second core employee, then a second employee through the

referral system, and so on until a maximum of five (5) core employees are employed, thereafter, all additional employees in the affected trade or craft shall be requisitioned from the craft hiring hall in accordance with Section 3.3. In the laying off of employees, the number of core employees shall not exceed one-half plus one of the workforce for an employer with 10 or fewer employees, assuming the remaining employees are qualified to undertake the work available. As part of this process, and in order to facilitate the contract administration procedures, as well as appropriate fringe benefit fund coverage, all Contractors shall require their core employees and any other persons employed other than through the referral process, to register with the appropriate Union hiring hall, if any, prior to their first day of employment at a project site.

3.8.2 The core work force is comprised of those employees whose names appeared on the Contractor's active payroll for sixty (60) of the one hundred (100) working days immediately before award of Project Work to the Contractor; who possess any license required by state or federal law for the Project Work to be performed; who have the ability to safely perform the basic functions of the applicable trade and who have been residing within Riverside County for the one hundred (100) working days immediately prior to the award of Project Work to the Contractor.

3.8.3 Prior to each Contractor performing any work on the Project, each Contractor shall provide a list of his core employees to the CWA Administrator and the Trades Council. Failure to do so will prohibit the Contractor from using any core employees. Upon request by any Party to this Agreement, the Contractor hiring any core employee shall provide satisfactory proof (i.e., payroll records, quarterly tax records, driver's license, voter registration and postal address) evidencing the core employee's qualification as a core employee to the CWA Administrator and the Trades Council.

Section 3.9 Time for Referral If any Union's registration and referral system does not fulfill the requirements for specific classifications requested by any Contractor within forty-eight (48) hours (excluding Saturdays, Sundays and City recognized holidays), that Contractor may use employment sources other than the Union registration and referral services and may employ applicants meeting such classification from any other available source. The Contractors shall inform the Union of any applicants hired from other sources and such applicants shall register with the appropriate hiring hall, if any, before commencing work.

Section 3.10 Lack of Referral Procedure If a signatory Union does not have a job referral system as set forth in Section 3.3 above, the Contractors shall give the Union equal opportunity to refer applicants. Contractors shall notify the Union of employees hired outside the referral system, as set forth in Section 3.9.

Section 3.11 Employees are not required to become or remain union members as a condition of performing Covered Work under this Agreement. Employers shall make and transmit all deductions for union dues, fees, and assessments that have been authorized by employees in writing in accordance with the applicable Master Agreement. Nothing in this Section 3.11 is intended to supersede the requirements of applicable Master Agreements as to those Employers otherwise signatory to such Master Agreements and as to the employees of those Employers who are performing Covered Work.

Section 3.12 Individual Seniority Except as provided in Section 4.3, individual seniority shall not be recognized or applied to employees working on Project Work; provided, however, that group and/or classification seniority in a Union's Master Labor Agreement as of the effective date of this Agreement shall be recognized for purposes of layoffs.

Section 3.13 Foremen The selection and number of craft foreman and/or general foreman shall be the responsibility of the Contractor. All foremen shall take orders exclusively from the designated Contractor representatives. Craft foreman shall be designated as working foreman at the request of the Contractors.

Section 3.14 Out of State Workers In determining compliance with the targeted hiring goals of Section 3.5 above, hours of Project Work performed by residents of states other than California will be excluded from the calculation.

ARTICLE 4
UNION ACCESS AND STEWARDS

Section 4.1 Access to Project Sites Unless otherwise precluded by applicable laws, authorized representatives of the Union shall have access to Project Work, provided that they do not interfere with the work of employees and further provided that such representatives shall notify the person charged with on-site project supervision and fully comply with posted visitor, security and safety rules.

Section 4.2 Stewards

4.2.1 Each signatory Union shall have the right to dispatch a working journeyperson as a steward for each shift and shall notify the Contractor in writing of the identity of the designated steward or stewards prior to the assumption of such person's duties as steward. Such designated steward or stewards shall not exercise any supervisory functions. There will be no non-working stewards. Stewards will receive the regular rate of pay for their respective crafts.

4.2.2 In addition to his/her work as an employee, the steward shall have the right to receive, but not to solicit, complaints or grievances and to discuss and assist in the adjustment of the same with the employee's appropriate supervisor. Each steward shall be concerned only with the employees of the steward's Contractor and, if applicable, subcontractor(s), and not with the employees of any other Contractor. A Contractor will not discriminate against the steward in the proper performance of his/her Union duties.

4.2.3 When a Contractor has multiple, non-contiguous work locations at one site, the Contractor may request, and the Union shall appoint such additional working stewards as the Contractor requests to provide independent coverage of one or more such locations. In such cases, a steward may not service more than one work location without the approval of the Contractor.

4.2.4 The stewards shall not have the right to determine when overtime shall be worked

or who shall work overtime.

Section 4.3 Steward Layoff/Discharge Contractor agrees to notify the appropriate Union twenty-four (24) hours before the layoff of a steward, except in the case of disciplinary discharge for just cause. If the steward is protected against such layoff by the provisions of the applicable Master Labor Agreement, such provisions shall be recognized when the steward possesses the necessary qualifications to perform the remaining work. In any case in which the steward is discharged or disciplined for just cause, the appropriate Union will be notified immediately by the Contractor, and such discharge or discipline shall not become final (subject to any later filed grievance) until twenty-four (24) hours after such notice has been given. Contractor has the right to exclude such steward from the job site pending the finalization of the notice, or appeal.

Section 4.4 Employees on Non-Project Work Union agrees that the Union representatives, stewards, and individual workers will not interfere with the City personnel, or with personnel employed by the any other employer not a Party to this Agreement.

ARTICLE 5
WAGES AND BENEFITS

Section 5.1 Wages All employees covered by this Agreement shall be classified in accordance with work performed and paid by the Contractors the hourly wage rates for those classifications in compliance with the applicable prevailing wage rate determination established pursuant to applicable law. If a prevailing rate increases under law, the Contractor shall pay that rate as of its effective date under the law. This Agreement does not relieve Contractors directly signatory to a Master Labor Agreement with one of the Unions signing this Agreement from paying all of the wages set forth in such Agreements.

Section 5.2 Benefits

5.2.1 Contractors shall pay contributions to the established employee benefit funds in the amounts designated in the appropriate Master Labor Agreement and make all employee-authorized deductions in the amounts designated in the appropriate Master Labor Agreement; however, such contributions shall not exceed the contribution amounts set forth in the applicable prevailing wage determination. This Agreement does not relieve Contractors directly signatory to one or more of the Master Labor Agreements from making all contributions set forth in those Master Labor Agreements without reference to the foregoing.

5.2.2 The Contractor adopts and agrees to be bound by the written terms of the applicable, legally established, trust agreement(s) specifying the detailed basis on which payments are to be made into, and benefits paid out of, such trust funds for its employees. The Contractor authorizes the Parties to such trust funds to appoint trustees and successor trustees to administer the trust funds and hereby ratifies and accepts the trustees so appointed as if made by the Contractor.

5.2.3 Each Contractor and subcontractor is required to certify to the CWA

Administrator that it has paid all benefit contributions due and owing to the appropriate Trust(s) prior to the receipt of its final payment and/or retention. Further, upon timely notification by a Union to the CWA Administrator, the CWA Administrator shall work with any prime Contractor or subcontractor who is delinquent in payments to assure that proper benefit contributions are made, to the extent of requesting the City or the prime Contractor to withhold payments otherwise due such Contractor, until such contributions have been made or otherwise guaranteed.

Section 5.3 Wage Premiums Wage premiums, including but not limited to pay based on height of work, hazard pay, scaffold pay, and special skills shall not be applicable to work under this Agreement, except to the extent provided for in any applicable prevailing wage determination.

ARTICLE 6
HOURS OF WORK, OVERTIME, SHIFTS AND HOLIDAYS

Section 6.1 Hours of Work Eight (8) hours per day between the hours of 6:00 a.m. and 5:30 p.m., plus one-half (½) hour unpaid lunch approximately mid-way through the shift, shall constitute the standard workday. Forty (40) hours per week shall constitute a regular week's work. The work week will start on Sunday and conclude on Saturday. The foregoing provisions of this Article are applicable unless otherwise provided in the applicable prevailing wage determination, or unless changes are permitted by law and such are agreed upon by the Parties. Nothing herein shall be construed as guaranteeing any employee eight (8) hours per day or forty (40) hours per week, or a Monday through Friday standard work schedule.

Section 6.2 Place of Work Employees shall be at their place of work (as designated by the Contractor), at the starting time and shall remain at their place of work, performing their assigned functions, until quitting time. The place of work is defined as the gang or toolbox or equipment at the employee's assigned work location or the place where the foreman gives instructions. The Parties reaffirm their policy of a fair day's work for a fair day's wage. Except as provided in Section 6.6, there shall be no pay for time not worked unless the employee is otherwise engaged at the direction of the Contractor.

Section 6.3 Overtime Overtime shall be paid in accordance with the requirements of the applicable prevailing wage determination. There shall be no restriction on the Contractor's scheduling of overtime or the nondiscriminatory designation of employees who will work overtime. There shall be no pyramiding of overtime (payment of more than one form of overtime compensation for the same hour) under any circumstances.

Section 6.4 Shifts and Alternate Work Schedules

6.4.1 Alternate starting and quitting time and/or shift work may be performed at the option of the Contractor upon three (3) days' prior notice to the affected Union(s), unless a shorter notice period is provided for in the applicable Master Labor Agreement. If two shifts are worked, each shall consist of eight (8) hours of continuous work exclusive of a one-half (½) hour non-paid lunch period, for eight (8) hours pay. The last shift shall start on or before 6:00 p.m. The first shift starting at or after 6:00 a.m. is designated as the first shift, with the second shift following, unless

night-work is required under the Contract.

6.4.2 Contractors, the Trades Council and the Union recognize the economic impact upon the City and City residents of the Project being undertaken by the City and agree that all Parties to this Agreement desire and intend Project Work to be undertaken in a cost efficient and effective manner to the highest standard of quality and craftsmanship. Recognizing the economic conditions, the Parties agree that, except to the extent required by law, employees performing Project Work shall not be entitled to any differentials or additional pay based upon the shift or work schedule of the employees. Instead, all employees working on Project Work shall be paid at the same base rate regardless of shift or work schedule worked.

6.4.3 Because of operational necessities, the second shift may, at the City's direction, be scheduled without the preceding shift having been worked. It is recognized that the City's operations and/or mitigation obligations may require restructuring of normal work schedules. Except in an emergency or when specified in the City's bid specification, the Contractor shall give affected Union(s) at least three (3) days' notice of such schedule changes.

Section 6.5 Holidays Recognized holidays for Project Work shall be those set forth and governed by the prevailing wage determination(s) applicable to such Project Work.

Section 6.6 Show-up Pay

6.6.1 Except as otherwise required by State law, employees reporting for work and for whom no work is provided, except when given prior notification not to report to work, shall receive two (2) hours pay at the regular straight time hourly rate. Employees who are directed to start work shall receive four (4) hours of pay at the regular straight time hourly rate. Employees who work beyond four (4) hours shall be paid for actual hours worked. Whenever reporting pay is provided for employees, they will be required to remain at the Project Site and available for work for such time as they receive pay, unless released earlier by the principal supervisor of the Contractor(s) or his/her designated representative. Each employee shall furnish his/her Contractor with his/her current address and telephone number and shall promptly report any changes to the Contractor.

6.6.2 An employee called out to work outside of his/her shift shall receive a minimum of two (2) hours pay at the appropriate rate. This does not apply to time worked as an extension of (before or after) the employee's normal shift.

6.6.3 When an employee leaves the job or work location of his/her own volition or is discharged for cause or is not working as a result of the Contractor's invocation of Section 12.3, the employee shall only be paid for actual time worked.

Section 6.7 Meal Periods The Contractor will schedule a meal period of no more than one-half hour duration at the work location at approximately mid-point of the schedule shift; provided, however, that the Contractor may, for efficiency of the operation, establish a schedule which coordinates the meal periods of two or more crafts. An employee may be required to work through his meal period because of an emergency or a threat to life or property, or for such other reasons

as are in the applicable Master Labor Agreement, and if he is so required, he shall be compensated in the manner established in the applicable Master Labor Agreement.

Section 6.8 Make-up Days To the extent permitted by the applicable wage determination, when an employee has been prevented from working for reasons beyond the control of the employer, including, but not limited to inclement weather or other natural causes, during the regularly scheduled work week, a make-up day may be worked on a non-regularly scheduled work day for which an employee shall receive eight (8) hours pay at the straight time rate of pay or any premium rate required for such hours under the state prevailing wage law.

ARTICLE 7
WORK STOPPAGES AND LOCK-OUTS

Section 7.1 No Work Stoppages or Disruptive Activity The Trades Council and the Unions signatory hereto agree that neither they, and each of them, nor their respective officers or agents or representatives, shall incite or encourage, condone or participate in any strike, walk-out, slow-down, picketing, observing picket lines or other activity of any nature or kind whatsoever, for any cause or dispute whatsoever with respect to or in any way related to Project Work, or which interferes with or otherwise disrupts, Project Work, or with respect to or related to the City or Contractors, including, but not limited to, economic strikes, unfair labor practice strikes, safety strikes, sympathy strikes and jurisdictional strikes whether or not the underlying dispute is arbitrable. Any such actions by the Trades Council, or Unions, or their members, agents, representatives or the employees they represent shall constitute a violation of this Agreement. The Trades Council and the Union shall take all steps necessary to obtain compliance with this Article.

Section 7.2 Employee Violations The Contractor may discharge any employee violating Section 7.1 above and any such employee will not be eligible for rehire under this Agreement.

Section 7.3 Standing to Enforce The City, the CWA Administrator, or any Contractor affected by an alleged violation of Section 7.1 shall have standing and the right to enforce the obligations established therein.

Section 7.4 Expiration of Master Labor Agreement If the Master Labor Agreement, or any local, regional, and other applicable collective bargaining agreements expire during the term of the Project, the Union(s) agree that there shall be no work disruption of any kind as described in Section 7.1 above as a result of the expiration of any such agreement(s) having application on this Project and/or failure of the involved Parties to that agreement to reach a new contract. Terms and conditions of employment established and set at the time of bid shall remain established and set. Otherwise to the extent that such agreement does expire and the Parties to that agreement have failed to reach concurrence on a new contract, work will continue on the Project on one of the following two (2) options, both of which will be offered by the Unions involved to the Contractors affected:

7.4.1 Each of the Unions with a contract expiring must offer to continue working on the Project under interim agreements that retain all the terms of the expiring contract, except that the

Unions involved in such expiring contract may each propose wage rates and employer contribution rates to employee benefit funds under the prior contract different from what those wage rates and employer contributions rates were under the expiring contracts. The terms of the Union's interim agreement offered to Contractors will be no less favorable than the terms offered by the Union to any other employer or group of employers covering the same type of construction work in Riverside County.

7.4.2 Each of the Unions with a contract expiring must offer to continue working on the Project under all the terms of the expiring contract, including the wage rates and employer contribution rates to the employee benefit funds, if the Contractor affected by that expiring contract agrees to the following retroactive provisions: if a new Master Labor Agreement, local, regional or other applicable labor agreement for the industry having application at the Project is ratified and signed during the term of this Agreement and if such new labor agreement provides for retroactive wage increases, then each affected Contractor shall pay to its employees who performed work covered by this Agreement at the Project during the hiatus between the effective dates of such expired and new labor agreements, an amount equal to any such retroactive wage increase established by such new labor agreement, retroactive to whatever date is provided by the new labor agreement for such increase to go into effect, for each employee's hours worked on the Project during the retroactive period. All Parties agree that such affected Contractors shall be solely responsible for any retroactive payment to its employees.

7.4.3 Some Contractors may elect to continue to work on the Project under the terms of the interim agreement option offered under paragraph 7.4.1 and other Contractors may elect to continue to work on the Project under the retroactivity option offered under paragraph 7.4.2. To decide between the two options, Contractors will be given one week after the particular labor agreement has expired or one week after the Union has personally delivered to the Contractors in writing its specific offer of terms of the interim agreement pursuant to paragraph 7.4.1, whichever is the later date. If the Contractor fails to timely select one of the two options, the Contractor shall be deemed to have selected the provisions of 7.4.2.

Section 7.5 No Lockouts Contractors shall not cause, incite, encourage, condone or participate in any lock-out of employees with respect to Project Work during the term of this Agreement. The term "lock-out" refers only to a Contractor's exclusion of employees in order to secure collective bargaining advantage, and does not refer to the discharge, termination or layoff of employees by the Contractor for any reason in the exercise of rights pursuant to any provision of this Agreement, or any other agreement, nor does "lock-out" include the City's decision to stop, suspend or discontinue any Project Work or any portion thereof for any reason.

Section 7.6 Best Efforts to End Violations

7.6.1 If a Contractor contends that there is any violation of this Article or Section 8.3, it shall notify, in writing, the Executive Secretary of the Trades Council, the Senior Executive of the involved Union(s) and the CWA Administrator. The Executive Secretary and the leadership of the involved Union(s) will immediately instruct, order and use their best efforts to cause the cessation of any violation of the relevant Article.

7.6.2 If the Union contends that any Contractor has violated this Article, it will notify that the Contractor and the CWA Administrator, setting forth the facts which the Union contends violate the Agreement, at least twenty-four (24) hours prior to invoking the procedures of Section 7.8. If the CWA Administrator finds the facts presented by the Union to be compelling, he shall promptly order the involved Contractor(s) to cease any violation of the Article

Section 7.7 Withholding of services for failure to pay wages and fringe benefits

7.7.1 Notwithstanding any provision of this Agreement to the contrary, it shall not be a violation of this Agreement for any Union to withhold the services of its members (but not the right to picket) from a particular Contractor who:

(a) Fails to timely pay its weekly payroll; or

(b) Fails to make timely payments to the Union's Joint Labor/Management Trust Funds in accordance with the provisions of the applicable Master Labor Agreements. Prior to withholding its members' services for the Contractor's failure to make timely payments to the Union's Joint Labor/Management Trust Funds, the Union shall give at least ten (10) days (unless a lesser period of time is provided in the Union's Master Labor Agreement, but in no event less than forty-eight (48) hours) written notice of such failure to pay by registered or certified mail, return receipt requested, and by facsimile transmission to the involved Contractor and to the City. Union will meet within the ten (10) day period to attempt to resolve the dispute.

7.7.2 Upon the payment of the delinquent Contractor of all monies due and then owing for wages and/or fringe benefit contributions, the Union shall direct its members to return to work and the Contractor shall return all such members back to work.

Section 7.8 Expedited Enforcement Procedure

Any Party to the Agreement, and for purposes of this Article, the Contractor, or the CWA Administrator, may institute the following procedures, in lieu of or in addition to any other action at law or equity, when a breach of Section 7.1 or 7.5, above, or Section 8.3 is alleged by that Party.

7.8.1 The Party invoking this procedure shall notify the selected Arbitrator who has been selected by the negotiating Parties, and whom the Parties agree shall be the permanent arbitrators under this procedure. If the permanent arbitrators are unavailable at any time, any one of the permanent Arbitrators who is notified shall appoint his alternate to hear the matter. Arbitrator's fees shall be borne equally by the Parties involved in the arbitration, except that any participation by the City or the CWA Administrator, as observers, will not make the City, or the CWA Administrator a Party to the Arbitration, for the purposes of fee sharing provisions. The decision of the arbitrator shall be final and binding on the Parties, provided, however, that the arbitrator shall not have the authority to alter or amend or add to or delete from the provisions of this Agreement in any way. Notice to the arbitrator shall be by the most expeditious means available,

with notices to the Parties alleged to be in violation, and to the Trades Council if it is a Union alleged to be in violation. For purposes of this Article, written notice may be given by telegram, facsimile, hand delivery or overnight mail and will be deemed effective upon receipt.

7.8.2 Upon receipt of said notice, the arbitrator named above or his/her alternate shall sit and hold a hearing within twenty-four (24) hours if it is contended that the violation still exists, but not sooner than twenty-four (24) hours after notice has been dispatched to the Executive Secretary and the Senior Official(s) as required by Section 7.6, as above.

7.8.3 The arbitrator shall notify the Parties of the place and time chosen for this hearing. Said hearing shall be completed in one session, which, with appropriate recesses at the arbitrator's discretion, shall not exceed 24 hours unless otherwise agreed upon by all Parties. A failure of any Party or Parties to attend said hearings shall not delay the hearing of evidence or the issuance of any award by the arbitrator.

7.8.4 The sole issue at the hearing shall be whether or not a violation of Sections 7.1 or 7.5, above, or Section 8.3 has in fact occurred. The arbitrator shall have no authority to consider any matter in justification, explanation or mitigation of such violation. The award shall be issued in writing within three (3) hours after the close of the hearing and may be issued without an opinion. If any Party desires a written opinion, one shall be issued within fifteen (15) days, but its issuance shall not delay compliance with, or enforcement of, the Award. The arbitrator may order cessation of the violation of the Article and other appropriate relief, and such award shall be served on all Parties by hand or registered mail upon issuance.

7.8.5 Such award shall be final and binding on all Parties and may be enforced by any court of competent jurisdiction upon the filing of this Agreement and all other relevant documents referred to herein above in the following manner. Written notice of the filing of such enforcement proceedings shall be given to the other Party. In any judicial proceeding to obtain a temporary order enforcing the arbitrator's award as issued under this Article, all Parties waive the right to a hearing and agree that such proceedings may be ex parte. Such agreement does not waive any Party's right to participate in a hearing for a final order of enforcement. The court's order or orders enforcing the arbitrator's award shall be served on all Parties by hand or by delivery to their address as shown on this Agreement (for a Union), as shown on their business contract for work under this Agreement (for a Contractor) and to the representing Union (for an employee), by certified mail by the Party or Parties first alleging the violation.

7.8.6 Any rights created by statute or law governing arbitration proceedings inconsistent with the above procedure or which interfere with compliance hereto are hereby waived by the Parties to whom they accrue.

7.8.7 The fees and expenses of the arbitrator shall be equally divided between the Party or Parties initiating this procedure and the respondent Party or Parties, except that any participation by the City or the CWA Administrator, as observers, will not make the City, or the CWA Administrator a Party to the Arbitration, for the purposes of fee sharing provisions.

ARTICLE 8
WORK ASSIGNMENTS AND JURISDICTIONAL DISPUTES

Section 8.1 Assignment of Work The assignment of Project Work will be solely the responsibility of the Employer performing the work involved; and such work assignments will be in accordance with the Plan for the Settlement of Jurisdictional Disputes in the Construction Industry (the "Plan") or any successor Plan.

Section 8.2 The Plan

8.2.1 All jurisdictional disputes on Project Work between or among the building and construction trades Unions and the Employers parties to this Agreement, shall be settled and adjusted according to the present Plan established by the Building and Construction Trades Department or any other plan or method of procedure that may be adopted in the future by the Building and Construction Trades Department. Decisions rendered shall be final, binding and conclusive on the Employers and Unions parties to this Agreement.

8.2.2 If a dispute arising under this Article involves the Southwest Regional Council of Carpenters or any of its subordinate bodies, an Arbitrator shall be chosen by the procedures specified in Article V, Section 5, of the Plan from a list composed John Kagel, Thomas Angelo, Robert Hirsch, and Thomas Pagan, and the Arbitrator's hearing on the dispute shall be held at the offices of the Trades Council within 14 days of the selection of the Arbitrator. All other procedures shall be as specified in the Plan.

Section 8.3 No Work Disruption Over Jurisdiction All jurisdictional disputes shall be resolved without the occurrence of any strike, work stoppage, or slow-down of any nature, and the Employer's assignment shall be adhered to until the dispute is resolved. Individuals violating this section shall be subject to immediate discharge.

Section 8.4 Pre-Job Conferences As provided in Article 16, each Contractor will conduct a pre-job conference with the appropriate affected Union(s) prior to commencing work. The Trades Council and the CWA Administrator shall be advised in advance of all such conferences and may participate if they wish.

Section 8.5 Resolution of Jurisdictional Disputes If any actual or threatened strike, sympathy strike, work stoppage, slow down, picketing, hand-billing or otherwise advising the public that a labor dispute exists, or interference with the progress of Project Work by reason of a jurisdictional dispute or disputes occurs, the Parties shall exhaust the expedited procedures set forth in the Plan, if such procedures are in the plan then currently in effect, or otherwise as in Article 7 above.

ARTICLE 9
MANAGEMENT RIGHTS

Section 9.1 Contractor and City Rights The Contractors and the City have the sole and exclusive right and authority to oversee and manage construction operations on Project Work without any limitations unless expressly limited or required by a specific provision of this Agreement, including the incorporated MLAs. In addition to the following and other rights of the Contractors enumerated in this Agreement, the Contractors expressly reserve their management rights and all the rights conferred upon them by law. The Contractor's rights include, but are not limited to, the right to:

(a) Plan, direct and control operations of all work;

(b) Hire, promote, transfer and layoff their own employees, respectively, as deemed appropriate to satisfy work and/or skill requirements;

(c) Promulgate and require all employees to observe reasonable job rules and security and safety regulations;

(d) Discharge, suspend or discipline their own employees for just cause;

(e) Utilize, in accordance with City approval, any work methods, procedures or techniques, and select, use and install any types or kinds of materials, apparatus or equipment, regardless of source of manufacture or construction; assign and schedule work at their discretion; and

(f) Assign overtime, determine when it will be worked and the number and identity of employees engaged in such work, subject to such provisions in the applicable Master Labor Agreement (s) requiring such assignments be equalized or otherwise made in a nondiscriminatory manner.

Section 9.2 Specific City Rights In addition to the following and other rights of the City enumerated in this Agreement, the City expressly reserves its management rights and all the rights conferred on it by law. In addition, City reserves its rights set out in City's Standard Specification related to removal of employees from the jobsite. The City's rights (and those of the Contract Administrator on its behalf) include but are not limited to the right to:

(a) Inspect any construction site or facility to ensure that the Contractor follows the applicable safety and other work requirements;

(b) Require Contractors to establish a different work week or shift schedule for particular employees as required to meet the operational needs of the Project Work at a particular location;

(c) At its sole option, terminate, delay and/or suspend any and all portions of the covered work at any time; prohibit some or all work on certain days or during certain hours of the day to accommodate the ongoing operations of the City's Facilities and/or to mitigate the effect of ongoing Project Work on businesses and residents in the neighborhood of the Project site; and/or require such other operational or schedule changes it deems necessary, in its sole judgment, to effectively maintain its primary mission and remain a good neighbor to those in the area of its

facilities. (In order to permit the Contractors and Unions to make appropriate scheduling plans, the City will provide the CWA Administrator, and the affected Contractor(s) and Union(s) with reasonable notice of any changes to the contract provisions it requires pursuant to this section; provided, however, that if notice is not provided in time to advise employees not to report for work, show-up pay shall be due pursuant to the provision of Article 6, Section 6.6);

(d) Approve any work methods, procedures and techniques used by Contractors whether or not these methods, procedures or techniques are part of industry practices or customs; and

(e) Retain the CWA Administrator of City's choosing to investigate and process complaints, in the matters set forth in Articles 7 and 10.

Section 9.3 Use of Materials There will be no limitations or restriction by Union upon a Contractor's choice of materials or design, nor, regardless of source or location, upon the full use and utilization, of equipment, machinery, packaging, precast, prefabricated, prefinished, or preassembled materials, tools or other labor saving devices, subject to the application of the State Public Contracts and Labor Codes as required by law. The onsite installation or application of such items shall be performed by the craft having jurisdiction over such work.

Section 9.4 Special Equipment, Warranties and Guaranties

9.4.1 It is recognized that certain equipment of a highly technical and specialized nature may be installed at Project Work sites. The nature of the equipment, together with the requirements for manufacturer's warranties, may dictate that it be prefabricated pre-piped and/or pre-wired and that it be installed under the supervision and direction of the City's and/or manufacturer's personnel. Provided that Union employees are qualified and/or certified to perform such specialized work, Unions agree to install such equipment without incident to insure compliance with the specifications for the equipment being installed and to insure compliance with contract documents, including but not limited to, plans, specifications, warranty requirements and scope of work under contract documents.

9.4.2 The Parties recognize that the Contractor will initiate from time to time the use of new technology, equipment, machinery, tools, and other labor-savings devices and methods of performing Project Work. The Union agrees that they will not restrict the implementation of such devices or work methods. The Unions will accept and will not refuse to handle, install or work with any standardized and/or catalogue: parts, assemblies, accessories, prefabricated items, preassembled items, partially assembled items or materials whatever their source of manufacture or construction.

9.4.3 If any disagreement between the Contractor and the Unions concerning the methods of implementation or installation of any equipment, or device or item, or method of work, arises, or whether a particular part or pre-assembled item is a standardized or catalog part or item, the work will precede as directed by the Contractor and the Parties shall immediately consult over the matter. If the disagreement is not resolved, the affected Union(s) shall have the right to proceed through the procedures set forth in Article 10.

9.4.4 No Less Favorable Treatment The parties agree that Project Work will not receive less favorable treatment than that on any other project which the Unions, Contractors and employees work.

ARTICLE 10
SETTLEMENT OF GRIEVANCES AND DISPUTES

Section 10.1 Cooperation and Harmony on Site

10.1.1 This Agreement is intended to establish and foster continued close cooperation between management and labor. At its own cost the Trades Council shall assign a representative to each Project Work for the purpose of assisting the local Unions, and working with the CWA Administrator, together with the Contractors, to complete the construction of the Project economically, efficiently, continuously and without any interruption, delays or work stoppages.

10.1.2 The CWA Administrator, the Contractors, Unions, and employees collectively and individually, realize the importance to all Parties of maintaining continuous and uninterrupted performance of the Project Work, and agree to resolve disputes in accordance with the grievance provisions set forth in this Article or, as appropriate, those of Article 7 or 8.

10.1.3 The CWA Administrator shall oversee the processing of grievances under this Article and Articles 7 and 8, including the scheduling and arrangements of facilities for meetings, selection of the arbitrator from the agreed-upon panel to hear the case, and any other administrative matters necessary to facilitate the timely resolution of any dispute; provided, however, it is the responsibility of the principal parties to any pending grievance to insure the time limits and deadlines are met. In the event that the above Arbitrators are unavailable at any time, the CWA Administrator shall request a panel seven (7) alternative arbitrators from the Federal Mediation and Conciliation Service, and the Contractor and involved Union shall attempt to mutually select an Arbitrator from that panel. In the event that the Contractor and the Union cannot come to an agreement, the parties shall, beginning with the Contractor, alternate in striking arbitrators from the list until one name remains who shall be the arbitrator.

Section 10.2 Processing Grievances Any questions arising out of and during the term of this Agreement involving its interpretation and application, which includes applicable provisions of the Master Labor Agreement, but not jurisdictional disputes or alleged violations of Section 7.1 and 7.4 and similar provisions, shall be considered a grievance and subject to resolution under the following procedures.

Step 1. Employee Grievances When any employee subject to the provisions of this Agreement feels aggrieved by an alleged violation of this Agreement, the employee shall, through his local Union business representative or, job steward, within ten (10) working days after the occurrence of the violation, give notice to the work site representative of the involved Contractor stating the provision(s) alleged to have been violated. A business representative of the local Union or the job steward and the work site representative of the involved Contractor shall meet and

endeavor to resolve the matter within ten (10) working days after timely notice has been given. If they fail to resolve the matter within the prescribed period, the grieving party may, within ten (10) working days thereafter, pursue Step 2 of this grievance procedure provided the grievance is reduced to writing, setting forth the relevant information, including a short description thereof, the date on which the alleged violation occurred, and the provision(s) of the Agreement alleged to have been violated. Grievances and disputes settled at Step 1 shall be non-precedential except as to the parties directly involved.

Union or Contractor Grievances Should the Union(s) or any Contractor have a dispute with the other Party (ies) and, if after conferring within ten (10) working days after the disputing Party knew or should have known of the facts or occurrence giving rise to the dispute, a settlement is not reached within five (5) working days, the dispute shall be reduced to writing and processed to Step 2 in the same manner as outlined in Step 1 above for the adjustment of an employee complaint.

Step 2. The business manager of the involved Union or his designee, together with the site representative of the involved Contractor shall meet within seven (7) working days of the referral of the dispute to this second step to arrive at a satisfactory settlement thereof. If the Parties fail to reach an agreement, the dispute may be appealed in writing in accordance with the provisions of Step 3 within seven (7) calendar days after the initial meeting at Step 2.

Step 3. (a) If the grievance shall have been submitted but not resolved under Step 2, either the Union of Contractor Party may request in writing to the CWA Administrator with copy(ies) to the other Party(ies) within seven (7) calendar days after the initial Step 2 meeting, that the grievance be submitted to an arbitrator selected from the agreed upon list in "Attachment D" attached hereto, on a rotational basis in the order listed. The CWA Administrator shall notify the parties to the grievance of the date, time and location of the hearing. The failure of any party to attend said hearing shall not delay the hearing of evidence or the issuance of any decision by the arbitrator. The decision of the arbitrator shall be final and binding on all parties. Should any party seek confirmation of the award made by the arbitrator, the prevailing party shall be entitled to receive its reasonable attorney fees and costs.

(b) Failure of the grieving Party to adhere to the time limits established herein shall render the grievance null and void. The time limits established herein may be extended only by consent of the Parties involved at the particular step where the extension is agreed upon. The arbitrator shall have the authority to make decisions only on issues presented and shall not have the authority to change, amend, add to or detract from any of the provisions of this Agreement.

(c) The fees and expenses incurred by the arbitrator, as well as those jointly utilized by the Parties (i.e. conference room, court reporter, etc.) in arbitration, shall be divided equally by the Parties to the arbitration.

Section 10.3 Limit on Use of Procedures The procedures contained in this Article shall not be applicable to any alleged violation of Articles 7 or 8, with a single exception that any employee

discharged for violation of Section 7.2, or Section 8.3, may resort to the procedures of this Article to determine only if he/she was, in fact, engaged in that violation.

Section 10.4 Notice The CWA Administrator (and the City, in the case of any grievance regarding the Scope of this Agreement), shall be notified by the involved Contractor of all actions at Steps 2 and 3, and further, the CWA Administrator shall, upon its own request, be permitted to participate fully in all proceedings at such steps. CWA Administrator's participation shall not result in the City or CWA Administrator being deemed as a Party to the Arbitration for the purposes of fee sharing provisions.

ARTICLE 11
REGULATORY COMPLIANCE

Section 11.1 Compliance with All Laws The Trades Council and all Unions, Contractors, and their employees shall comply with all applicable federal and state laws, ordinances and regulations including, but not limited to, those relating to safety and health, employment and applications for employment. All employees shall comply with the safety regulations established by the City, the CWA Administrator or the Contractor. Employees must promptly report any injuries or accidents to a supervisor.

Section 11.2 Prevailing Wage Compliance All Contractors shall comply with the state laws and regulations pertaining to payment of prevailing wages. Compliance with this obligation may be enforced by the appropriate parties through Article 10, above, or by pursing the remedies available under state law through the Labor Commissioner or the Department of Industrial Relations.

Section 11.3 Violations of Law Should there be a finding by the CWA Administrator or a Court or administrative tribunal of competent jurisdiction that a Contractor has violated federal and/or state law or regulation, the City, upon notice to the Contractor that it or its subcontractors is in such violation (including any finding of non-compliance with the California prevailing wage obligations as enforced pursuant to DIR regulations), and in the absence of the Contractor or subcontractor remedying such violation, may take such action as it is permitted by law or contract to encourage that Contractor to come into compliance, including, but not limited to, assessing fines and penalties and/or removing the offending Contractor from Project Work. Additionally, in accordance with the Contract between the City and the Contractor, the City may cause the Contractor to remove from Project work any subcontractor who is in violation of state or federal law.

ARTICLE 12
SAFETY AND PROTECTION OF PERSON AND PROPERTY

Section 12.1 Safety

12.1.1 It shall be the responsibility of each Contractor to ensure safe working conditions and employee compliance with any safety rules required by State Law, contained herein or established by the City or the Contractor, whichever is most restrictive shall apply. It is understood

that employees have an individual obligation to use diligent care to perform their work in a safe manner and to protect themselves and the property of the Contractor and the City.

12.1.2 Employees shall be bound by the safety, security and visitor rules established by the Contractor and/or the City. These rules will be published and posted. An employee's failure to satisfy his/her obligations under this section will subject him/her to discipline, up to and including discharge.

12.1.3 The Parties shall adopt the Substance Abuse Policy attached hereto as **Attachment "E,"** which shall be the policy and procedure utilized under this Agreement.

Section 12.2 Suspension of Work for Safety A Contractor may suspend all or a portion of the job to protect the life and safety of employees. In such cases, employees will be compensated only for the actual time worked; provided, however, that where the Contractor requests employees to remain at the site and be available for work, the employees will be compensated for stand-by time at their basic hourly rate of pay.

Section 12.3 Water and Sanitary Facilities The Contractor shall provide adequate supplies of drinking water and sanitary facilities for all employees as required by state law or regulation.

ARTICLE 13
TRAVEL AND SUBSISTENCE

Travel expenses, travel time, subsistence allowances, zone rates and parking reimbursements shall be paid in accordance with the applicable Master Labor Agreement unless superseded by the applicable prevailing wage determination.

ARTICLE 14
APPRENTICES

Section 14.1 Importance of Training The Parties recognize the need to maintain continuing support of the programs designed to develop adequate numbers of competent workers in the construction industry, the obligation to capitalize on the availability of the local work force in the area served by the City, and the opportunities to provide continuing work under the construction program. To these ends, the Parties will facilitate, encourage, and assist local residents to commence and progress in Labor/Management Apprenticeship and/or training Programs in the construction industry leading to participation in such apprenticeship programs. The Trades Council will work to identify, or establish and maintain, effective programs and procedures for persons interested in entering the construction industry and which will help prepare them for the formal joint labor/management apprenticeship programs maintained by the signatory Unions.

Section 14.2 Use of Apprentices

14.2.1 Apprentices used on Projects under this Agreement shall be registered in Joint Labor Management Apprenticeship Programs approved by the State of California. Apprentices

may comprise up to thirty percent (30%) of each craft's work force (calculated by hours worked) at any time, unless the standards of the applicable joint apprenticeship committee confirmed by the Division of Apprenticeship Standards ("DAS"), establish a lower or higher maximum percentage. Where the standards permit a higher percentage, such percentage shall apply on Project Work. Where the applicable standards establish a lower percentage, the applicable Union will use its best efforts with the Joint Labor Management apprenticeship committee and, if necessary, the DAS to permit up to thirty percent (30%) apprentices on the Project.

14.2.2 The Unions agree to cooperate with the Contractor in furnishing apprentices as requested up to the maximum percentage. The apprentice ratio for each craft shall be in compliance, at a minimum, with the applicable provisions of the Labor Code relating to utilization of apprentices. The City shall encourage such utilization, and, both as to apprentices and the overall supply of experienced workers. The Trades Council will work to assure appropriate and maximum utilization of apprentices and the continuing availability of both apprentices and journey persons.

14.2.3 The Parties agree that apprentices will not be dispatched to Contractors working under this Agreement unless there is a journeymen working on the project where the apprentice is to be employed who is qualified to assist and oversee the apprentice's progress through the program in which he is participating.

14.2.4 All apprentices shall work under the direct supervision of a journeyman from the trade in which the apprentice is indentured. A journeyman shall be defined as set forth in the California Code of Regulations, Title 8 [apprenticeship] section 205, which currently defines a journeyman as a person who has either completed an accredited apprenticeship in his or her craft, or has completed the equivalent of an apprenticeship in length and content of work experience and all other requirements in the craft which has workers classified as journeyman in the apprenticeable occupation. In the instance of Core Employees, should a question arise as to a journeyman's qualification under this subsection, the Contractor shall provide adequate proof evidencing the worker's qualification as a journeyman to the Trades Council.

Section 14.3 Identification and Retention of Skilled Labor and Employment of Local Residents
The Project Work will require large numbers of craft personnel and other supporting employees. It is therefore the understanding and intention of the Parties to use the opportunities provided by the extensive amount of work to be covered on these Projects to promote, through cooperative efforts, programs and procedures (which may include, for example, programs to prepare persons for entrance into formal labor/management apprenticeship and/or training programs) to the community describing opportunities available as a result of the Project Work, for involvement of Local Residents in the construction industry, to assist them in entering the construction trades, and, through utilization of labor/management apprenticeship and/or training programs, to provide training opportunities for Local Residents and students and graduates of the City wishing to pursue a career in construction. Such cost for programs and training will be the responsibility of the Union and contractors. The City will work with the Unions, trade groups, and Contractors, in marketing such potential job and training opportunities to encourage application from Moreno Valley residents. Further, with concurrence from the CWA Administrator, the Contractors and the

Unions will work together to promptly develop and implement procedures for the identification of craft needs, the scheduling of work to facilitate the utilization of available craft employees, and the securing of services of craft employees in sufficient numbers to meet the demand of the Project Work to be undertaken. The City will work with the Contractors and Unions in promoting said opportunities to encourage application from Moreno Valley residents. The CWA Administrator, the Contractor, and the Unions will explore opening up a training facility in Moreno Valley.

ARTICLE 15
WORKING CONDITIONS

Section 15.1 Meal and Rest Periods There will be no non-working times established during working hours except as may be required by applicable state law or regulations. Meal periods and Rest periods shall be as provided for in Wage Order 16. Individual coffee containers will be permitted at the employees' work location; however, there will be no organized coffee breaks.

Section 15.2 Work Rules The Contractor shall establish such reasonable work rules as they deem appropriate and not inconsistent with this Agreement that are not in conflict with City Contract Documents. These rules will be posted at the work sites by the Contractor and may be amended thereafter as necessary. Failure to observe these rules and regulations by employees may be grounds for discipline up to and including discharge.

Section 15.3 Emergency Use of Tools and Equipment There should be no restrictions on the emergency use of any tools by any qualified employee or supervisor, or on the use of any tools or equipment for the performance of work within the jurisdiction, provided the employee can safely use the tools and/or equipment involved and is compliance with applicable governmental rules and regulations.

Section 15.4 Access Restrictions for Cars Recognizing the nature of the work being conducted on the site, employee access by a private automobile may be limited to certain roads and/or parking areas.

ARTICLE 16
PRE-JOB CONFERENCES

Section 16.1 Each Primary Contractor which is awarded a Construction Contract by the City for Project Work shall conduct a Pre-Job conference with the appropriate affected Union(s) prior to commencing work. All Contractors who have been awarded contracts by the Primary Contractor shall attend the Pre-Job conference. The Trades Council and the CWA Administrator shall be advised in advance of all such conferences and may participate if they wish. All work assignments shall be disclosed by the Primary Contractor and all Contractors at the Pre-Job conference in accordance with industry practice. Should there be any formal jurisdictional dispute raised under Article 8, the CWA Administrator shall be promptly notified. Primary Contractor shall have available at the Pre-Job conference the plans and drawing for the work to be performed on the Project. Should additional Project Work not previously included within the scope of the Project Work be added, the Contractors performing such work will conduct a separate pre-job for such

newly included work.

ARTICLE 17
LABOR/MANAGEMENT COOPERATION

Section 17.1 Joint Committee the Parties to this Agreement may establish a six (6) person Joint Administrative Committee (JAC). This JAC shall be comprised of three (3) representatives selected by the City and three (3) representatives selected by the Trades Council to monitor compliance with the terms and conditions of this Agreement and to recommend amendments to this Agreement, with the exception of the dollar threshold specified in Section 2.2(a) and the term of this Agreement under Section 22.1, when doing so would be to the mutual benefit of the Parties. Each representative shall designate an alternate who shall serve in his or her absence for any purpose contemplated by this Agreement. A quorum will consist of at least two (2) representatives selected by the City and at least two (2) representatives selected by the Trades Council. For voting purposes, only an equal number of City and Union representatives present may constitute a voting quorum.

Section 17.2 Functions of Joint Committee The Committee shall meet on a schedule to be determined by the Committee or at the call of the joint chairs, to discuss the administration of the Agreement, the progress of the Project, general labor management problems that may arise, and any other matters consistent with this Agreement. Substantive grievances or disputes arising under Articles 7, 8 or 10 shall not be reviewed or discussed by this Committee but shall be processed pursuant to the provisions of the appropriate Article. The CWA Administrator shall be responsible for the scheduling of the meetings, the preparation of the agenda topics for the meetings, with input from the Unions, the Contractors and the City. Notice of the date, time and place of meetings, shall be given to the Committee members at least three (3) days prior to the meeting. The CWA Administrator shall prepare quarterly reports on apprentice utilization and the training and employment of City residents, and a schedule of Project Work and estimated number of craft workers needed. The Committee or an appropriate subcommittee, may review such reports and make any recommendations for improvement, if necessary, including increasing the availability of skilled trades, and the employment of local residents or other individuals who should be assisted with appropriate training to qualify for apprenticeship programs.

ARTICLE 18
SAVINGS AND SEPARABILITY

Section 18.1 Savings Clause It is not the intention of the City, the CWA Administrator, Contractor or the Union parties to violate any laws governing the subject matter of this Agreement. The Parties hereto agree that in the event any provision of this Agreement is finally held or determined to be illegal or void as being in contravention of any applicable law or regulation, the remainder of the Agreement shall remain in full force and effect unless the part or parts so found to be void are wholly inseparable from the remaining portions of this Agreement. Further, the Parties agree that if and when any provision(s) of this Agreement is finally held or determined to be illegal or void by a court of competent jurisdiction, the Parties will promptly enter into

negotiations concerning the substantive effect of such decision for the purposes of achieving conformity with the requirements of any applicable laws and the intent of the Parties hereto. If the legality of this Agreement is challenged and any form of injunctive relief is granted by any court, suspending temporarily or permanently the implementation of this Agreement, then the Parties agree that all Project Work that would otherwise be covered by this Agreement should be continued to be bid and constructed without application of this Agreement so that there is no delay or interference with the ongoing planning, bidding and construction of any Project Work.

Section 18.2 Effect of Injunctions or Other Court Orders The Parties recognize the right of the City to withdraw, at its absolute discretion, the utilization of the Agreement as part of any bid specification should a Court of competent jurisdiction issue any order, or any applicable statute which could result, temporarily or permanently in delay of the bidding, awarding and/or construction on the Project.

ARTICLE 19
WAIVER

A waiver of or a failure to assert any provisions of this Agreement by any or all of the Parties hereto shall not constitute a waiver of such provision for the future. Any such waiver shall not constitute a modification of the Agreement or change in the terms and conditions of the Agreement and shall not relieve; excuse or release any of the Parties from any of their rights, duties or obligations hereunder.

ARTICLE 20
INDEMNITY

To the full extent permitted by law, Trades Council and Unions agree to indemnify, defend and hold harmless the City, CWA Administrator, City's officers, employees and agents ("Indemnified Parties") against, and will hold and save them and each of them harmless from, any and all claims, demands, actions, suits or other legal proceedings, but not a grievance arising under the terms of this Agreement, brought against the Indemnified Parties arising out of negligence, willful misconduct, or accidental conduct engaged in solely by Union, its elected and appointed officials, officers, agents and employees. Notwithstanding the foregoing, the Union shall not be liable for the defense or indemnification of the Indemnified Parties for claims, demands, actions, complaints, suits or other legal proceedings arising out of conduct of any contractor, subcontractor or the Indemnified Parties. Notwithstanding the above, this Article shall not apply to any legal challenge (in a court of law, with an administrative agency or otherwise) over the adoption by the City of this Agreement.

ARTICLE 21
AMENDMENTS

The provisions of this Agreement can be renegotiated, supplemented, rescinded or otherwise altered only by mutual agreement in writing, hereafter signed by the negotiating Parties hereto. In

the event of any conflict or ambiguity between this Agreement and any Attachment or exhibit, the provisions of this Agreement shall govern.

ARTICLE 22
DURATION OF THE AGREEMENT

Section 22.1 Duration

22.1.1 This Agreement shall be effective from the date signed by all the parties, which shall be not more than 90 days from the date City Council authorizes the Agreement. Unions without signatures on the Union Signature Page within the aforementioned 90 day period shall not be party to the Agreement. The agreement shall remain in effect for an initial period of five (5) years. Any covered Project Work awarded during the term of this Agreement shall continue to be covered hereunder, until completion of the Project Work, notwithstanding the expiration date of this Agreement.

22.1.2 This Agreement may be extended by written mutual consent of the City, as directed by the City Council and the signatory Unions for such further periods as the Parties shall agree to.

Section 22.2 Turnover and Final Acceptance of Completed Work

22.2.1 Construction of any phase, portion, section, or segment of Project Work shall be deemed complete when such phase, portion, section or segment has been turned over to the City by the Contractor and the City has accepted such phase, portion, section, or segment. As areas and systems of the Project are inspected and construction-tested and/or approved and accepted by the City or third parties with the approval of the City, the Agreement shall have no further force or effect on such items or areas, except when the Contractor is directed by the City to engage and repairs or modifications required by its contract(s) with the City.

22.2.2 Notice of each final acceptance received by the Contractor will be provided to the Trades Council with the description of what portion, segment, etc. has been accepted. Final acceptance may be subject to a "punch" list, and in such case, the Agreement will continue to apply to each such item on the list until it is completed to the satisfaction of the City and Notice of Completion is issued by the City or its representative to the Contractor. At the request of the Union, complete information describing any "punch" list work, as well as any additional work required of a Contractor at the direction of the City pursuant to Section 22.2.1 above, involving otherwise turned-over and completed facilities which have been accepted by the City, will be available from the CWA Administrator.

IN WITNESS whereof the Parties have caused this Community Workforce Agreement to be executed as of the date and year above stated.

CITY OF MORENO VALLEY

By: _____

City Manager

Date: 8/20/20

SAN BERNARDINO/RIVERSIDE COUNTIES

BUILDING AND CONSTRUCTION TRADES COUNCIL, AFL-CIO

By: _____

William J. Perez,

Executive Secretary/Business Manager

ATTEST:

By: _____

City Clerk

APPROVED AS TO FORM:

_____

City Attorney

08/19/2020

Union Signatory Page

Heat & Frost Insulators (Local 5) Eddy Perez 7-9-20

Boilermakers (Local 92) Luis Miramontes NG 7-23-20

Bricklayers & Allied Craftworkers (Local 4)

Cement Masons (Local 500)

Drywall Finishers (Local 1136/D.C. 36)

Electrical Workers (Local 440) 7-8-20

Elevator Constructors (Local 18) 7.9.20

Glaziers (Local 636/D.C. 36)

Iron Workers (Reinforced – Local 416) 7-9-20

Iron Workers (Structural – Local 433) 7-10-2020

Laborers (Local 1184) 7/10/2020

Laborers (Local 300)

Operating Engineers (Local 12)

Operating Engineers (Local 12)

Operating Engineers (Local 12)

Painters & Allied Trades (Local 1036)

Pipe Trades (Local 364) 7/08/2020

Pipe Trades (Local 345)

Road Sprinkler Fitters (Local 669) on behalf of Brian Dunn

Plasterers (Local 200)

Plaster Tenders (Local 1414)

Resilient Floor (Local 1247/D.C. 36)

Roofers & Waterproofers (Local 220)

Sheet Metal Workers (Local 105)

Teamsters (Local 166) 7/9/2020

Southwest Regional Council of Carpenters 7/17/2020

Union Signatory Page

Heat & Frost Insulators (Local 5) _____

Boilermakers (Local 92) _____

Bricklayers & Allied Craftworkers (Local 4) _____

Cement Masons (Local 500) _____

Drywall Finishers (Local 1136/D.C. 36) _____

Electrical Workers (Local 440) _____

Elevator Constructors (Local 18) _____

Glaziers (Local 636/D.C. 36) _____

Iron Workers (Reinforced – Local 416) _____

Iron Workers (Structural – Local 433) 8/3/2020

Laborers (Local 1184) _____

Laborers (Local 300) _____

Operating Engineers (Local 12) _____

Operating Engineers (Local 12) 7/10/20

Operating Engineers (Local 12) 7/10/20

Painters & Allied Trades (Local 1036) _____

Pipe Trades (Local 364) 7/08/2020

Pipe Trades (Local 345) _____

Road Sprinkler Fitters (Local 669) _____

Plasterers (Local 200) _____

Plaster Tenders (Local 1414) _____

Resilient Floor (Local 1247/D.C. 36) _____

Roofers & Waterproofers (Local 220) _____

Sheet Metal Workers (Local 105) _____

Teamsters (Local 166) _____

Southwest Regional Council of Carpenters _____

Union Signatory Page

Heat & Frost Insulators (Local 5)	
Boilermakers (Local 92)	
Bricklayers & Allied Craftworkers (Local 4)	
Cement Masons (Local 500)	
Drywall Finishers (Local 1136/D.C. 36)	
Electrical Workers (Local 440)	
Elevator Constructors (Local 18)	
Glaziers (Local 636/D.C. 36)	
Iron Workers (Reinforced – Local 416)	
Iron Workers (Structural – Local 433)	
Laborers (Local 1184)	
Laborers (Local 300)	[signature]
Operating Engineers (Local 12)	
Operating Engineers (Local 12)	
Operating Engineers (Local 12)	
Painters & Allied Trades (Local 1036)	
Pipe Trades (Local 364)	[signature] 7/08/2020
Pipe Trades (Local 345)	
Road Sprinkler Fitters (Local 669)	
Plasterers (Local 200)	
Plaster Tenders (Local 1414)	
Resilient Floor (Local 1247/D.C. 36)	
Roofers & Waterproofers (Local 220)	
Sheet Metal Workers (Local 105)	
Teamsters (Local 166)	
Southwest Regional Council of Carpenters	

Union Signatory Page

Heat & Frost Insulators (Local 5)	
Boilermakers (Local 92)	
Bricklayers & Allied Craftworkers (Local 4)	
Cement Masons (Local 500)	
Drywall Finishers (Local 1136/D.C. 36)	Mark Bartlett
Electrical Workers (Local 440)	
Elevator Constructors (Local 18)	
Glaziers (Local 636/D.C. 36)	Mark Bartlett
Iron Workers (Reinforced – Local 416)	
Iron Workers (Structural – Local 433)	
Laborers (Local 1184)	
Laborers (Local 300)	
Operating Engineers (Local 12)	
Operating Engineers (Local 12)	
Operating Engineers (Local 12)	
Painters & Allied Trades (Local 1036)	Mark Bartlett
Pipe Trades (Local 364)	
Pipe Trades (Local 345)	
Road Sprinkler Fitters (Local 669)	
Plasterers (Local 200)	
Plaster Tenders (Local 1414)	
Resilient Floor (Local 1247/D.C. 36)	Mark Bartlett
Roofers & Waterproofers (Local 220)	
Sheet Metal Workers (Local 105)	
Teamsters (Local 166)	
Southwest Regional Council of Carpenters	

Union Signatory Page

Heat & Frost Insulators (Local 5)	
Boilermakers (Local 92)	
Bricklayers & Allied Craftworkers (Local 4)	
Cement Masons (Local 500)	
Drywall Finishers (Local 1136/D.C. 36)	
Electrical Workers (Local 440)	
Elevator Constructors (Local 18)	
Glaziers (Local 636/D.C. 36)	
Iron Workers (Reinforced – Local 416)	
Iron Workers (Structural – Local 433)	
Laborers (Local 1184)	
Laborers (Local 300)	
Operating Engineers (Local 12)	
Operating Engineers (Local 12)	
Operating Engineers (Local 12)	
Painters & Allied Trades (Local 1036)	
Pipe Trades (Local 364)	Allen V. Powell 7/08/2020
Pipe Trades (Local 345)	
Road Sprinkler Fitters (Local 669)	
Plasterers (Local 200)	
Plaster Tenders (Local 1414)	
Resilient Floor (Local 1247/D.C. 36)	
Roofers & Waterproofers (Local 220)	
Sheet Metal Workers (Local 105)	
Teamsters (Local 166)	
Southwest Regional Council of Carpenters	

Moreno Valley CWA

ATTACHMENT A – LETTER OF ASSENT

To be signed by all contractors awarded work covered by the City of Moreno Valley Community Workforce Agreement prior to commencing work.

[Contractor's Letterhead] CWA Administrator

Attn: _____

Re: Community Workforce Agreement – Letter of Assent

Dear Sir:

This is to confirm that [name of company] agrees to be party to and bound by the City of Moreno Valley Community Workforce Agreement effective_____, 2020, as such Agreement may, from time to time, be amended by the negotiating parties or interpreted pursuant to its terms. Such obligation to be a party and bound by this Agreement shall extend to all work covered by the agreement undertaken by this Company on the project and this Company shall require all of its contractors and subcontractors of whatever tier to be similarly bound for all work within the scope of the Agreement by signing and furnishing to you an identical letter of assent prior to their commencement of work.

Sincerely,

[Name of Construction Company]

By: _____ Name and Title of Authorized Executive

Contractor State License No.: _____

Business Address: _____

_____

Business Phone: _____

[Copies of this letter must be submitted to the CWA Administrator and to the Trades Council Consistent with Section 2.6 (b).]

ATTACHMENT B

FIRST TIER ZIP CODES (CITY BOUNDARY)
*Some Zip codes shared with neighboring cities

ADD ZIP CODES TBD

STANDARD ZIP CODES

92551		
92553		
92555		
92557		

SECOND TIER ZIP CODES REMAINDER OF RIVERSIDE COUNTY

91752	92241	92501
92201	92247	92502
92202	92448	92503
92203	92253	92504
92210	92254	92505
92211	92255	92506
92220	92258	92507
92223	92260	92508
92225	92261	92509
92226	92262	92513
92230	92263	92514
92234	92270	92516
92235	92274	92517
92236	92276	92518
92239	92282	92519
92240	92320	92521

92522
92530
92531
92532
92536
92539
92543
92544
92545
92546
92548
92549
92552
92553
92554
92555
92556
92557
92561
92562
92563
92564
92567
92581
92582
92583
92584
92585
92586
92587
92589
92590
92591
92592
92593
92595
92596
92860

ATTACHMENT C

CITY OF MORENO VALLEY
CRAFT REQUEST FORM

TO THE CONTRACTOR: Please complete and fax this form to the applicable union to request craft workers that fulfill the hiring requirements for this project. After faxing your request, please call the Local to verify receipt and substantiate their capacity to furnish workers as specified below. Please print your Fax Transmission Verification Reports and keep copies for your records.

The City of Moreno Valley Community Workforce Agreement establishes a goal that 30% of the total work hours shall be from Veterans, regardless of where they reside, and workers residing: first, in those first tier zip codes which overlap all of the City of Moreno Valley, as attached hereto, second, residing within Riverside County. For Dispatch purposes, employees residing within either of these two (2) areas, as well as Veterans, regardless of where they reside, shall be referred to as Local Residents.

TO THE UNION: Please complete the "Union Use Only" section on the next page and fax this form back to the requesting Contractor. Be sure to retain a copy of this form for your records.

CONTRACTOR USE ONLY

To: Union Local # _____ **Fax#** (___) _____ **Date:** _____

Cc: CWA Administrator

From: Company: _____ Issued By: _____

Contact Phone :(___) _____ Contact Fax: (___) _____

PLEASE PROVIDE ME WITH THE FOLLOWING UNION CRAFT WORKERS.

Craft Classification (i.e., plumber, painter, etc.)	Journeyman or Apprentice	Local Resident, Veteran or General Dispatch	Number of workers needed	Report Date	Report Time
TOTAL WORKERS REQUESTED = _____					

Please have worker(s) report to the following work address indicated below:

Project Name: _____ Site: _____ Address: _____

Report to: _____ On-site Tel: _____ On-site Fax: _____

Comment or Special Instructions: _____

UNION USE ONLY

Date dispatch request received:
Dispatch received by:
Classification of worker requested:
Classification of worker dispatched:

WORKER REFERRED

Name:
Date worker was dispatched:
Is the worker referred a: (check all that apply)

JOURNEYMAN	Yes _____	No _____
APPRENTICE	Yes _____	No _____
LOCAL RESIDENT	Yes _____	No _____
VETERAN	Yes _____	No _____
GENERAL DISPATCH FROM OUT OF WORK LIST	Yes _____	No _____

ATTACHMENT D

List of Neutral Arbitrators
[Subject to Confirmation]

Mark Burstein
Walter Daugherty
Fred Horowitz
Michael Prihar
Louis Zigman

ATTACHMENT "E"

SUBSTANCE ABUSE POLICY

The Parties recognize the problems which drug and alcohol abuse have created in the construction industry and the need to develop drug and alcohol abuse prevention programs. Accordingly, the Parties agree that in order to enhance the safety of the workplace and to maintain a drug and alcohol-free work environment, individual Employers may require applicants or employees to undergo drug and alcohol testing.

1. It is understood that the use, possession, transfer or sale of illegal drugs, narcotics, or other unlawful substances, as well as being under the influence of alcohol and the possession or consuming alcohol is absolutely prohibited while employees are on the Employer's job premises or while working on any jobsite in connection with work performed under the Community Workforce Agreement ("CWA").

2. No Employer may implement a drug testing program which does not conform in all respects to the provisions of this Policy.

3. No Employer may implement drug testing at any jobsite unless written notice is given to the Union setting forth the location of the jobsite, a description of the project under construction, and the name and telephone number of the Project Work Supervisor. Said notice shall be addressed to the office of each Union signing the CWA. Said notice shall be delivered in person or by registered mail before the implementation of drug testing. Failure to give such notice shall make any drug testing engaged in by the Employer a violation of the PLA, and the Employer may not implement any form of drug testing at such jobsite for the following six months.

4. An employer who elects to implement drug testing pursuant to this Agreement shall require all employees on the Project Work to be tested. With respect to individuals who become employed on the Project Work subsequent to the proper implementation of this drug testing program, such test shall be administered upon the commencement of employment on the project, whether by referral from a Union Dispatch Office, transfer from another project, or another method. Individuals who were employed on the project prior to the proper implementation of this drug testing program may only be subjected to testing for the reasons set forth in Paragraph 5(f) (1) through 5(f) (3) of this Policy. Refusal to undergo such testing shall be considered sufficient grounds to deny employment on the project.

5. The following procedure shall apply to all drug testing:

a. The Employer may request urine samples only. The applicant or employee shall not be observed when the urine specimen is given. An applicant or employee, at his or her sole option, shall, upon request, receive a blood test in lieu of a urine test. No employee of the Employer shall draw blood from a bargaining unit employee, touch or handle

urine specimen, or in any way become involved in the chain of custody of urine or blood specimens. A Union Business Representative, subject to the approval of the individual applicant or employee, shall be permitted to accompany the applicant or employee to the collection facility to observe the collection, bottling, and sealing of the specimen.

b. The testing shall be done by a laboratory approved by the Substance Abuse & Mental Health Services Administration (SAMHSA), which is chosen by the Employer and the Union.

c. An initial test shall be performed using the Enzyme Multiplied Immunoassay Technique (EMZT). In the event a question or positive result arises from the initial test, a confirmation test must be utilized before action can be taken against the applicant or employee. The confirmation test will be by Gas Chromatography Mass Spectrometry (GC/MS). Cutoff levels for both the initial test and confirmation test will be those established by the SAMHSA. Should these SAMHSA levels be changed during the course of this agreement or new testing procedures are approved, then these new regulations will be deemed as part of this existing agreement. Confirmed positive samples will be retained by the testing laboratory in secured long-term frozen storage for a minimum of one year. Handling and transportation of each sample must be documented through strict chain of custody procedures.

d. In the event of a confirmed positive test result the applicant or employee may request, within forty-eight (48) hours, a sample of his/her specimen from the testing laboratory for purposes of a second test to be performed at a second laboratory, designated by the Union and approved by SAMHSA. The retest must be performed within ten (10) days of the request. Chain of custody for this sample shall be maintained by the Employer between the original testing laboratory and the Union's designated laboratory. Retesting shall be performed at the applicant's or employee's expense. In the event of conflicting test results the Employer may require a third test.

e. If, as a result of the above testing procedure, it is determined that an applicant or employee has tested positive, this shall be considered sufficient grounds to deny the applicant or employee his/her employment on the Project Work.

f. No individual who tests negative for drugs or alcohol pursuant to the above procedure and becomes employed on the Project Work shall again be subjected to drug testing with the following exceptions:

1. Employees who are involved in industrial accidents resulting in damage to plant, property or equipment or injury to him/her (self) or others may be tested pursuant to the procedures stated hereinabove.

2. The Employer may test employees following thirty (30) days advance written notice to the employee(s) to be tested and to the applicable Union. Notice to the applicable Union shall be as set forth in Paragraph 3 above and such testing shall be pursuant to the procedures stated hereinabove.

3. The Employer may test an employee where the Employer has reasonable cause to believe that the employee is impaired from performing his/her job. Reasonable cause shall be defined as exhibiting aberrant or unusual behavior, the type of which is a recognized and accepted symptom of impairment (i.e., slurred speech, unusual lack of muscular coordination, etc.). Such behavior must be actually observed by at least two persons, one of whom shall be a Supervisor who has been trained to recognize the symptoms of drug abuse or impairment and the other of whom shall be the job steward. If the job steward is unavailable or there is no job steward on the project the other person shall be a member of the applicable Union's bargaining unit. Testing shall be pursuant to the procedures stated hereinabove. Employees who are tested pursuant to the exceptions set forth in this paragraph and who test positive will be removed from the Employer's payroll.

g. Applicants or employees who do not test positive shall be paid for all time lost while undergoing drug testing. Payment shall be at the applicable wage and benefit rates set f01ih in the applicable Union's Master Labor Agreement. Applicants who have been dispatched from the Union and who are not put to work pending the results of a test will be paid waiting time until such time as they are put to work. It is understood that an applicant must pass the test as a condition of employment. Applicants who are put to work pending the results of a test will be considered probationary employees.

6. The employers will be allowed to conduct periodic job site drug testing on the Project under the following conditions:

a. The entire jobsite must be tested, including any employee or subcontractor's employee who worked on that project three (3) working days before or after the date of the test;

b. Jobsite testing cannot commence sooner than thirty (30) days after start of the work on the Project;

c. Prior to start of periodic testing, a business representative will be allowed to conduct an educational period on company time to explain periodic jobsite testing program to affected employees;

d. Testing shall be conducted by a SAMHSA certified laboratory, pursuant to the provisions set forth in Paragraph 5 hereinabove.

e. Only two periodic tests may be performed in a twelve-month period.

7. It is understood that the unsafe use of prescribed medication, or where the use of prescribed medication impairs the employee's ability to perform work, is a basis for the Employer to remove the employee from the jobsite.

8. Any grievance or dispute which may arise out of the application of this Agreement shall be subject to the grievance and arbitration procedures set forth in the CWA.

9. The establishment or operation of this Policy shall not curtail any right of any employee found in any law, rule or regulation. Should any part of this Agreement be found unlawful by a court of competent jurisdiction or a public agency having jurisdiction over the parties, the remaining portions of the Agreement shall be unaffected, and the parties shall enter negotiations to replace the affected provision.

10. Present employees, if tested positive, shall have the prerogative for rehabilitation program at the employee's expense. When such program has been successfully completed the Employer shall not discriminate in any way against the employee. If work for which the employee is qualified exists, he/she shall be reinstated.

11. The Employer agrees that results of urine and blood tests performed hereunder will be considered medical records held confidential to the extent permitted or required by law. Such records shall not be released to any persons or entities other than designated Employer representatives and the applicable Union. Such release to the applicable Union shall only be allowed upon the signing of a written release and the information contained therein shall not be used to discourage the employment of the individual applicant or employee on any subsequent occas10n.

12. The Employer shall indemnify and hold the Union harmless against any and all claims, demands, suits, or liabilities that may arise out of the application of this Agreement and/or any program permitted hereunder.

13. Employees who seek voluntary assistance for substance abuse may not be disciplined for seeking such assistance. Requests from employees for such assistance shall remain confidential and shall not be revealed to other employees or management personnel without the employee's consent. Employees enrolled in substance abuse programs shall be subject to all Employer rules, regulations and job performance standards with the understanding that an employee enrolled in such a program is receiving treatment for an illness.

14. This Memorandum, of Understanding shall constitute the only Agreement in effect between the parties concerning drug and alcohol abuse, prevention and testing. Any modifications thereto must be accomplished pursuant to collective bargaining negotiations between the parties.

DRUG ABUSE PREVENTION AND

DETECTION APPENDIX A

CUTOFF LEVELS

DRUG	SCREENING METHOD	SCREENING LEVEL **	CONFIRMATION METHOD	CONFIRMATION LEVEL
Alcohol	EMIT	0.02%	CG/MS	0.02%
Amphetamines	EMIT	1000 ng/m*	CG/MS	500 ng/ml*
Barbiturates	EMIT	300 ng/ml	CG/MS	200 ng/ml
Benzodiazepines	EMIT	300 ng/ml	CG/MS	300 ng/ml
Cocaine	EMIT	300 ng/ml*	CG/MS	150 ng/ml*
Methadone	EMIT	300 ng/ml	CG/MS	100 ng/ml
Methaqualone	EMIT	300 ng/ml	CG/MS	300 ng/ml
Opiates	EMIT	2000 ng/ml*	CG/MS	2000 ng/ml*
PCP (Phencyclidine)	EMIT	25 ng/ml*	CG/MS	25 ng/ml*
THC (Marijuana)	EMIT	50 ng/ml*	CG/MS	15 ng/ml*
Propoxyphene	EMIT	300 ng/ml	CG/MS	100 ng/ml

* SAMHSA specified threshold

** A sample reported positive contains the Indicated drug at or above the cutoff level for that drug. A negative sample either contains no drug or contains a drug below the cutoff level.

EMIT - Enzyme Immunoassay
CC/MS - Gas Chromatography/Mass Spectrometry

SIDE LETTER OF AGREEMENT
TESTING POLICY FOR DRUG ABUSE

It is hereby agreed between the parties hereto that an Employer who has otherwise properly implemented drug testing, as set forth in the Testing Policy for Drug Abuse, shall have the right to offer an applicant or employee a "quick" drug screening test. This "quick" screen test shall consist either of the "ICUP" urine screen or similar test or an oral screen test. The applicant or employee shall have the absolute right to select either of the two "quick" screen tests, or to reject both and request a full drug test.

An applicant or employee who selects one of the quick screen tests, and who passes the test, shall be put to work immediately. An applicant or employee who fails the "quick" screen test, or who rejects the quick screen tests, shall be tested pursuant to the procedures set forth in the Testing Policy for Drug Abuse. The sample used for the "quick" screen test shall be discarded immediately upon conclusion of the test. An applicant or employee shall not be deprived of any rights granted to them by the Testing Policy for Drug Abuse as a result of any occurrence related to the "quick" screen test.

APPENDIX C

SOUTHERN CALIFORNIA EDISION PLANS

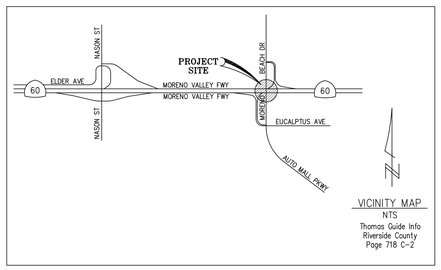

VICINITY MAP
NTS
Thomas Guide Info
Riverside County
Page 718 C-2

CONCRETE PRODUCTS

Precast concrete item complete with neck. Cover and inserts may be obtained from any of the following listed and approved manufacturers:

JENSEN PRECAST
14221 San Bernardino Ave., Fontana, Calif. 92335
Phone: (909) 350-4111
(800) 257-6100

OLDCASTLE PRECAST
10650 Hemlock Ave., Fontana, Calif. 92337
Phone: (909) 428-3700
(800) 626-3860

FOR HANDHOLE AND PULLBOX MANUFACTURERS, SEE UGS HP 200.

D41: Rev. 01/21/09

TYPICAL CONDUIT BANK SECTION
SEE UGS CD 120

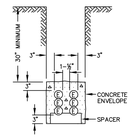

FULL ENCASEMENT
MORE THAN 4 CONDUITS
(BASE SPACER REQUIRED)

D72: Rev. 09/23/09

LEGEND OF DRAFTING SYMBOLS

TRENCH

- EDISON CONDUIT (DIST. & SL)
- CUST. OWNED CONDUIT
- RESIDENTIAL SERVICE CABLE
- E — EXISTING CONDUIT

STRUCTURES

- VAULT
- MANHOLE
- PME 3-5
- PME 6-12
- PULL BOX
- HANDHOLE
- SOE
- PAD
- 4'x4' BURD SWITCH ENCLOSURE
- 36" BURD SWITCH ENCLOSURE
- BURD TRANSFORMER ENCLOSURE
- STREET LIGHT ELECTROLIER
- C/I METER PANEL
- FIRE HYDRANT

CONNECTING TO EXISTING SCE STRUCTURES

- Per SCE requirements, customers are not allowed to enter, intercept or tie-in to existing SCE structures, equipment or conductors. This work will only be performed by SCE. Contact the appropriate SCE inspector to schedule an appointment. Customers may connect to an existing duct stub without a SCE inspector present.
- Per CPUC/SCE's Rule 15 B.1.A and Rule 16 D.1.A., the customer will provide all necessary excavations (with the exception of excavation under pads and primary splice boxes), material (including conduit and structures) and encasement, to be utilized in the intercept/tie-in process.
- The customer must adhere to all applicable Cal-OSHA, local, city, state and federal regulations, (including, but not limited to, all necessary shoring and traffic control in place to perform the intercept/tie-in work by SCE's underground civil contractors(s))
- Intercept/tie-in work must be coordinated with SCE's civil contractors through the Division Inspector/CCM to limit exposure of excavation(s). Customer is responsible for securing excavation(s).

DOB: 12/10/07

CONSTRUCTION NOTES:

Unless otherwise specified on the working drawing which forms a part of the specification, the Contractor/Developer shall furnish the following items at no cost to the Edison Company.

Southern California Edison Company has attempted to correctly show all existing utilities and substructures in the vicinity of the work, but does not guarantee there are no other substructures in the area. Failure of SCE to show all substructures in their correct location will not be a basis for a claim for extra work, and the contractor shall be responsible for all damages to substructures whether shown or not.

1. FOR GENERAL SPECIFICATIONS SEE UGS GI 001.

2. CONDUIT:
   a. Minimum cover in street or parkway is 30"/ 42" CalTrans below gutter grade, unless noted otherwise.
   b. Minimum cover on private property is 30"/ 42" CalTrans below finished grade, unless noted otherwise.
   c. Contractor is to furnish and install approved conduit to Edison specifications per UGS CD 1001, 110 AND 120.
   d. For the type of conduit for this job, See UGS CD 1101.
   e. Install all risers per UGS CD 160, 161, 162 and 170.
   f. Cap all mainline conduits per UGS CD 148 and service conduits per UGS CD 150.
   g. Install blank conduit plugs in all conduits terminating into Vaults, Manhole's, PMH's, SOE's & all cap locations, per UGS CD 1801 & UGS CD 1802.
   h. Install pull rope in all conduit runs. Pull rope to be 1/4" polypropylene or polyethylene rope, braided or twisted. For specifications, approved makes, and suppliers, see UGS GI 042.
   i. All conduit must be mandrelled with the approved mandrel UGS CD 197.

3. CONDUIT RADIUS REQUIREMENTS:
   a: The minimum radius for bends are:
      36" for conduits 3" in diameter or smaller
      48" for conduits 4" and 5" in diameter
      60" for 6" diameter conduit
   b: The minimum radius for all sweeps of all mainline conduits is 12'-6" (unless noted otherwise).

4. EXCAVATION AND BACKFILL:
   a. Work area shall be cleared and rough graded to within four inches of final grade prior to installation of Edison conduit or structures.
   b. All excavations shall be in accordance with the California State Construction Safety Orders (when applicable), Edison specifications, and all governing local ordinances.
   c. Each trench to be a uniform depth below final grade prior to installation of Edison conduit or structures.
   d. Backfill shall be provided by the Contractor for all excavations and shall include crushed rock, concrete, and/or imported backfill, when required.
   e. Backfill with a MINIMUM of one sack per yard sand cement slurry around and over vaults and manholes per UGS GI 030, section E.4 and around PMH's within one foot of finished grade, per UGS SS 5901.
   f. Backfill, per Edison specifications, shall immediately follow conduit or substructure installation. At no time shall conduit be left exposed over 24 hours.
   g. No rocks are allowed within 12 inches of direct-buried cables or any conduit without concrete encasement. Native backfill capable of passing through a one-half inch mesh screen shall be considered to be "rock free". If existing backfill does not pass through a 1/2" screen, place imported sand 3" below and 12" above Edison cables. After this point, no rocks larger than 12" diameter are permitted.
   h. All backfill shall be compacted to meet or exceed local ordinances or other requirements. It shall be placed in a manner that will not damage the conduit or substructure or allow future subsidence of the trench or structures.

5. PAVING:
   Repaving, where required, shall be placed in such a manner that interference with traffic, including pedestrian traffic, will be kept to a minimum. The Contractor shall establish a program of repaving acceptable to the Municipality, County, or other authority having jurisdiction and which is acceptable to Edison.

6. STRUCTURES:
   a. All substructures shall be constructed or installed to Edison specifications.
   b. Install protection barriers per UGS MS 830 when required in areas exposed to traffic, per Edison Inspector.
   c. All conduit lines and concrete floored substructures shall be water tight.
   d. All grounding materials shall be furnished and installed by the Contractor.

7. RETAINING WALLS:
   When required, retaining walls shall be provided by the Developer. Walls are required wherever grade rises more than 18 inches above the structure or 24" above the pad surface at a distance of 5 feet from the same, or in areas subject to erosion. Design and installation must comply with local building ordinances. Refer to Edison Inspector for typical space requirements.

8. PERMITS:
   All permits necessary for excavation shall be provided by the Contractor/Developer.

9. ACCESS:
   Heavy truck access shall be maintained to equipment locations. Structures must be clear of all appurtenances that would obstruct the loading or unloading of equipment.

10. SERVICES:
    a. Meters and services shall comply with Edison Electrical Services Requirements.
    b. Wiring must be in accordance with applicable local ordinances and approved by local Inspection Authorities.

11. LOCATION:
    a. The location of excavations and structures for Edison shall be as shown on the working drawing. No deviation from the planned locations will be permitted unless approved by the Edison Inspector. See UGS GI 001, section 2.2.
    b. Actual location of obstructions, storm drains, and/or other foreign utilities to be the responsibility of the Contractor. See UGS GI 001, section 2.3.

12. Contractor is to verify location and widths of all sidewalks and driveways prior to street light installation. See UGS GD 175.1, UGS CD 175.2 and UGS CD 175.3.

13. SURVEY:
    Surveying of street improvements, property corners, lot lines, finished grade, etc., necessary for the installation of underground facilities must be completed and markers or stakes placed prior to the start of the installation. In addition, Developer shall maintain the markers during the installation and inspection by Edison. Grade and property line stakes must show any offset measurements.

14. COORDINATION AND SUPERVISION:
    The Developer shall provide supervision over and coordination among the various contractors working within the development in order to prevent damage to Edison facilities. He is responsible for the cost of repairs, replacement, relocation, or other corrections to Edison facilities made necessary by his failure to provide supervision or to otherwise comply with these specifications.

15. TELEPHONE AND OTHER UTILITY REQUIREMENTS:
    The drawing prepared for this job may also cover the facilities to be installed for the telephone company and/or other utility. Any questions concerning details of their installation should be referred to the company concerned.

16. OWNERSHIP:
    Developer is to deed to the Edison Company all structures shown hereon except those shown as customer owned.

17. WARRANTY:
    Applicants expressly represent and warrant that all work performed and all material used in meeting Applicants' obligations herein are free from defects in workmanship and are in conformity with Southern California Edison Company's requirements. This warranty shall commence upon receipt by Applicants of the Company's final acceptance and shall expire one year from that date. Applicants agree to promptly correct to the Company's satisfaction and that of any governmental agency having jurisdiction and at Applicants' expense any breach of this warranty which may become apparent through inspection or operation of underground electric system by the Company during this warranty period.

18. INSPECTION:
    Inspection is required during the construction period. A 48 hour advance notice of intent to start construction is required from the contractor to the Southern California Edison Company. Standards of Edison construction requirements are available upon request.

Duct and Structure Inspector: WILLIE RADFORD Phone: (951) 663-0321
Cabling Construction Coordinator: N/A Phone: N/A

005: Rev. 07/17/07

DETAIL "A"
BRIDGE SECTION
6 DUCT SYSTEM (NO SCALE)

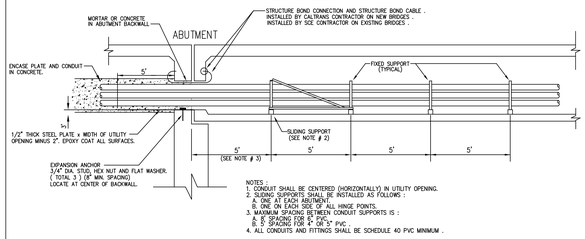

NOTES :
1. CONDUIT SHALL BE CENTERED (HORIZONTALLY) IN UTILITY OPENING.
2. SLIDING SUPPORTS SHALL BE INSTALLED AS FOLLOWS :
   A. ONE AT EACH ABUTMENT.
   B. ONE ON EACH SIDE OF ALL HINGE POINTS.
3. MAXIMUM SPACING BETWEEN CONDUIT SUPPORTS IS :
   A. 5' SPACING FOR 6" PVC
   B. 8' SPACING FOR 5" & 4" PVC.
4. ALL CONDUITS AND FITTINGS SHALL BE SCHEDULE 40 PVC MINIMUM .

DETAIL "D"
BRIDGE EXPANSION FITTINGS
6 DUCT SYSTEM (NO SCALE)

NOTE :
1. INSTALL EXPANSION FITTINGS A MINIMUM OF 28' FROM ALL SLIDING SUPPORTS .
2. CENTER EXPANSION FITTINGS BETWEEN SUPPORTS AND STAGGER AS SHOWN .

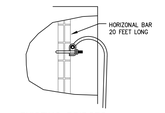

EXISTING BRIDGES

1. SCE CONTRACTOR SHALL INSTALL STRUCTURE BONDS ON EXISTING BRIDGES.
2. CHIP CONCRETE TO EXPOSE REBAR.
3. CLEAN REBAR AT CONNECTION POINT.
4. INSTALL 1/0 OR LARGER. TYPE THW COPPER WIRE WITH HIGH STRENGTH COPPER ALLOY GROUND CONNECTOR AND HIGH STRENGTH SILICON BRONZE U-BOLT ,NUTS AND LOCK WASHER.
5. EPOXY COAT CLAMPING COMPONENTS AND EXPOSED CONDUCTOR (ALL EXPOSED NON-FERROUS METAL).
6. REPAIR CAVITY WITH MORTAR.

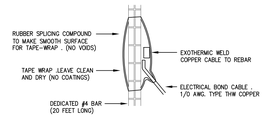

NEW BRIDGES

1. CALTRANS CONTRACTOR SHALL INSTALL STRUCTURE BONDS ON NEW BRIDGES .

DETAIL "E"
STRUCTURE BOND CONNECTION DETAILS
(NO SCALE)

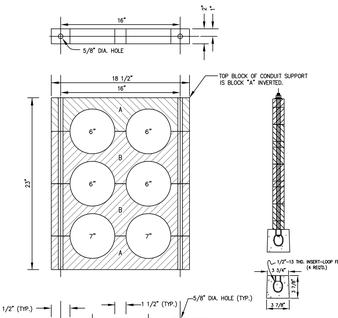

REV. 05/22/98

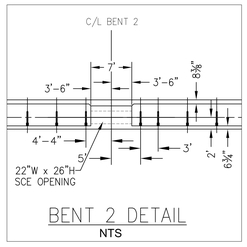

BENT 2 DETAIL
NTS

DETAIL "C"
PVC CONDUIT DEFLECTION SUPPORT
6 DUCT SYSTEM (NO SCALE)

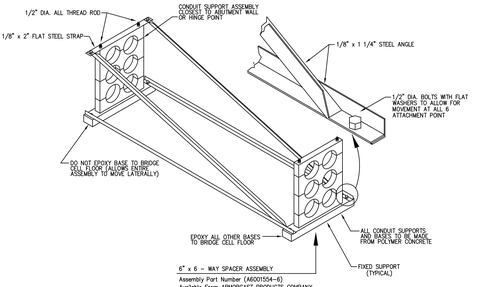

Assembly Part Number (A60015S4-6)
Available From ARMORCAST PRODUCTS COMPANY

MATERIALS REQ'D. PER SOLID CONDUIT SUPPORT

2- 1/2"-13 HOT DIPPED GALVANIZED NUT
2- 1/2" HOT DIPPED GALVANIZED WASHER
2- 1/2" HOT DIPPED GALVANIZED LOCK WASHER
2- 1/2"-13 X 29" HOT DIPPED GALVANIZED ALL-THREAD ROD
1- 3 7/8" X 3 7/8" X 18 1/2" POLYMER CONCRETE BLOCK "A"
2- POLYMER CONCRETE BLOCK "A"
2- POLYMER CONCRETE BLOCK "B"

222'-4" BRIDGE/ 5' SPACING
39 SUPPORTS REQ'D.
ALL PARTS OF SUPPORT (EXCLUDING BLOCK)TO BE HOT DIPPED GALVANIZED AFTER FABRICATION.
18 EXPANSION JOINT(S) REQ'D. PER UGS-C0191 (12-5" & 6-6")
100 1" SPACER BLOCKS

MATERIALS REQ'D. PER SLIDING CONDUIT SUPPORT

6- 1/2"-13 HOT DIPPED GALVANIZED NUT
10- 1/2" HOT DIPPED GALVANIZED WASHER
10- 1/2" HOT DIPPED GALVANIZED LOCK WASHER
6- 1/2"-13 X 1 1/4" HOT DIPPED GALVANIZED BOLTS
4- 1/2"-13 X 29" HOT DIPPED GALVANIZED ALL-THREAD ROD
2- 3 7/8" X 3 7/8" X 26 1/2" POLYMER CONCRETE BLOCK
2- 1 1/4" X 1 1/4" X 1/8" X 64" ANGLE
2- 1 1/4" X 1 1/4" X 1/8" X 66" ANGLE
1- 2" X 1/8" X 26 1/2" FLAT STRAP
4- POLYMER CONCRETE BLOCK "A"
4- POLYMER CONCRETE BLOCK "B"
2 SUPPORT REQ'D. EACH

ALL PARTS OF SUPPORT (EXCLUDING BLOCK)TO BE HOT DIPPED GALVANIZED AFTER FABRICATION.

EXPANSION JOINT FOR PLASTIC CONDUIT
UGS FIGURE CD 191-1
NTS

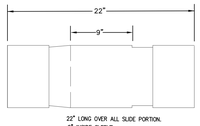

22" LONG OVER ALL SLIDE PORTION.
9" INSIDE SLEEVE.
17 1/2" LENGTH BETWEEN COUPLING.
15" OVER ALL PORTION.

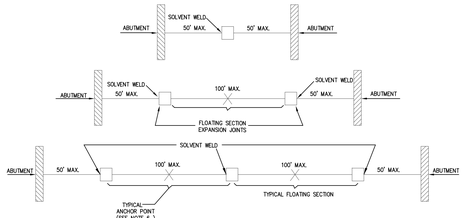

NOTE:
1. THE EXPANSION JOINT IS A LENGTH OF COUPLING STOCK EXTRUDED FROM THE SAME MATERIAL AS THE CONDUIT THAT IT JOINS.
2. THE MATING ENDS OF CONDUIT SHALL BE BEVELED TO PROVIDE A SMOOTH TRANSITION WITHIN THE JOINT.
3. THE EXPANSION JOINT SHALL BE SOLVENT WELDED 3 TO 4 INCHES ONTO ONE END OF THE CONDUIT.
4. THE MATING END OF THE CONDUIT SHALL THEN BE POSITIONED 22" INTO THE FREE END OF THE EXPANSION JOINT. DO NOT SOLVENT WELD.
5. INSTALL EXPANSION JOINTS AT THE MIDWAY POINT BETWEEN CONDUIT SUPPORTS SO THE MAXIMUM DISTANCE CAN BE MAINTAINED FROM ALL SPACERS, SUPPORTS, OR STRAPS.
6. INSTALL THE EXPANSION JOINT WITHIN 50' OF THE BRIDGE ABUTMENT (SEE UGS-C0190.1). WHEN ONLY ONE EXPANSION JOINT IS REQUIRED, DO NOT ANCHOR THE EXPANSION JOINT OR CONDUIT. WHEN TWO OR MORE EXPANSION JOINTS ARE REQUIRED, EACH SECTION OF FLOATING CONDUIT MUST BE ANCHORED AT MID-POINT BETWEEN THE EXPANSION JOINTS TO PREVENT EXCESSIVE LONGITUDINAL MOVEMENT. CONDUIT TO BE ANCHORED BY SOLVENT WELDING COLLARS AT EACH SIDE OF HANGER SUPPORT.

REV. 07/27/2018

Applicants expressly represent and warrant that all work performed and all material used in meeting Applicants' obligations herein are free from defects in workmanship and are in conformity with Southern California Edison Company's requirements. This warranty shall commence upon receipt by Applicants of the Company's final acceptance and shall expire one year from that date. Applicants agree to promptly correct to the Company's satisfaction and that of any governmental agency having jurisdiction and at Applicants' expense any breach of this warranty which may become apparent through inspection or operation of underground electric system by the Company during this warranty period.

CUSTOMER-OWNED CONDUIT MATERIAL* AND CONCRETE ENCASEMENT ARE TO BE INSTALLED IN ACCORDANCE WITH EDISON ELECTRICAL SERVICE REQUIREMENTS.
*SUBJECT TO APPROVAL BY LOCAL INSPECTION AUTHORITIES

D14: Rev. 01/85

WARNING
THE EXCAVATOR MUST TAKE ALL STEPS NECESSARY TO AVOID CONTACT WITH UNDERGROUND FACILITIES WHICH MAY RESULT IN INJURY TO PERSONS OR DAMAGE TO FACILITIES IN THE AREA. THE INDICATED LOCATIONS OF EDISON UNDERGROUND FACILITIES, AS PROVIDED, ARE BELIEVED TO BE ACCURATE, HOWEVER, THE FINAL DETERMINATION OF EXACT LOCATIONS AND THE COST OF REPAIR TO DAMAGED FACILITIES IS THE RESPONSIBILITY OF THE EXCAVATOR.

WHERE CONDUITS ARE PICKED UP OR INTERCEPTED, CONDUIT SHALL BE MANDRELLED AND PULL ROPE INSTALLED FROM TERMINAL TO TERMINAL.

NOTE:
ALL ELECTRICAL DUCTS AND STRUCTURES WILL CONFORM TO GENERAL ORDER #128 (RULES FOR CONSTRUCTION OF UNDERGROUND ELECTRICAL SUPPLY AND COMMUNICATION PRESCRIBED BY THE PUBLIC UTILITIES COMMISSION OF THE STATE OF CALIFORNIA, JANUARY 2006).

INSTALL METHOD:
[X] EDISON
[ ] APPLICANT

RUN NUMBER CALL-OUTS AS FOLLOWS:

1 - 99	MAINLINE CONDUIT
100 - 199	SERVICE CONDUIT
400 - 598	STREET LIGHT CONDUIT

D84: Rev. 2/12/08

UNDERGROUND SERVICE ALERT
Dial 811
Call USA
For Underground Locating
2 Working Days Before You Dig

PROJECT REQUIREMENTS	
EDISON EASEMENT REQUIRED	N
PWRD 88 REQUIRED	Y
PERMIT REQUIRED	Y
PERMIT TYPE: ENCROACHMENT	
OUTAGE REQUIRED	N
TRAFFIC CONTROL REQUIRED	Y
PED. TRAFFIC CONTROL REQ'D	Y
CONVEYANCE LETTER REQ'D	N

CONTRACTOR
COST PLUS [ ] FIRM [X] DEV. [ ]
INCLUDES PERM. PAVING YES [ ] NO [ ]
PERMIT NUMBER
DATE STARTED
DATE COMPLETED
INSPECTOR WILLIE RADFORD (951) 663-0321
PRECASTER CONDUIT

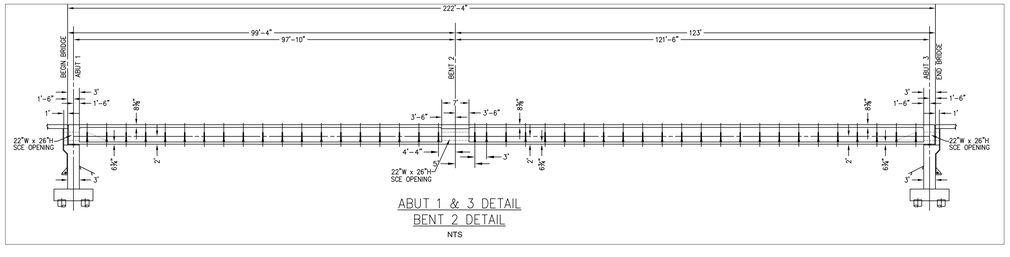

TYPICAL SECTION
NTS

ABUT 1 & 3 DETAIL
BENT 2 DETAIL
NTS

LEGEND OF CONDUIT SYMBOLS
(CONVENTIONAL U. G.)

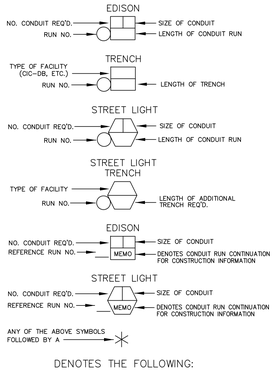

DENOTES THE FOLLOWING:

DB CONDUIT WITHOUT ENCASEMENT IS ACCEPTABLE FOR PORTIONS OF TRENCH WITH ONLY ONE OR TWO CONDUITS

SEMI-ENCASEMENT IS REQUIRED FOR PORTIONS OF TRENCH WITH ONLY THREE OR FOUR CONDUITS

FULL ENCASEMENT IS REQUIRED FOR MORE THAN FOUR CONDUITS

D18: Rev. 5/08/2006

INV. MAP #'S
645-1717-5
646-1717-5

CLOVE 12KV % MORENO
SPICE 12KV % MORENO

UNDERGROUND SERVICE ALERT
Dial 811
Call USA
For Underground Locating
2 Working Days Before You Dig

DATE	REVISION DESCRIPTION	APPROVED	DRAWN	CHECKED

DISTRICT 77-MENIFEE | PROJ. MGR. BRIAN KOLKA PHONE 805-666-9984 | PLANNER CHRIS CARBAJAL PHONE 951-212-8635 | SR NO. 2777873
FOREMAN | TRUCK NO. P/E | INVENTORY MAP NO. SEE ABOVE | THOMAS GUIDE RIV 718/C2 | GRID NO. | DESIGN NO. 1266072
CSD 140 Y ___ N ___ | BY-PASS CODE | EXISTING CHANGE TO | TLM CHECKED | RELOAD | J.P.A. NO. | ASSOCIATED DESIGN NO.
PRODUCT/SAP NO. TD1689025 | PRODUCT/SAP NO. | PRODUCT/SAP NO.

PROPOSED CONSTRUCTION (LOCATION)
PIF 277244 MORENO BEACH DR BRIDGE
MORENO BEACH DR & ROUTE 60
MORENO VALLEY

TYPE	APPROVED BY	DATE	CHECKED BY	DRAWN BY	PAX #

Southern California Edison Company

SHEET 1 OF 2 | JOB NO. 1266072_0.01

FINAL DESIGN
APPROVED FOR CONSTRUCTION

Save Date: Oct 29, 2012 - 9:04 by LAMPING

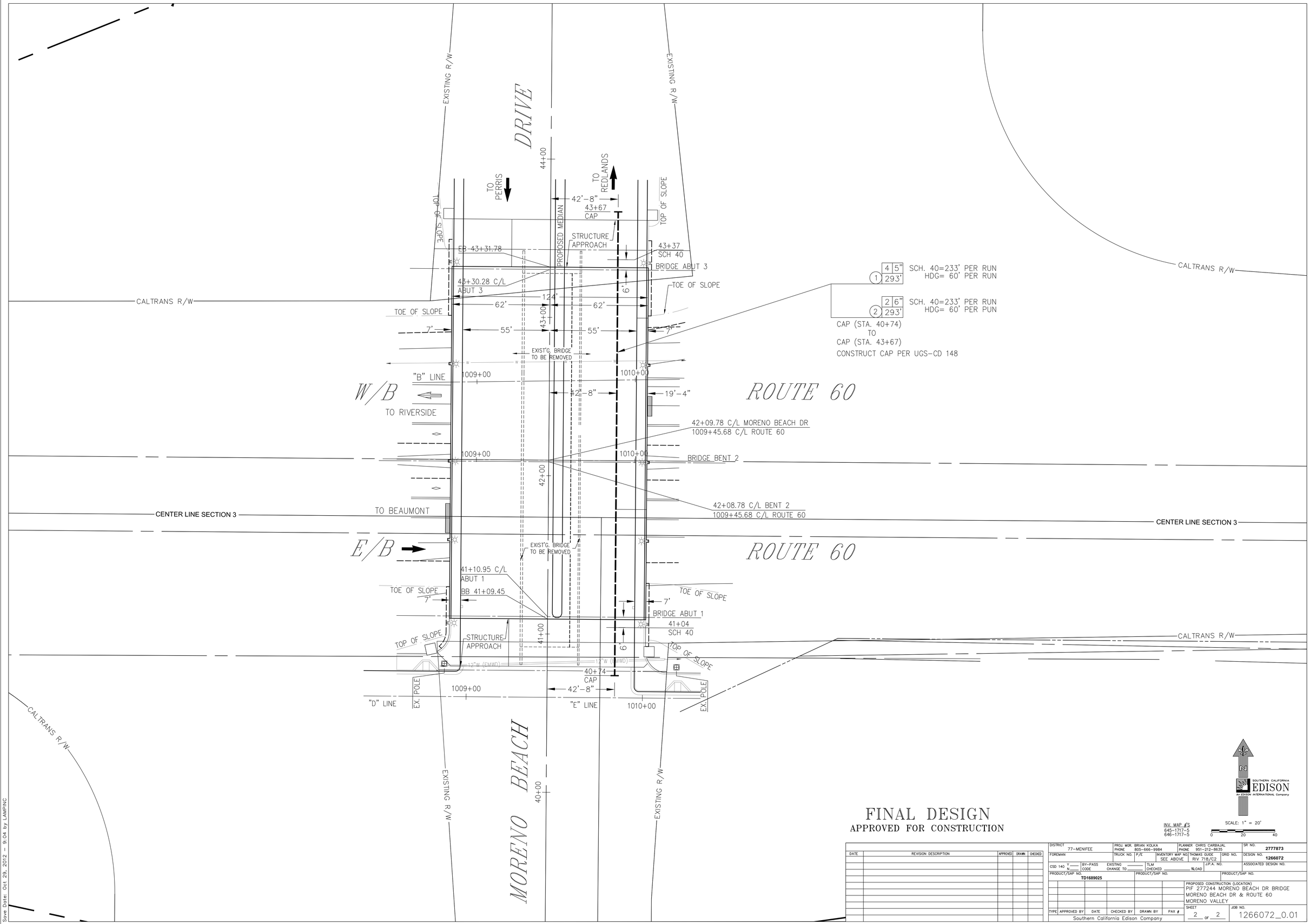

FINAL DESIGN
APPROVED FOR CONSTRUCTION

INV. MAP #'S
645-1717-5
646-1717-5

SCALE: 1" = 20'
0 20 40

SOUTHERN CALIFORNIA EDISON
An EDISON INTERNATIONAL Company

DATE	REVISION DESCRIPTION	APPROVED	DRAWN	CHECKED

DISTRICT 77-MENIFEE	PROJ. MGR. BRIAN KOLKA PHONE 805-666-9984	PLANNER CHRIS CARBAJAL PHONE 951-212-8635		SR NO. 2777873
FOREMAN	TRUCK NO.	P/E	INVENTORY MAP NO. THOMAS GUIDE SEE ABOVE RIV 718/C2	GRID NO. DESIGN NO. 1266072
CSD 140 Y ___ N ___	BY-PASS CODE	EXISTING CHANGE TO	TL.M CHECKED %LOAD	J.P.A. NO. ASSOCIATED DESIGN NO.
PRODUCT/SAP NO. TD1689025	PRODUCT/SAP NO.			PRODUCT/SAP NO.

PROPOSED CONSTRUCTION (LOCATION)
PIF 277244 MORENO BEACH DR BRIDGE
MORENO BEACH DR & ROUTE 60
MORENO VALLEY

TYPE	APPROVED BY	DATE	CHECKED BY	DRAWN BY	PAX #

Southern California Edison Company

SHEET 2 OF 2

JOB NO. 1266072_0.01

Save Date: Oct 29, 2012 - 9:04 by LAMPINC

PROJECT REQUIREMENTS (Y/N)	
EDISON EASEMENT REQUIRED	N
PWRD 88 REQUIRED	Y
UG CIVIL ONLY WORK ORDER	N
PERMIT REQUIRED	Y
PERMIT TYPE: ENROACHMENT	
OUTAGE REQUIRED	N
OUTAGE DATE: _____ TIME: _____	
TRAFFIC CONTROL REQUIRED	Y
PED. TRAFFIC CONTROL REQ'D	N
CONVEYANCE LETTER REQ'D	N
ENVIRONMENTAL CLEARANCE REQ'D	Y
CSD 140 (TLM) REQ'D	Y

D124: Rev. 02/08/18

NOTES TO CREW:
- TRUCK ACCESS GOOD
- TRAFFIC CONTROL REQUIRED

NOTES TO CIVIL:
- CIVIL TO REMOVE PULLBOX X5549412 AND BACKFILL

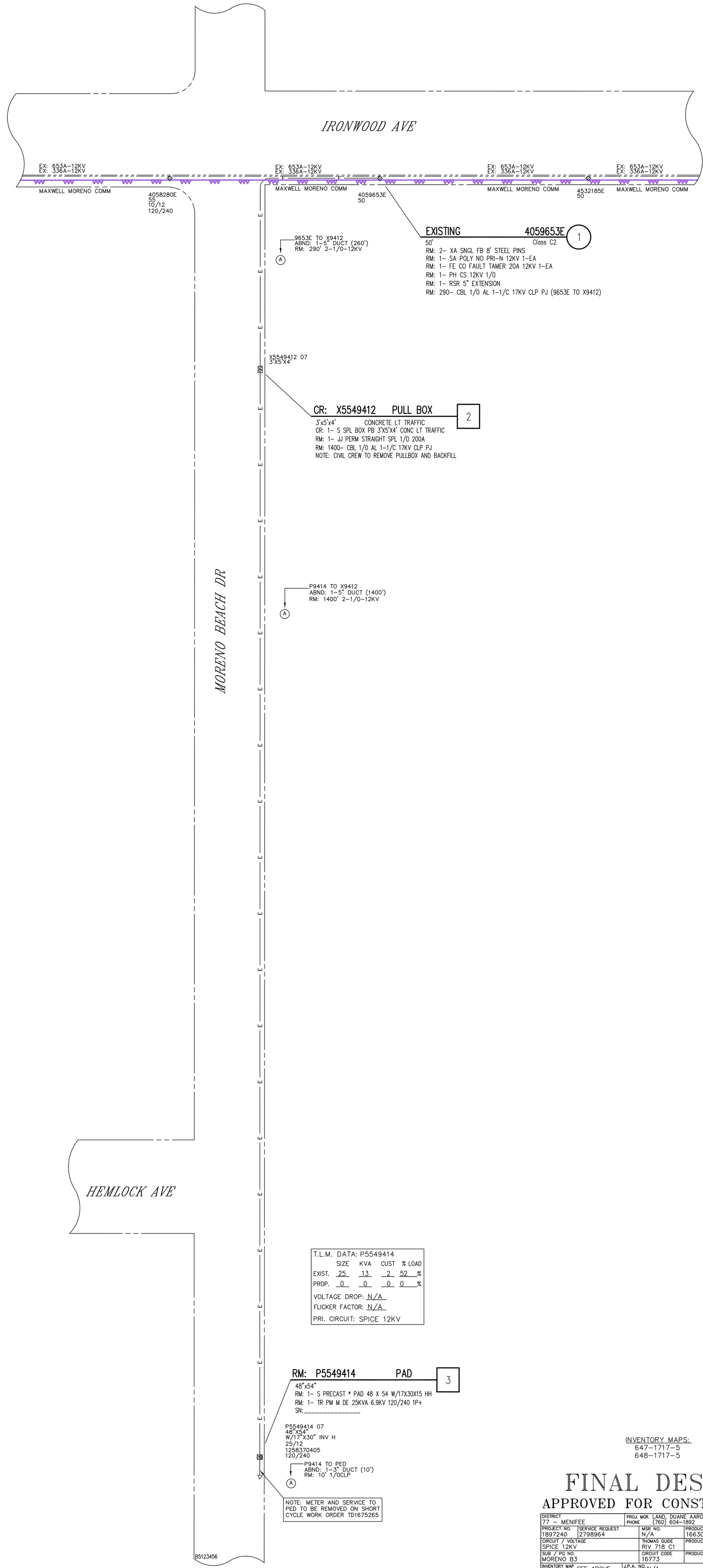

T.L.M. DATA: P5549414	SIZE	KVA	CUST	% LOAD
EXIST.	25	13	2	52 %
PROP.	0	0	0	0 %

VOLTAGE DROP: N/A
FLICKER FACTOR: N/A
PRI. CIRCUIT: SPICE 12KV

AS-IS SINGLELINE
SPICE 12KV
% MORENO B3

AS-DESIGNED SINGLELINE
SPICE 12KV
% MORENO B3

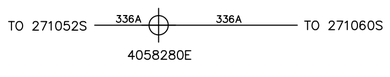

INVENTORY MAPS:
647-1717-5
648-1717-5

SOUTHERN CALIFORNIA EDISON
An EDISON INTERNATIONAL Company

FINAL DESIGN
APPROVED FOR CONSTRUCTION

SCALE: 1" = 40'
0 40 80

DISTRICT: 77 – MENIFEE	PROJ. MGR. PHONE: LAND, DUANE AARON (760) 604-1892	PLANNER PHONE: LAND, DUANE AARON (760) 604-1892	DESIGNER: EDWARDS, MITZIE LYNN
PROJECT NO.: 1897240	SERVICE REQUEST: 2798964	MSR NO.: N/A	PRODUCT-1: 1663092-RELOCATE FACILITIES – NON BILLING
CIRCUIT / VOLTAGE: SPICE 12KV		THOMAS GUIDE: RIV 718 C1	PRODUCT-2
SUB / PG NO.: MORENO B3		CIRCUIT CODE: 16773	PRODUCT-3

INVENTORY MAP: SEE ABOVE
J.P.A. NO.: N/A

TYPE	DATE	APPROVED BY	CHECKED BY	DRAWN BY	PAX #

Southern California Edison Company

PROPOSED CONSTRUCTION (LOCATION)
RELOCATE FACILITIES – NON BILLING
MORENO BEACH E/S, 447' N/O EUCALYPTUS
MORENO VALLEY, CA 92571
MARGERY LAZARUS (951) 413-3133

SHEET: 1 OF 1
DESIGN\DRWG NO.: 1244407_0.01

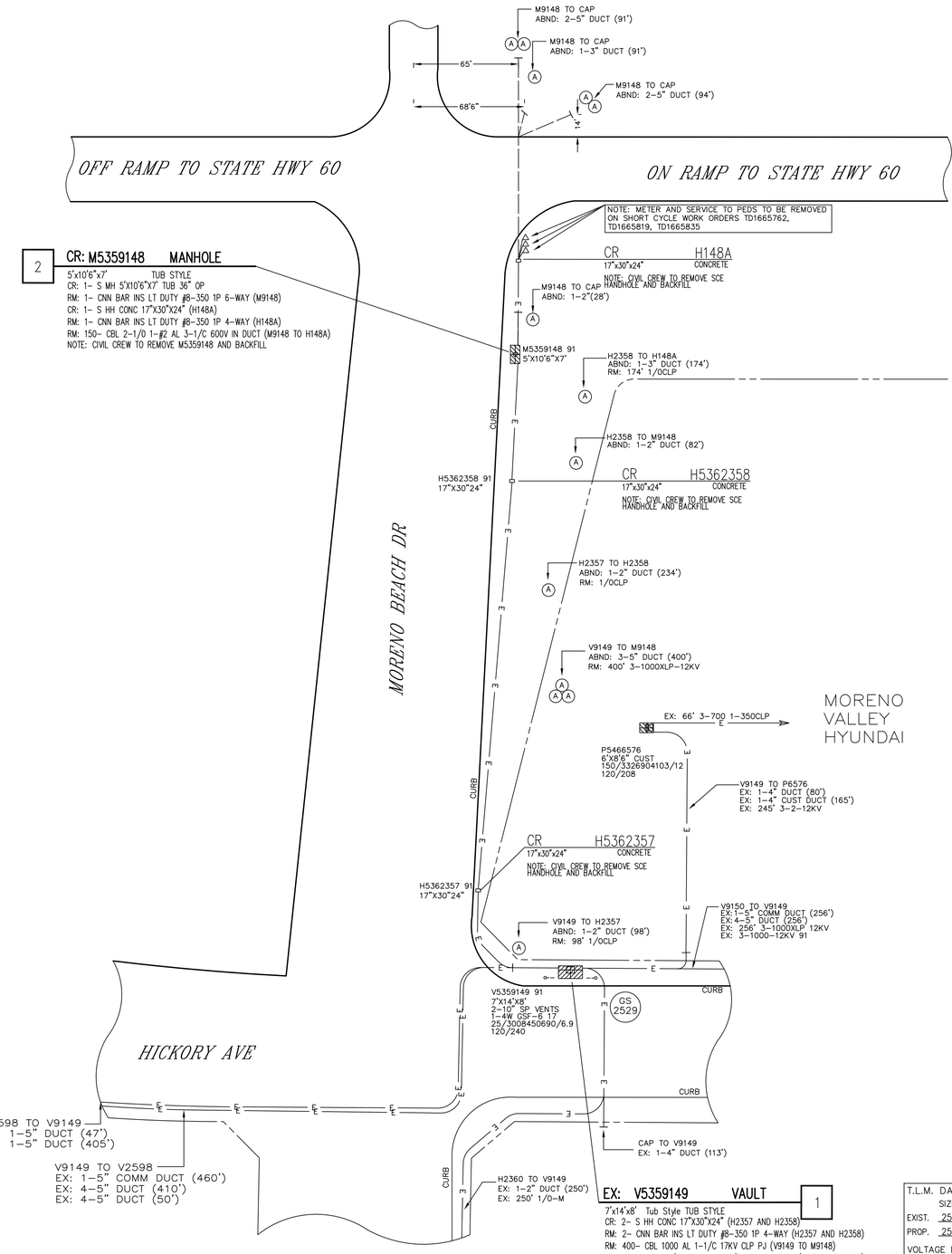

T.L.M. DATA: V5359149				
	SIZE	KVA	CUST	% LOAD
EXIST.	25	21	5	83.91%
PROP.	25	3	1	12.0 %

VOLTAGE DROP: N/A

FLICKER FACTOR: N/A

PRI. CIRCUIT: CLOVE 12KV

PROJECT REQUIREMENTS (Y/N)	
EDISON EASEMENT REQUIRED	N
PWRD 88 REQUIRED	Y
UG CIVIL ONLY WORK ORDER	N
PERMIT REQUIRED	Y
PERMIT TYPE: ENCROACHMENT	
OUTAGE REQUIRED	N
OUTAGE DATE: _____ TIME: _____	
TRAFFIC CONTROL REQUIRED	Y
PED. TRAFFIC CONTROL REQ'D	Y
CONVEYANCE LETTER REQ'D	N
ENVIRONMENTAL CLEARANCE REQ'D	Y
CSD 140 (TLM) REQ'D	N

D124: Rev. 02/08/18

NOTES TO CREW:
- TRUCK ACCESS GOOD
- SCE CREW TO REMOVE ALL CABLES AND CONNECTIONS FROM V5359149 TO M5359148 AND M5359148 TO H148A
- TRAFFIC CONTROL REQUIRED

NOTES TO CIVIL:
- CIVIL CREW TO REMOVE M5359148 AND BACKFILL
- CIVIL CREW TO REMOVE H5362357 AND H5362358 AND BACKFILL
- CIVIL CREW TO REMOVE H148A AND BACKFILL

INVENTORY MAPS:
645-1717-5
646-1717-5

SOUTHERN CALIFORNIA EDISON
An EDISON INTERNATIONAL Company

SCALE: 1" = 40'
0 40 80

FINAL DESIGN

APPROVED FOR CONSTRUCTION

DISTRICT: 77 – MENIFEE	PROJ. MGR.: LAND, DUANE AARON PHONE (760) 604-1892	PLANNER: LAND, DUANE AARON PHONE (760) 604-1892	DESIGNER: EDWARDS, MITZIE LYNN
PROJECT NO.: 1897240	SERVICE REQUEST: 2798964	MSR NO.: N/A	PRODUCT-1: 1636414-RELOCATE FACILITIES – NON BILLING
CIRCUIT / VOLTAGE: CLOVE 12KV		THOMAS GUIDE: RIV 718 C3	PRODUCT-2:
SUB / PG NO.: MORENO C3		CIRCUIT CODE: 03686	PRODUCT-3:
INVENTORY MAP: SEE ABOVE		J.P.A. NO.: N/A	PROPOSED CONSTRUCTION (LOCATION): RELOCATE FACILITIES – NON BILLING MORENO BEACH E/S, 447' N/O EUCALYPTUS MORENO VALLEY, CA 92571 MARGERY LAZARUS (951) 413-3133

TYPE	DATE	APPROVED BY	CHECKED BY	DRAWN BY	PAX #	SHEET	DESIGN\DRWG NO.
Southern California Edison Company						1 OF 1	1222822_0.01

APPENDIX D

CALTRANS ENCROACHMENT PERMIT APPLICATION

STATE OF CALIFORNIA • DEPARTMENT OF TRANSPORTATION

STANDARD ENCROACHMENT PERMIT APPLICATION

TR-0100 (REV 12/2018)

Complete ALL fields, write "N/A" if not applicable. Type or print clearly.

This application is not complete until all requirements have been approved.

Permission is requested to encroach on the State Highway right-of-way as follows:

FOR CALTRANS USE
TRACKING NO.
DIST/CO/RTE/PM
SIMPLEX STAMP
DATE OF SIMPLEX STAMP

1. COUNTY	2. ROUTE	3. POST MILE
4. ADDRESS OR STREET NAME	5. CITY	
6. CROSS STREET (Distance and direction from project site)		

7. WORK TO BE PERFORMED BY
☐ APPLICANT ☐ CONTRACTOR

8. IS THIS APPLICATION FOR THE CONTRACTOR'S (DOUBLE) PERMIT?
☐ NO ☐ YES. If "YES", provide the Parent Permit Number

9. ESTIMATE START DATE

10. ESTIMATED COMPLETION DATE

11. ESTIMATED NUMBER OF WORKING DAYS WITHIN STATE HIGHWAY RIGHT-OF-WAY

12. ESTIMATED CONSTRUCTION COSTS WITHIN STATE HIGHWAY RIGHT-OF-WAY

13. HAS THE PROJECT BEEN REVIEWED BY ANOTHER CALTRANS BRANCH?
☐ NO ☐ YES. If "YES", which branch?

14. FUNDING SOURCE(S)
☐ FEDERAL ☐ STATE ☐ LOCAL ☐ PRIVATE ☐ SB 1 (ROAD REPAIR AND ACCOUNTABILITY ACT OF 2017)

15. CALTRANS PROJECT CODE (ID)

16. APPLICANT'S REFERENCE / UTILITY WORK ORDER NUMBER

17. DESCRIBE WORK TO BE DONE WITHIN STATE HIGHWAY RIGHT-OF-WAY (in 20 lines or less)
Attach 6 complete sets of plans (folded to 8.5" x 11") and any applicable specifications, calculations, maps, traffic control plans, etc.

18 (a). PORTION OF STATE HIGHWAY RIGHT-OF-WAY WHERE WORK IS BEING PROPOSED (check all that apply)
☐ Traffic lane ☐ Shoulder ☐ Sidewalk ☐ Median ☐ At or near an intersection ☐ Mobile work
☐ Outside of the shoulder, feet from edge of pavement ☐ Other

18 (b). PROPOSED TRAFFIC CONTROL PLANS AND METHOD
☐ No traffic control needed ☐ State Standard Plans (T-Sheets) #
☐ Project specific Traffic Control Plans included ☐ To be submitted by contractor

ADA Notice For individuals with sensory disabilities, this document is available in alternate formats. For alternate format information, contact the Forms Management Unit at (916) 445-1233, TTY 711, or write to Records and Forms Management, 1120 N Street, MS-89, Sacramento, CA 95814.

Copyright 2018 California Department of Transportation. All rights reserved.

STANDARD ENCROACHMENT PERMIT APPLICATION

TR-0100 (REV 12/2018)

TRACKING NO.

19. EXCAVATION	MAX. DEPTH (in)	MIN. DEPTH (in)	AVG. WIDTH (in)	LENGTH (ft)	SURFACE TYPE (e.g. Asphalt, concrete, soil, etc.)
20. PIPES	PRODUCT BEING TRANSPORTED	CARRIER PIPE DIAMETER____(in.) MATERIAL_____		CASING PIPE DIAMETER____(in.) MATERIAL_____	

PROPOSED INSTALLATION METHOD (e.g. HDD, Bore & Jack, Open Cut, etc.) | VOLTAGE / PSIG

DOES THE PROPOSED PROJECT INVOLVE THE REPLACEMENT AND/OR ABANDONMENT OF AN EXISTING FACILITY?

☐ NO ☐ YES. If "YES", provide a description

21. IS A CITY, COUNTY OR OTHER PUBLIC AGENCY INVOLVED IN THE APPROVAL OF THIS PROJECT?

☐ YES (if "YES", check the type of project AND attach the environmental documentation and conditions of approval)

☐ COMMERCIAL DEVELOPMENT ☐ BUILDING ☐ GRADING ☐ OTHER _____

☐ CATEGORICALLY EXEMPT ☐ NEGATIVE DECLARATION ☐ ENVIRONMENTAL IMPACT REPORT ☐ OTHER _____

☐ NO (if "NO", check the category below which best describes the project AND answer questions A-K)

☐ DRIVEWAY OR ROAD APPROACH, RECONSTRUCTION, MAINTENANCE OR RESURFACING ☐ FENCE ☐ EROSION CONTROL

☐ PUBLIC UTILITY MODIFICATION, EXTENSIONS, HOOKUPS ☐ MAILBOX ☐ LANDSCAPING

☐ FLAGS, SIGNS, BANNERS, DECORATIONS, PARADES AND CELEBRATIONS ☐ OTHER _____

The following questions must be answered when a City, County or other public agency IS NOT involved in the approval of this project.

Your answers to these questions will assist Caltrans staff in identifying any physical, biological, social or economic resources that may be affected by your proposed project within State Highway right-of-way and to determine which type of environmental studies may be required to approve your application for an encroachment permit. It is the applicant's responsibility for the production of all required environmental documentation and supporting studies and in some cases this may be costly and time consuming. If possible, attach photographs of the location of the proposed project. Answer these questions to the best of your ability. Provide a description of any "YES" answers (type, name, number, etc.).

A. Will any existing vegetation and/or landscaping within State Highway right-of-way be disturbed?

B. Are there waterways (e.g. river, creek, pond, natural pool or dry streambed) adjacent to or within the limits of the proposed project?

C. Is the proposed project located within five miles of the coast line?

D. Will the proposed project generate construction noise levels greater than 86 decibels (dBA) (e.g. Jack-hammering, pile driving)?

E. Will the proposed project incorporate land from a public park, recreation area or wildlife refuge open to the public?

F. Are there any recreational trails or paths within the limits of the proposed project?

G. Will the proposed project impact any structures, buildings, rail lines or bridges within State Highway right-of-way?

H. Will the proposed project impact access to any businesses or residences?

I. Will the proposed project impact any existing public utilities or public services?

J. Will the proposed project impact any existing pedestrian facilities, such as sidewalks, crosswalks or overcrossings?

K. Will new lighting be constructed within or adjacent to State Highway right-of-way?

ADA Notice For individuals with sensory disabilities, this document is available in alternate formats. For alternate format information, contact the Forms Management Unit at (916) 445-1233, TTY 711, or write to Records and Forms Management, 1120 N Street, MS-89, Sacramento, CA 95814.

STANDARD ENCROACHMENT PERMIT APPLICATION

TR-0100 (REV 12/2018)

TRACKING NO.

22. Will the proposed project cause a substantial change in the significance of a historical resource (45 years or older), or cultural resource? ☐ YES ☐ NO (if "YES", provide a description)

23. Will the proposed project be on an existing State Highway or street where the activity involves removal of a scenic resource? (e.g. A significant tree or stand of trees, a rock outcropping or a historic building) ☐ YES ☐ NO (if "YES", provide a description)

24. Is work being done on the applicant's property in addition to State Highway right-of-way? ☐ YES ☐ NO
(If "YES", attach 6 complete sets of site and grading plans)

25. Will the proposed project require the disturbance of soil? ☐ YES ☐ NO
If "YES", estimate the area of disturbed soil within State Highway right-of-way in acres: _____
and estimate the area of disturbed soil outside State Highway right-of-way in acres: _____

26. Will the proposed project require dewatering? ☐ YES ☐ NO
If "YES", estimate Total gallons AND gallons/month. _____ (Total gallons) AND _____ (gallons/month)
SOURCE*: ☐ STORMWATER ☐ NON-STORMWATER
(*See Caltrans SWMP for definition of non-storm water discharge: http://www.dot.ca.gov/env/stormwater/)

27. How will any storm water or ground water be disposed?
☐ Storm Drain System ☐ Combined Sewer / Stormwater System ☐ Stormwater Retention Basin ☐ N/A
☐ Other (explain) _____

ADA Notice For individuals with sensory disabilities, this document is available in alternate formats. For alternate format information, contact the Forms Management Unit at (916) 445-1233, TTY 711, or write to Records and Forms Management, 1120 N Street, MS-89, Sacramento, CA 95814.

STANDARD ENCROACHMENT PERMIT APPLICATION

TR-0100 (REV 12/2018)

TRACKING NO.

READ THE FOLLOWING CLAUSES PRIOR TO SIGNING THIS ENCROACHMENT PERMIT APPLICATION.

The applicant's submission of this application to the California Department of Transportation constitutes the applicant's agreement and representation that the work or other activity contemplated by the encroachment permit application shall comply with all applicable standards, specifications, policies, requirements, conditions, and regulations of the California Department of Transportation, and the applicant understands the application may be denied if there is non-compliance with any of the above. An exception process exists and may result in approval of a non-compliant encroachment, in the discretion of the California Department of Transportation, but the exception process may require additional time to complete. The applicant understands and agrees all work or other activity contemplated by the encroachment permit application is subject to inspection and oversight by the California Department of Transportation. The applicant understands and agrees encroachment permit fees must still be paid if an application is withdrawn or denied. The applicant understands a denial may be appealed, in accordance with California Streets and Highways Code, Section 671.5, and the related regulations found in California Code of Regulations, Title 21, Division 2, Chapter 8, Article 2.

The applicant understands and agrees that immediately upon issuance of the encroachment permit the applicant is bound by, subject to, and must comply with the "Encroachment Permit General Provisions" (TR-0045), "Stormwater Special Provisions" (TR-0400) and any other applicable Special Provisions and Conditions of the encroachment permit. The "Encroachment Permit General Provisions" (TR-0045), and the Stormwater Special Provisions (TR-0400) are available at: http://www.dot.ca.gov/trafficops/ep/docs/Appendix_K_(WEB).pdf. If a paper copy is needed of the "Encroachment Permit General Provisions" (TR-0045) and/or "Stormwater Special Provisions" (TR-0400), please contact the District Office of Encroachment Permits. Their contact information is available at: http://www.dot.ca.gov/trafficops/ep/docs/Appendix_G_(WEB).pdf. The "Encroachment Permit General Provisions" (TR-0045) and any other applicable Special Provisions and Conditions will be provided as part of the encroachment permit. Information about Stormwater requirements is available at the Internet address: http://www.dot.ca.gov/hq/construc/stormwater/.

The applicant understands an encroachment permit may be denied, revoked, and/or a bond may be required, for non-payment of prior or present encroachment permit fees. An encroachment permit is not a property right and does not transfer with the property to a new owner. Each of the persons purporting to execute this application on behalf of the applicant and/or on behalf of the applicant's authorized agent or engineer represents and warrants such person has full and complete legal authority to do so and to thereby bind applicant to the terms and conditions herein and to the terms and/or conditions of the encroachment permit. Applicant understands and agrees this application may be executed in one or more counterparts, each of which shall be deemed an original, but all of which together shall constitute one and the same instrument. Executed copies of this application and/or its counterparts may be reproduced and/or exchanged by copy machine, mailing, facsimile, or electronic means (such as e-mail), and such copies shall be deemed to be effective as originals.

28. NAME OF APPLICANT (Project or Property Owner or Organization)

ADDRESS OF APPLICANT (Include City, State and Zip Code)

E-MAIL ADDRESS	PHONE NUMBER	FAX NUMBER

29. NAME OF AUTHORIZED AGENT / ENGINEER
(A "Letter of Authorization" is required if different from #28)

IS A LETTER OF AUTHORIZATION ATTACHED?
☐ YES ☐ NO

ADDRESS OF AUTHORIZED AGENT / ENGINEER (Include City, State and Zip Code)

E-MAIL ADDRESS	PHONE NUMBER	FAX NUMBER

30. NAME OF BILLING CONTACT (Same as #28 ☐ Same as #29 ☐)

BILLING ADDRESS WHERE INVOICE(S) IS / ARE TO BE MAILED (Include City, State and Zip Code)

E-MAIL ADDRESS	PHONE NUMBER	FAX NUMBER

* I hereby certify under penalty of perjury under the laws of the State of California that the information in this application and any document submitted with or in support of this application are true and correct to the best of my knowledge and belief, and that copies of any documents submitted with or in support of this application are true and correct copies of unaltered original documents. I further understand that if I have provided information that is false, intentionally incomplete, or misleading I may be charged with a crime and subjected to fine or imprisonment, or both fine and imprisonment. (Penal Code Section 72)

31. SIGNATURE OF APPLICANT OR AUTHORIZED AGENT*	32. PRINT OR TYPE NAME	
33. TITLE		34. DATE

ADA Notice For individuals with sensory disabilities, this document is available in alternate formats. For alternate format information, contact the Forms Management Unit at (916) 445-1233, TTY 711, or write to Records and Forms Management, 1120 N Street, MS-89, Sacramento, CA 95814.

STATE OF CALIFORNIA • DEPARTMENT OF TRANSPORTATION

STANDARD ENCROACHMENT PERMIT APPLICATION

TR-0100 (REV 12/2018)

INSTRUCTIONS

Complete ALL fields, write "N/A" if not applicable. Type or print clearly. All dimensions must be in U.S. Customary (English) units.

Print your application single sided and submit all of the required attachments (See Section VII A&B of the "Encroachment Permit Application Guide Booklet" found at: http://www.dot.ca.gov/trafficops/ep/docs/EP_Application_Guide_Booklet.pdf).

1. County (e.g. Fresno, San Francisco, Los Angeles, etc.)
2. State Highway Route Number (e.g. I-5, SR-99, etc.)
3. Highway Postmile: (location of work, see https://postmile.dot.ca.gov/) If unable to determine, contact the appropriate District Encroachment Permits Office for assistance at: http://www.dot.ca.gov/trafficops/ep/docs/Appendix_G_(WEB).pdf
4. Address of project site (if the property has a physical address with a Number and Street/Road Name)
5. City (e.g. Sacramento, Redding, Irvine, etc.)
6. Distance and the direction from the nearest cross street to the project site (e.g. 500 ft. north of "C" Street).
7. Indicate whether the work will be performed by the applicant (your own forces) or by a contractor.
8. Indicate if you are applying for a "Contractor's (Double) Permit" and provide the "Parent Permit Number".
9. Estimated start date for the proposed work. (Allow a minimum of 60 calendar days from the submittal date of your application for processing)
10. Estimated completion date for the proposed work.
11. Estimated number of working days within State Highway right-of-way.
12. Estimated construction costs for all work to be done within State Highway right-of-way.
13. Has another Caltrans' branch seen or reviewed your project? Which branch? (e.g. Design, Project Management, Right-of-Way, Environmental, etc.)
14. Identify funding source(s) for the proposed work.
15. Caltrans' Project Code (ID) if this is a State project, capital project, or joint venture project.
16. Your company's reference number or utility work order number for this project.
17. Describe the proposed work to be done entirely. If applicable, attach six (6) complete sets of FOLDED plans (folded 8-½" X 11") and any applicable specifications, calculations, maps, etc.
18. (a) Identify portion(s) of State right-of-way where work will occur and (b) proposed traffic control plans to be used if any.
19. Maximum and minimum depth, average width, and length of the excavation area. Existing surface type (e.g. Asphalt, concrete, soil, etc.)
20. Product being transported (e.g. water, natural gas, etc.) Carrier pipe, diameter (inches) and material (e.g. Steel, HDPE, etc.) Casing pipe (if any), diameter and material Proposed installation method, Voltage of electrical current or pressure of liquid or gas. Replacement and/or abandonment of an existing facility (e.g. Abandoning pipe and filling it with two-sack slurry cement)
21. Check "YES", if you are getting a permit or approval from another agency (City, County, etc.), and an environmental determination has been made. Then check the Categorically Exempt, Negative Declaration, Environmental Impact Report box or Other if one has been prepared. Attach a copy of the approved document and a copy of the Notice of Determination. Skip questions A-K.

    If you checked "NO", check the box of the appropriate type of work to be done,or check "other" and fill in the type of work to be done. Also answer questions A-K.
22. A Historical Resource includes, but is not limited to, any object, building, structure, site, area, place, record, or manuscript that has historical or archaeological significance, or significance in the architectural, engineering, scientific, economic, agricultural, educational, social, political, military, or cultural annals of California.
23. In this context a Scenic Resource includes, but is not limited to, trees that display outstanding features of form or age; unique, massive rock formations; historic buildings that are rare examples of their period, style, design, or which have special architectural features and details of importance.
24. Is there any work being done on the applicant's property?
25. Indicate if the proposed project will require the disturbance of soil. If "YES," estimate the area within AND outside of State Highway right-of-way in acres.
26. Indicate if the proposed project will require dewatering. If "YES," estimate volume in total gallons AND gallons per month. Also indicate the source: Stormwater or Non-Stormwater (see Caltrans Stormwater Management Plan for definitions of non-stormwater discharge at: http://www.dot.ca.gov/hq/env/stormwater).
27. Indicate how any stormwater or ground water will be disposed of from or near the limits of the proposed project.
28. Name of the applicant or organization applying for the permit. List the mailing address, e-mail address, phone and fax numbers.
29. Name of the authorized agent or engineer acting on behalf of the applicant or organization. Attach a letter of authorization signed by the applicant or organization. List the mailing address, e-mail address, phone and fax numbers.
30. Name of the billing contact. List the mailing address where invoices are to be mailed, email address, phone and fax numbers.
31. Signature of the applicant or applicant's authorized agent.
32. Name of the applicant or applicant's authorized agent.
33. Title (owner, president, etc.) of the applicant or applicant's authorized agent.
34. Date of the signature.

ADA Notice For individuals with sensory disabilities, this document is available in alternate formats. For alternate format information, contact the Forms Management Unit at (916) 445-1233, TTY 711, or write to Records and Forms Management, 1120 N Street, MS-89, Sacramento, CA 95814.

APPENDIX E

ENVIRONMENTAL COMMITMENT RECORD

Permit Type	Agency	Date Submitted	Date Received	Expiration	Fee	Notes	Permit Requirement Completed Name	Date
401 – K-1 Line	RWQCB	10/28/2019	12/7/20	3/18/22				
401 – Interchange	RWQCB	10/28/2019	1/7/21	3/18/22				
1602	CDFW	10/28/2019	10/13/20	9/10/25				
404	USACE	10/28/2019	2/26/20	3/18/22				
NPDES Permit, Statewide Storm Water Permit and Waste Discharge Requirements for the State of California, Department of Transportation Order Number 2012-0011-DWQ, NPDES No. CAS00003	RWQCB	TBD						
NPDES General Permit, Waste Discharge Requirements for Discharges of Storm Water Runoff Associated with Construction Activities (Order No.2009-0009-DWQ-NPDES No. CAS000002	RWQCB	TBD						

Date of ECR: 1/12021
Date: June 29, 2007

ENVIRONMENTAL COMMITMENTS RECORD
SR-60/Moreno Beach Interchange Improvement
Project Phase 2

08-RIV-60
PM 18.9 / 19.8

Project Phase:
☐ PA/ED (*DED/FED*)
☒ PS&E Submittal_100_ %
☐ Construction

EA 08-32303
PN 0812000059
Generalist: Hannah Duarte
ECL: TBD

Avoidance, Minimization, and/or Mitigation Measures	Page # in Env. Doc. Or Permit	Environmental Analysis Source (Technical Study, Environmental Document, and/or Technical Discipline)	Responsible for Development and/or Implementation of Measure	Timing/ Phase	If applicable, corresponding construction provision: (standard, special, non-standard)	Action(s) Taken to Implement Measure/if checked No, add Explanation here	PS&E Task Completed Date / Initials	Construction Task Completed Date / Initials	Environmental Compliance YES	NO
CULTURAL RESOURCES										
CUL-1 Stop work if buried cultural resources are encountered during construction until a qualified archaeologist can evaluate the nature and significance of the find. In the event that human remains, including isolated, disarticulated bones or fragments, are discovered during any construction-related activity,	24	Historic Property Survey Report (HPSR)	RE	Construction						

Date of ECR: 1/12021
Date: June 29, 2007

Project Phase:
☐ PA/ED (*DED/FED*)
☒ PS&E Submittal_100_ %
☐ Construction

ENVIRONMENTAL COMMITMENTS RECORD
SR-60/Moreno Beach Interchange Improvement
Project Phase 2

08-RIV-60
PM 18.9 / 19.8

EA 08-32303
PN 0812000059
Generalist: Hannah Duarte
ECL: TBD

Avoidance, Minimization, and/or Mitigation Measures	Page # in Env. Doc. Or Permit	Environmental Analysis Source (Technical Study, Environmental Document, and/or Technical Discipline)	Responsible for Development and/or Implementation of Measure	Timing/ Phase	If applicable, corresponding construction provision: (standard, special, non-standard)	Action(s) Taken to Implement Measure/if checked No, add Explanation here	PS&E Task Completed	Construction Task Completed	Environmental Compliance	
							Date / Initials	Date / Initials	YES	NO
cease in the vicinity of the human remains. Contact the District Environmental Branch Chief (DEBC), Olufemi Odufalu, PE ([909] 383-6933) or District Native American Coordinator (DNAC), Gary Jones ([909] 383-7505) if any cultural elements or human remains are discovered. An additional survey will be required if the project changes to include areas not previously surveyed for cultural resources.										
VISUAL/AESTHETICS										
VIS-1 **Light and Glare Analysis** - Lighting will be designed in a manner that minimizes potential glare impacts to residential communities in the project vicinity. - Lighting will be designed to face inward towards the streets and overcrossings. Light spillover effects will be minimized by placement of glare shields on the light fixtures.	14	Visual Impact Assessment Memorandum	RE	Design						
WATER QUALITY AND STORM RUNOFF										

Date of ECR: 1/12021
Date: June 29, 2007

Project Phase:
☐ PA/ED (*DED/FED*)
☒ PS&E Submittal_100_ %
☐ Construction

ENVIRONMENTAL COMMITMENTS RECORD
SR-60/Moreno Beach Interchange Improvement
Project Phase 2

08-RIV-60
PM 18.9 / 19.8

EA 08-32303
PN 0812000059
Generalist: Hannah Duarte
ECL: TBD

Avoidance, Minimization, and/or Mitigation Measures	Page # in Env. Doc. Or Permit	Environmental Analysis Source (Technical Study, Environmental Document, and/or Technical Discipline)	Responsible for Development and/or Implementation of Measure	Timing/ Phase	If applicable, corresponding construction provision: (standard, special, non-standard)	Action(s) Taken to Implement Measure/if checked No, add Explanation here	PS&E Task Completed	Construction Task Completed	Environmental Compliance	
							Date / Initials	Date / Initials	YES	NO
SW-1 **Implement Storm Water Pollution Prevention Plan (SWPPP/Water Pollution Control (WPC)** All applicable Best Management Practices (BMPs) shall be implemented in order to prevent impacts to the drainages in the project area.	32	Water Quality/ Floodplain Memorandum	Resident Engineer (RE)/RE-City of Moreno Valley	Construction						
SW-2 Use on all projects: **Notification of Construction (NOC)** - Project Engineer files NOC with Regional Water Quality Control Board (RWQCB) at least 30 days prior to start of construction. - Resident Engineer (RE) files amended NOC with RWQCB following start of construction. - RE files NOCC with RWQCB at completion of construction.	32	Water Quality/ Floodplain Memorandum	RE/City of Moreno Valley	Pre-construction/ Construction Completion						
~~**SW-3**~~ ~~Use on all projects:~~ ~~**Construction Dewatering**~~ ~~Notify RWQCB if dewatering is required on the project.~~	~~32~~	~~Water Quality/ Floodplain Memorandum~~	~~RE~~	~~Construction~~		No dewatering will be required for Phase 2 of the SR-60/Moreno Beach Interchange Improvement Project - removed 4/24/20				

Date of ECR: 1/12021
Date: June 29, 2007

Project Phase:
☐ PA/ED (*DED/FED*)
☒ PS&E Submittal_100_ %
☐ Construction

ENVIRONMENTAL COMMITMENTS RECORD
SR-60/Moreno Beach Interchange Improvement
Project Phase 2

08-RIV-60
PM 18.9 / 19.8

EA 08-32303
PN 0812000059
Generalist: Hannah Duarte
ECL: TBD

Avoidance, Minimization, and/or Mitigation Measures	Page # in Env. Doc. Or Permit	Environmental Analysis Source (Technical Study, Environmental Document, and/or Technical Discipline)	Responsible for Development and/or Implementation of Measure	Timing/ Phase	If applicable, corresponding construction provision: (standard, special, non-standard)	Action(s) Taken to Implement Measure/if checked No, add Explanation here	PS&E Task Completed	Construction Task Completed	Environmental Compliance	
							Date / Initials	Date / Initials	YES	NO
NOISE AND VIBRATION										
~~**NOI-1**~~ ~~**Soundwall Construction**~~ ~~Soundwalls will be constructed at noise sensitive receptors where they meet the feasibility and reasonableness criteria.~~	~~37~~	~~Noise Study Report (NSR)~~	~~RE~~	~~Pre-Construction~~		The only identified soundwall (S962) was constructed as part of the SR 60/Nason Street Overcrossing Improvements Project in 2010. There are no additional proposed soundwalls for Phase 2 of the SR-60/Moreno Beach Interchange Improvement Project. Therefore, this measure is no longer applicable - removed 4/24/20				
NOI-2 **Temporary Construction Noise** - Noise from construction activities will conform to the Caltrans provisions outlined in Sections 7 and 42 of the Standard Specifications and Special Provisions (Caltrans, 1999). The Special Provisions typically applicable are quoted, in part, as follows: - The noise level from Contractor's operations, between the hours of 0900 and 1800, shall not exceed 86 dBA	37	Noise Study Report (NSR)	RE	Construction/ Post-Construction						

Avoidance, Minimization, and/or Mitigation Measures	Page # in Env. Doc. Or Permit	Environmental Analysis Source (Technical Study, Environmental Document, and/or Technical Discipline)	Responsible for Development and/or Implementation of Measure	Timing/ Phase	If applicable, corresponding construction provision: (standard, special, non-standard)	Action(s) Taken to Implement Measure/if checked No, add Explanation here	PS&E Task Completed	Construction Task Completed	Environmental Compliance	
							Date / Initials	Date / Initials	YES	NO
(A-weighted decibels) at a distance of 15 meters (50 feet). This requirement in no way relieves the Contractor from responsibilities for complying with local ordinances regulating noise levels. - Noise level requirements shall apply to all equipment on the job or related to the job, including but not limited to trucks, transit mixers, or transient equipment that may or not be owned by the Contractor. The use of loud sound signals shall be avoided in favor of light warnings except those required by safety laws for the protection of personnel. - Each internal combustion engine, used for any purpose on the job or related to the job, shall be equipped with a muffler of a type recommended by the manufacturer. No internal combustion engine shall operate without a muffler.									
HAZARDOUS WASTE / MATERIALS										

Date of ECR: 1/12021
Date: June 29, 2007

Project Phase:
☐ PA/ED (*DED/FED*)
☒ PS&E Submittal_100_ %
☐ Construction

ENVIRONMENTAL COMMITMENTS RECORD
SR-60/Moreno Beach Interchange Improvement
Project Phase 2

08-RIV-60
PM 18.9 / 19.8

EA 08-32303
PN 0812000059
Generalist: Hannah Duarte
ECL: TBD

Avoidance, Minimization, and/or Mitigation Measures	Page # in Env. Doc. Or Permit	Environmental Analysis Source (Technical Study, Environmental Document, and/or Technical Discipline)	Responsible for Development and/or Implementation of Measure	Timing/ Phase	If applicable, corresponding construction provision: (standard, special, non-standard)	Action(s) Taken to Implement Measure/if checked No, add Explanation here	PS&E Task Completed	Construction Task Completed	Environmental Compliance	
							Date / Initials	Date / Initials	YES	NO
HW-1 **Workplan for Removal/Disposal of Yellow Thermoplastic Residue** If it is determined that the project would require the removal or disturbance of any existing yellow thermoplastic traffic lane striping in the project area, then Caltrans standard measures shall be implemented to ensure the proper removal, storage, and disposal of the material, if required.	29	Initial Site Assessment (ISA)	Contractor/RE	Pre-Construction/ Construction	14-11.12					
HW-2 **Lead Compliance Plan** - The Contractor shall prepare a project-specific Lead Compliance Plan to prevent or minimize worker exposure to lead. Attention is directed to Title 8, California Code of Regulations (CCR), Section 1532.1, "Lead" for specific Cal-OSHA requirements when working with lead. - The Lead Compliance Plan shall contain the elements listed in Title 8, CCR, Section 1532.1(e)(2)(B). Before submission to the Engineer, the Lead Compliance Plan shall be approved by an	29	Initial Site Assessment (ISA)	Contractor/RE	Pre-Construction/ Construction						

Avoidance, Minimization, and/or Mitigation Measures	Page # in Env. Doc. Or Permit	Environmental Analysis Source (Technical Study, Environmental Document, and/or Technical Discipline)	Responsible for Development and/or Implementation of Measure	Timing/ Phase	If applicable, corresponding construction provision: (standard, special, non-standard)	Action(s) Taken to Implement Measure/if checked No, add Explanation here	PS&E Task Completed	Construction Task Completed	Environmental Compliance	
							Date / Initials	Date / Initials	YES	NO
Industrial Hygienist certified in Comprehensive Practice by the American Board of Industrial Hygiene.										
HW-3 **Asbestos Containing Material (ACM) Management Protocol** - All identified ACM (gray gaskets) comprising approximately 21 square feet <u>and asbestos conduits, which may be present under the sidewalk of the Moreno Beach Drive overcrossing,</u> must be removed manually prior to demolition/ renovation of the existing Moreno Beach Drive bridge over the SR-60 freeway. ~~- All identified ACM (gray gaskets) comprising approximately 25 square feet must be removed manually prior to demolition/renovation of the existing Nason Street bridge over the SR-60 freeway.~~ - ACM management protocols will be included in the construction specifications.	29	Initial Site Assessment (ISA)	RE/RE	Pre-Construction/ Construction	14-11.16	Demolition/construction of the Nason Street bridge has been completed; therefore, that portion of this measure is no longer required (4/24/20).				

ENVIRONMENTAL COMMITMENTS RECORD
SR-60/Moreno Beach Interchange Improvement
Project Phase 2

Avoidance, Minimization, and/or Mitigation Measures	Page # in Env. Doc. Or Permit	Environmental Analysis Source (Technical Study, Environmental Document, and/or Technical Discipline)	Responsible for Development and/or Implementation of Measure	Timing/ Phase	If applicable, corresponding construction provision: (standard, special, non-standard)	Action(s) Taken to Implement Measure/if checked No, add Explanation here	PS&E Task Completed	Construction Task Completed	Environmental Compliance	
							Date / Initials	Date / Initials	YES	NO
- ACM removal shall conform to Cal-OSHA requirements in Title 8 Section 1529 and 341. - Packaging, storage, transporting, and disposing of ACM shall conform to Cal-OSHA Title 22, Division 4, Chapter 20 as stated in the construction specifications.										
HW-4 **Pesticides** Prior to the initiation of construction activities, surface and near-surface soil samples shall be collected in excavation areas and analyzed for pesticides. If pesticides are detected, appropriate soil handling and disposal options shall be implemented in accordance with regulatory requirements.	29	ISA	RE/RE	Construction						
HW-5 **Notice of Demolition** The contractor shall file a Notice of Demolition with the SCAQMD at least ten (10) days before the bridge demolition begins.	30	ISA	Contractor/RE	Pre-Construction	14-9.02					
AIR QUALITY										

Date of ECR: 1/12021
Date: June 29, 2007

Project Phase:
☐ PA/ED (*DED/FED*)
☒ PS&E Submittal_100_ %
☐ Construction

ENVIRONMENTAL COMMITMENTS RECORD
SR-60/Moreno Beach Interchange Improvement
Project Phase 2

08-RIV-60
PM 18.9 / 19.8

EA 08-32303
PN 0812000059
Generalist: Hannah Duarte
ECL: TBD

Avoidance, Minimization, and/or Mitigation Measures	Page # in Env. Doc. Or Permit	Environmental Analysis Source (Technical Study, Environmental Document, and/or Technical Discipline)	Responsible for Development and/or Implementation of Measure	Timing/ Phase	If applicable, corresponding construction provision: (standard, special, non-standard)	Action(s) Taken to Implement Measure/if checked No, add Explanation here	PS&E Task Completed	Construction Task Completed	Environmental Compliance	
							Date / Initials	Date / Initials	YES	NO
AQ-1 Use on all projects. Select appropriate regulation. **Fugitive Dust** Contractor shall abide with applicable South Coast Air Quality Management District (SCAQMD) 403 Rules. Contractor must: - Submit a Large Operation Notification and keep a copy in field. - Install fugitive dust project signage at each project entrance. - Designate a dust control supervisor who will be available and on the project site within 30 minutes of being called, 24/7. - Contractor implement Section 10-5 (Dust Control) of recent Caltrans Standard Specifications for Construction (2018).	17	Air Quality Technical Study (AQTS)	Contractor/RE	Construction						
AQ-2 Use on AC overlay projects and projects with aggregate batch plants. Check with PE to determine which regulations are applicable. **AQMD Source Specific Standards** Contractor shall abide with all applicable AQMD rules.	17	Air Quality Technical Study (AQTS)	Contractor/RE	Construction						

Date of ECR: 1/12021
Date: June 29, 2007

Project Phase:
☐ PA/ED (*DED/FED*)
☒ PS&E Submittal_100_ %
☐ Construction

ENVIRONMENTAL COMMITMENTS RECORD
SR-60/Moreno Beach Interchange Improvement
Project Phase 2

08-RIV-60
PM 18.9 / 19.8

EA 08-32303
PN 0812000059
Generalist: Hannah Duarte
ECL: TBD

Avoidance, Minimization, and/or Mitigation Measures	Page # in Env. Doc. Or Permit	Environmental Analysis Source (Technical Study, Environmental Document, and/or Technical Discipline)	Responsible for Development and/or Implementation of Measure	Timing/ Phase	If applicable, corresponding construction provision: (standard, special, non-standard)	Action(s) Taken to Implement Measure/if checked No, add Explanation here	PS&E Task Completed	Construction Task Completed	Environmental Compliance	
							Date / Initials	Date / Initials	YES	NO
AQ-3 **Construction Emission Control** Contractor shall comply with all applicable air pollution control rules, regulations, ordinances, and statutes, including the following measures, when feasible: - Use low-emission mobile construction equipment. - Maintain construction equipment engines by keeping them tuned. - Use low-sulfur fuel for stationary construction equipment, as required by SCAQMD Rules 431.1 and 431.2. - Utilize existing power sources (i.e., power poles) when feasible, to minimize the use of higher-polluting gas or diesel generators. - Configure construction parking to minimize traffic interference. - Minimize obstruction of through-traffic lanes. Minimize lane closures on existing streets.	17	AQMD	Contractor/ RE-City of Moreno Valley	Pre-Construction/ Construction						

Date of ECR: 1/12021
Date: June 29, 2007

Project Phase:
☐ PA/ED (*DED/FED*)
☒ PS&E Submittal_100_ %
☐ Construction

ENVIRONMENTAL COMMITMENTS RECORD
SR-60/Moreno Beach Interchange Improvement
Project Phase 2

08-RIV-60
PM 18.9 / 19.8

EA 08-32303
PN 0812000059
Generalist: Hannah Duarte
ECL: TBD

Avoidance, Minimization, and/or Mitigation Measures	Page # in Env. Doc. Or Permit	Environmental Analysis Source (Technical Study, Environmental Document, and/or Technical Discipline)	Responsible for Development and/or Implementation of Measure	Timing/ Phase	If applicable, corresponding construction provision: (standard, special, non-standard)	Action(s) Taken to Implement Measure/if checked No, add Explanation here	PS&E Task Completed	Construction Task Completed	Environmental Compliance	
							Date / Initials	Date / Initials	YES	NO
- Schedule construction operations affecting traffic for off-peak hours. - Develop a traffic plan to minimize traffic-flow interference from construction activities. The plan may include advance public notice of routing, use of public transportation, and satellite parking areas with a shuttle service. - Develop a "Diesel Fuel Reduction Plan" that identifies the actions to be taken to reduce fuel emissions during construction activities, inclusive of grading and excavation activities. Reductions in diesel fuel can be achieved by measures including, but not limited to, the following: use of alternative energy sources, such as compressed natural gas or liquefied petroleum gas, in mobile equipment and vehicles; use of "retrofit technology," including diesel particulate traps, on existing diesel engines and vehicles;									

Date of ECR: 1/12021
Date: June 29, 2007

Project Phase:
☐ PA/ED (*DED/FED*)
☒ PS&E Submittal_100_ %
☐ Construction

ENVIRONMENTAL COMMITMENTS RECORD
SR-60/Moreno Beach Interchange Improvement
Project Phase 2

08-RIV-60
PM 18.9 / 19.8

EA 08-32303
PN 0812000059
Generalist: Hannah Duarte
ECL: TBD

Avoidance, Minimization, and/or Mitigation Measures	Page # in Env. Doc. Or Permit	Environmental Analysis Source (Technical Study, Environmental Document, and/or Technical Discipline)	Responsible for Development and/or Implementation of Measure	Timing/ Phase	If applicable, corresponding construction provision: (standard, special, non-standard)	Action(s) Taken to Implement Measure/if checked No, add Explanation here	PS&E Task Completed	Construction Task Completed	Environmental Compliance	
							Date / Initials	Date / Initials	YES	NO
and other appropriate measures. Prior to the issuance of a grading permit, the Diesel Fuel Reduction Plan shall be filed with the City of Moreno Valley Planning Division.										
BIOLOGICAL RESOURCES										
BIO-1 **Flagging** Prior to construction, the limits of grading shall be delineated and staked clearly, to avoid unnecessary losses of any sensitive habitats. This is especially important where grading will occur in drainages and Riversidean sage scrub~~, and at Nason Street, where fill of SR-60 eastbound on- and off-ramps will be accomplished adjacent to jurisdictional areas~~.	21	Natural Environment Study (NES)	RE/RE-City of Moreno Valley	Pre-Construction	14-1.02	Demolition/construction around SR 60/ Nason Street interchange has been completed; therefore, that portion of this measure is no longer required (4/24/20				
BIO-2 **Nesting Raptors and Migratory Birds** - Prior to the removal of any eucalyptus trees, surveys will be conducted by a qualified biologist to determine the presence of active raptor nests <u>and other bird nests, as well as roosting bats</u>.	21	Natural Environment Study (NES)	City of Moreno Valley/RE-City of Moreno Valley	Pre-Construction/ Construction						

Date of ECR: 1/12021
Date: June 29, 2007

Project Phase:
☐ PA/ED (*DED/FED*)
☒ PS&E Submittal_100_ %
☐ Construction

ENVIRONMENTAL COMMITMENTS RECORD
SR-60/Moreno Beach Interchange Improvement
Project Phase 2

08-RIV-60
PM 18.9 / 19.8

EA 08-32303
PN 0812000059
Generalist: Hannah Duarte
ECL: TBD

Avoidance, Minimization, and/or Mitigation Measures	Page # in Env. Doc. Or Permit	Environmental Analysis Source (Technical Study, Environmental Document, and/or Technical Discipline)	Responsible for Development and/or Implementation of Measure	Timing/ Phase	If applicable, corresponding construction provision: (standard, special, non-standard)	Action(s) Taken to Implement Measure/if checked No, add Explanation here	PS&E Task Completed	Construction Task Completed	Environmental Compliance	
							Date / Initials	Date / Initials	YES	NO
- Construction work will be avoided during peak breeding and nesting season (February 1 through September 1). - If construction cannot be avoided during the peak nesting season, then preconstruction surveys shall be performed by a qualified biologist approximately four weeks prior to any clearing and grubbing disturbance. - Any active raptor nests will be mapped on construction plans. A buffer zone of 350 feet must be established around any active nest to minimize disturbance. - Once the young have fledged and the nest is no longer in use, construction may proceed within the buffer zone.										
BIO-3 **Invasive Species** A qualified biologist shall be contacted on any landscaping provided and shall be in compliance with Executive Order 13112, to prevent the introduction of invasive species and provide for their control and to minimize the economic,	21	Natural Environment Study (NES)	RE	Design/ Construction/ Post-Construction						

Avoidance, Minimization, and/or Mitigation Measures	Page # in Env. Doc. Or Permit	Environmental Analysis Source (Technical Study, Environmental Document, and/or Technical Discipline)	Responsible for Development and/or Implementation of Measure	Timing/ Phase	If applicable, corresponding construction provision: (standard, special, non-standard)	Action(s) Taken to Implement Measure/if checked No, add Explanation here	PS&E Task Completed	Construction Task Completed	Environmental Compliance	
							Date / Initials	Date / Initials	YES	NO
ecological, and human health impacts that invasive species cause. Invasive plant species will not be used.										
BIO-4 For impacts to three natural drainages, waters of the State (defined as riparian/ riverine areas) and waters of the U.S., mitigation is required. However, the details of the actual mitigation approach (onsite and/or offsite) will be subject to discussions with the California Department of Fish and Wildlife (CDFW), RWQCB, and United States Army Corps of Engineers (USACE) during the permitting process. Revise Commitments to CDFW, RWQCB, and USACE.	22	Natural Environment Study (NES)	City	Design Phase						
BIO-5 A Burrowing Owl Site Assessment is required. It must be completed and submitted for approval to USFWS and CDFW during the design phase of the project. A burrowing owl survey will be required within 30 days prior to ground disturbance in suitable habitat areas. If burrowing owls are found to be present in the Biological Study Area (BSA) during subsequent	22	Natural Environment Study (NES)	City	Design Phase	14-6.03A					

Date of ECR: 1/12021
Date: June 29, 2007

Project Phase:
☐ PA/ED (*DED/FED*)
☒ PS&E Submittal_100_ %
☐ Construction

ENVIRONMENTAL COMMITMENTS RECORD
SR-60/Moreno Beach Interchange Improvement
Project Phase 2

08-RIV-60
PM 18.9 / 19.8

EA 08-32303
PN 0812000059
Generalist: Hannah Duarte
ECL: TBD

Avoidance, Minimization, and/or Mitigation Measures	Page # in Env. Doc. Or Permit	Environmental Analysis Source (Technical Study, Environmental Document, and/or Technical Discipline)	Responsible for Development and/or Implementation of Measure	Timing/ Phase	If applicable, corresponding construction provision: (standard, special, non-standard)	Action(s) Taken to Implement Measure/if checked No, add Explanation here	PS&E Task Completed	Construction Task Completed	Environmental Compliance	
							Date / Initials	Date / Initials	YES	NO
pre-construction surveys, then the project-specific mitigation would be developed and authorized through consultation with CDFW and USFWS.										

APPENDIX F

CALTRANS REVISED STANDARD PLANS (RSP'S)

© 2019 California Department of Transportation
All Rights Reserved

Dist	COUNTY	ROUTE	POST MILES TOTAL PROJECT	SHEET No.	TOTAL SHEETS

Atifa Ferouz
REGISTERED CIVIL ENGINEER

April 19, 2019
PLANS APPROVAL DATE

REGISTERED PROFESSIONAL ENGINEER
Atifa Ferouz
No. C80402
Exp. 3-31-21
CIVIL
STATE OF CALIFORNIA

THE STATE OF CALIFORNIA OR ITS OFFICERS OR AGENTS SHALL NOT BE RESPONSIBLE FOR THE ACCURACY OR COMPLETENESS OF SCANNED COPIES OF THIS PLAN SHEET.

TO ACCOMPANY PLANS DATED _____

LEFT EDGE LINES

(DIVIDED HIGHWAYS)
See Note

DETAIL 24

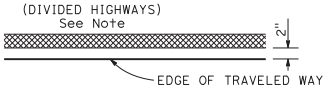

DETAIL 25

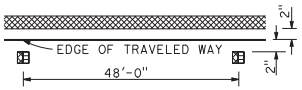

DETAIL 25A

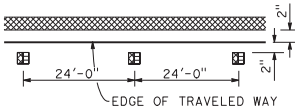

DETAIL 25B

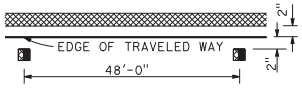

DETAIL 26

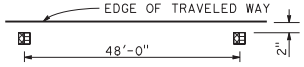

DETAIL 26A

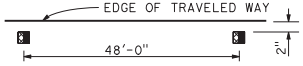

DETAIL 26B

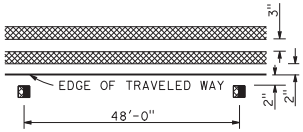

DETAIL 27

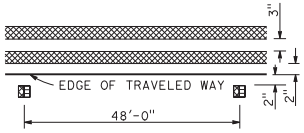

RIGHT EDGE LINES

~~DETAIL 27A~~ DETAIL 27A DELETED

DETAIL 27B

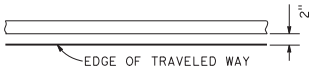

RIGHT EDGE LINE EXTENSION THROUGH INTERSECTIONS

DETAIL 27C

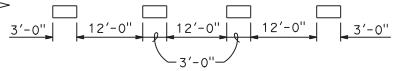

LEFT EDGE LINES NOTE:
On freeways use traffic stripe details with Type RY markers.

MEDIAN ISLANDS

DETAIL 28

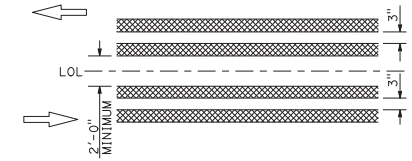

DETAIL 29

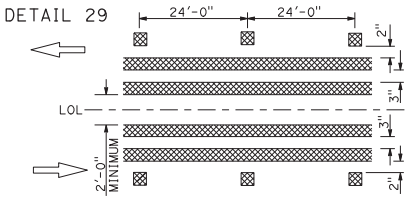

~~DETAIL 30~~ DETAIL 30 DELETED

TWO-WAY LEFT TURN LANES

DETAIL 31

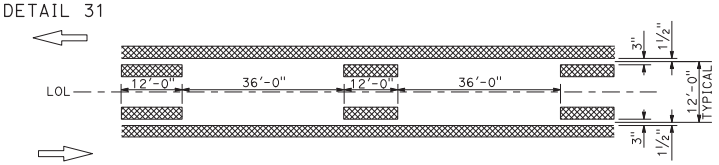

DETAIL 32

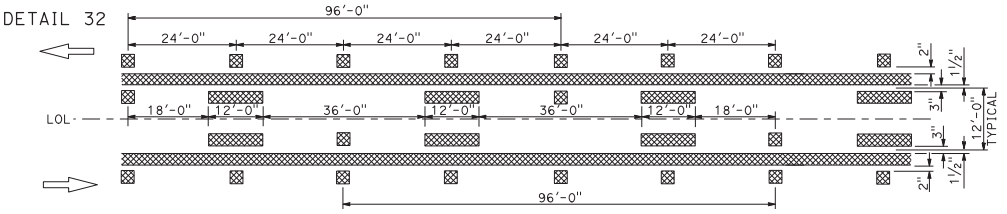

~~DETAIL 33~~ DETAIL 33 DELETED

INTERSECTION TREATMENTS

DETAIL 34

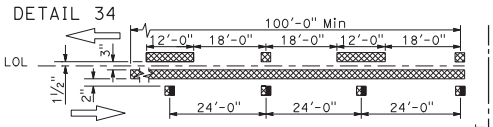

DETAIL 34A

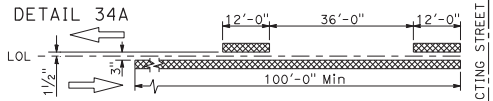

DETAIL 35

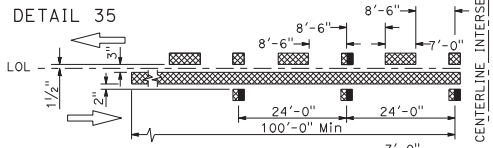

DETAIL 35A

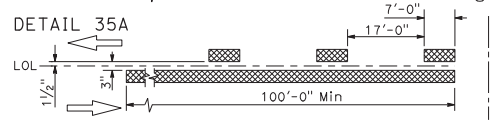

CENTERLINE INTERSECTING STREET

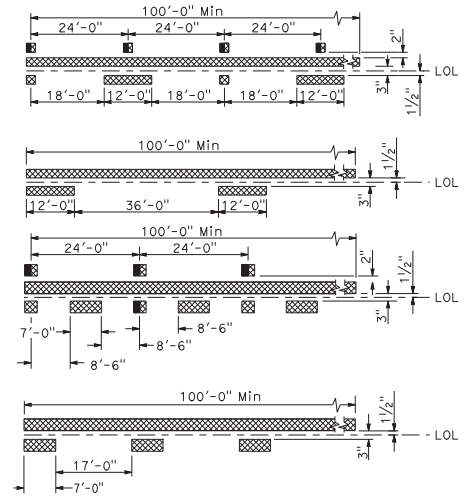

MARKER DETAILS

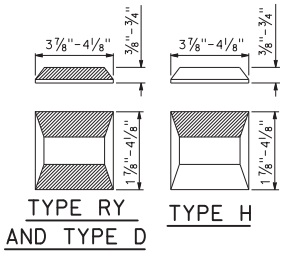

TYPE RY AND TYPE D

TYPE H

RETROREFLECTIVE FACE

LEGEND

MARKERS

- TYPE D — TWO-WAY YELLOW RETROREFLECTIVE
- TYPE H — ONE-WAY YELLOW RETROREFLECTIVE
- TYPE RY — RED-YELLOW RETROREFLECTIVE

LINES

- 6" WHITE
- 6" YELLOW

STATE OF CALIFORNIA
DEPARTMENT OF TRANSPORTATION

PAVEMENT MARKERS AND TRAFFIC LINES TYPICAL DETAILS

NO SCALE

RSP A20B DATED APRIL 19, 2019 SUPERSEDES STANDARD PLAN A20B
DATED MAY 31, 2018 - PAGE 13 OF THE STANDARD PLANS BOOK DATED 2018.

REVISED STANDARD PLAN RSP A20B

2018 REVISED STANDARD PLAN RSP A20B

11-15-18

© 2020 California Department of Transportation
All Rights Reserved

Dist	COUNTY	ROUTE	POST MILES TOTAL PROJECT	SHEET No.	TOTAL SHEETS

Atifa Ferouz
REGISTERED CIVIL ENGINEER

April 17, 2020
PLANS APPROVAL DATE

REGISTERED PROFESSIONAL ENGINEER — Atifa Ferouz — No. C80402 — Exp. 3-31-21 — CIVIL — STATE OF CALIFORNIA

THE STATE OF CALIFORNIA OR ITS OFFICERS OR AGENTS SHALL NOT BE RESPONSIBLE FOR THE ACCURACY OR COMPLETENESS OF SCANNED COPIES OF THIS PLAN SHEET.

TO ACCOMPANY PLANS DATED _____

EXIT RAMP NEUTRAL AREA (GORE) TREATMENT

DETAIL 36

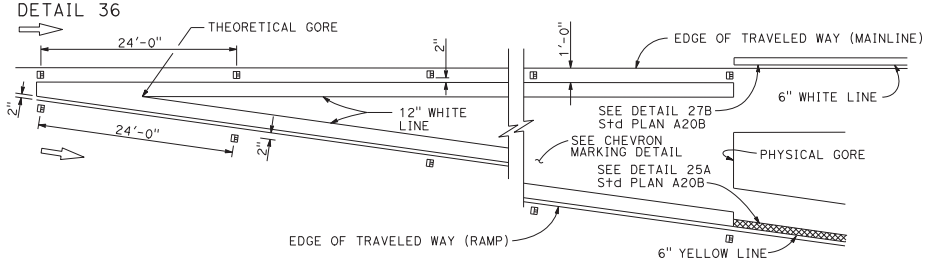

ENTRANCE RAMP NEUTRAL AREA (MERGE) TREATMENT

DETAIL 36A

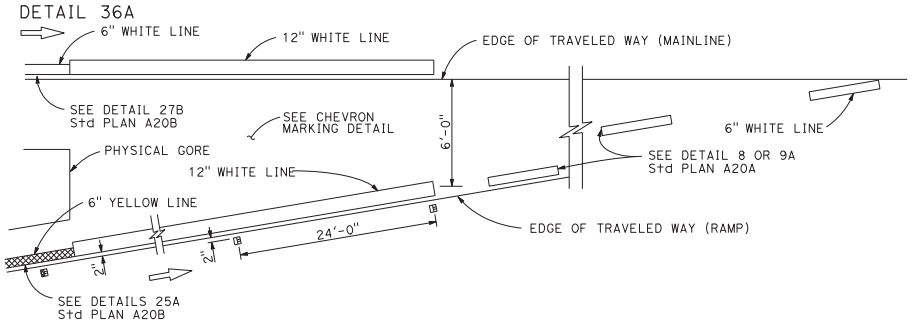

ENTRANCE RAMP NEUTRAL AREA (ACCELERATION LANE) TREATMENT

DETAIL 36B

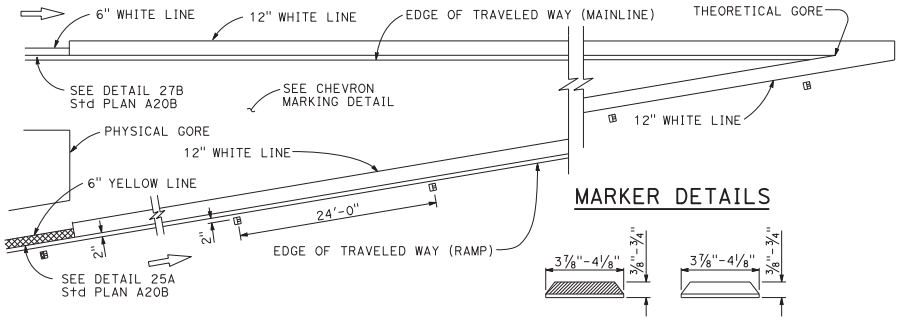

MARKER DETAILS

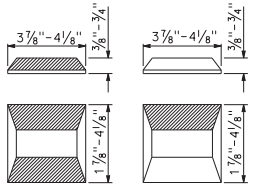

TYPE C AND TYPE RY

TYPE G

RETROREFLECTIVE FACE

LEGEND:

MARKERS

- TYPE C RED-CLEAR RETROREFLECTIVE
- TYPE G ONE-WAY CLEAR RETROREFLECTIVE
- TYPE RY RED-YELLOW RETROREFLECTIVE

NOTES:

Install a minimum of 1 chevron in the gore area. If at least 1 chevron will not fit into the gore area, do not install chevrons.

Terminate chevron markings at physical gore.

Gore area chevron pavement markings shown. For Exit and Entrance Ramp channelizing lines details, see Details 36, 36A, and 36B.

LANE DROP AT EXIT RAMPS

DETAIL 37

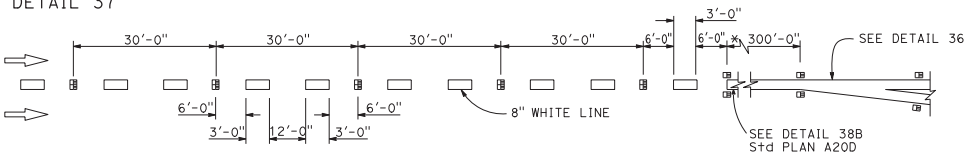

* The solid channelizing line shown may be omitted on short auxiliary lanes where weaving length is critical.

~~DETAIL 37A~~ DETAIL 37A DELETED

LANE DROP AT INTERSECTIONS

DETAIL 37B

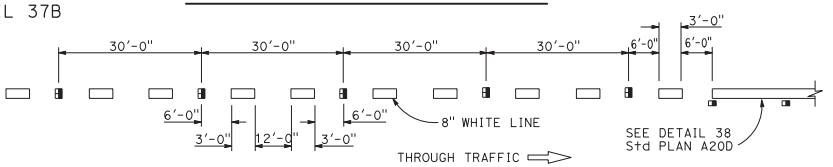

~~DETAIL 37C~~ DETAIL 37C DELETED

CHEVRON PAVEMENT MARKINGS AT EXIT RAMP GORE AREA

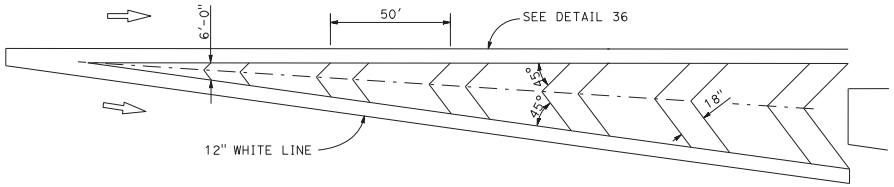

CHEVRON PAVEMENT MARKINGS AT ENTRANCE RAMP GORE AREA

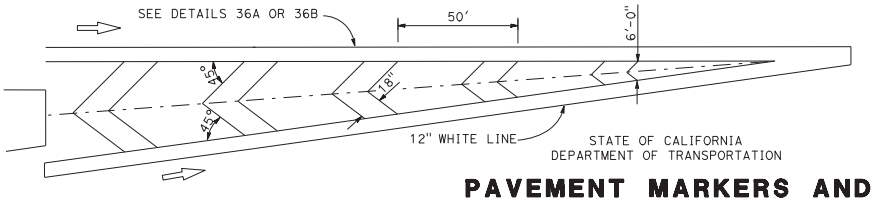

PAVEMENT MARKERS AND TRAFFIC LINES TYPICAL DETAILS

NO SCALE

RSP A20C DATED APRIL 17, 2020 SUPERSEDES RSP A20C DATED OCTOBER 19, 2018 AND STANDARD PLAN A20C DATED MAY 31, 2018 - PAGE 14 OF THE STANDARD PLANS BOOK DATED 2018.

REVISED STANDARD PLAN RSP A20C

2018 REVISED STANDARD PLAN RSP A20C

12-6-19

© 2018 California Department of Transportation
All Rights Reserved

CHANNELIZING LINE

DETAIL 38

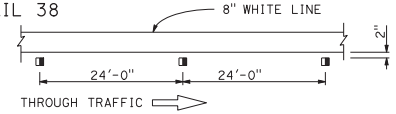

DETAIL 38A

DETAIL 38B

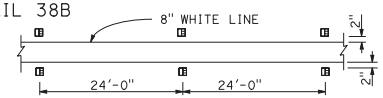

~~DETAIL 38C~~ DETAIL 38C DELETED

DETAIL 38D
(EXIT RAMPS ONLY)

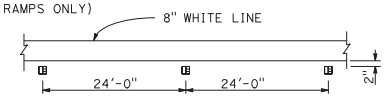

BIKE LANE LINE

DETAIL 39

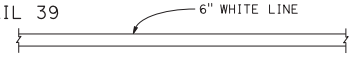

INTERSECTION LINE
BIKE LANE

DETAIL 39A

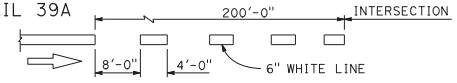

LANE LINE EXTENSIONS THROUGH INTERSECTIONS

DETAIL 40

~~DETAIL 40A~~ DETAIL 40A DELETED

CENTER LINE EXTENSIONS THROUGH INTERSECTIONS

DETAIL 41

~~DETAIL 41A~~ DETAIL 41A DELETED

LEGEND

MARKERS

TYPE C RED-CLEAR RETROREFLECTIVE

TYPE G ONE-WAY CLEAR RETROREFLECTIVE

6" YELLOW LINE

MARKER DETAILS

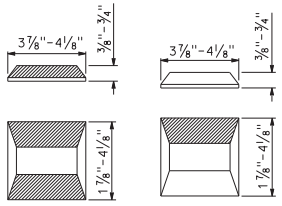

RETROREFLECTIVE FACE

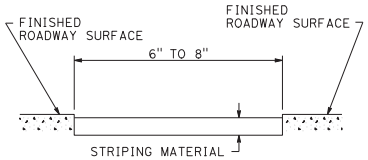

DETAIL FOR RECESSED TRAFFIC STRIPE

See Notes A and B.

RECESSED NOTES:

A. See typical traffic line details for pavement marking patterns.

B. See standard specifications for recess depth and recess striping material thickness.

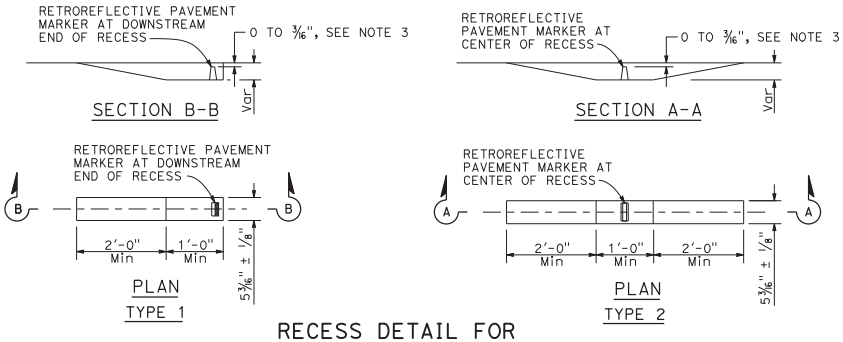

RECESS DETAIL FOR RETROREFLECTIVE PAVEMENT MARKER

See Note 4

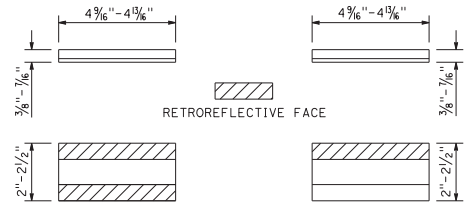

RETROREFLECTIVE PAVEMENT MARKER FOR RECESSED INSTALLATION

See Notes 1 and 2.

RECESSED MARKER NOTES:

1. See typical traffic line details for marker patterns to be used with recessed pavement markers.
2. The retroreflective pavement markers shown for recessed installations are not to be used for non-recessed installations.
3. The top of pavement markers installed in recesses shall be 0 to 3/16" below the pavement surface.
4. Use Type 1 recess for pavement markers with one-way retroreflective face. Use Type 2 recess for pavement markers with two-way retroreflective face.

Dist	COUNTY	ROUTE	POST MILES TOTAL PROJECT	SHEET No.	TOTAL SHEETS

Atifa Ferouz
REGISTERED CIVIL ENGINEER

October 19, 2018
PLANS APPROVAL DATE

REGISTERED PROFESSIONAL ENGINEER
Atifa Ferouz
No. C80402
Exp. 3-31-19
CIVIL
STATE OF CALIFORNIA

THE STATE OF CALIFORNIA OR ITS OFFICERS OR AGENTS SHALL NOT BE RESPONSIBLE FOR THE ACCURACY OR COMPLETENESS OF SCANNED COPIES OF THIS PLAN SHEET.

TO ACCOMPANY PLANS DATED _____

STATE OF CALIFORNIA
DEPARTMENT OF TRANSPORTATION

PAVEMENT MARKERS AND TRAFFIC LINES TYPICAL DETAILS

NO SCALE

RSP A20D DATED OCTOBER 19, 2018 SUPERSEDES STANDARD PLAN A20D
DATED MAY 31, 2018 - PAGE 15 OF THE STANDARD PLANS BOOK DATED 2018.

REVISED STANDARD PLAN RSP A20D

2018 REVISED STANDARD PLAN RSP A20D

5-10-18

© 2019 California Department of Transportation
All Rights Reserved

Dist	COUNTY	ROUTE	POST MILES TOTAL PROJECT	SHEET No.	TOTAL SHEETS

Atifa Ferouz
REGISTERED CIVIL ENGINEER

April 19, 2019
PLANS APPROVAL DATE

REGISTERED PROFESSIONAL ENGINEER
Atifa Ferouz
No. C80402
Exp. 3-31-21
CIVIL
STATE OF CALIFORNIA

THE STATE OF CALIFORNIA OR ITS OFFICERS OR AGENTS SHALL NOT BE RESPONSIBLE FOR THE ACCURACY OR COMPLETENESS OF SCANNED COPIES OF THIS PLAN SHEET.

TO ACCOMPANY PLANS DATED _____

NOTE:

1. See Standard Plans A20A, A20B, A20C, A20D, and A20F for pavement markers and traffic lines typical details.

TYPICAL LANE LINE OR RIGHT EDGE LINE CONTRAST DETAIL

STATE OF CALIFORNIA
DEPARTMENT OF TRANSPORTATION

PAVEMENT MARKERS AND TRAFFIC LINES TYPICAL DETAIL FOR CONTRAST STRIPING

NO SCALE

RSP A20E DATED APRIL 19, 2019 SUPERSEDES STANDARD PLAN A20E
DATED MAY 31, 2018 - PAGE 16 OF THE STANDARD PLANS BOOK DATED 2018.

REVISED STANDARD PLAN RSP A20E

2018 REVISED STANDARD PLAN RSP A20E

11-9-18

© 2019 California Department of Transportation
All Rights Reserved

PREFERENTIAL LANE LINES

DETAIL 42

DETAIL 43

DETAIL 43A

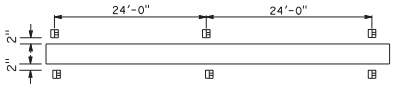

DETAIL 44A

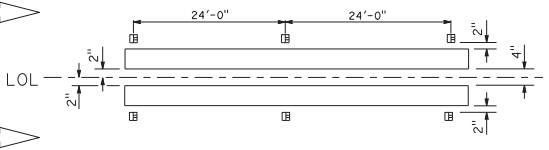

DETAIL 44B

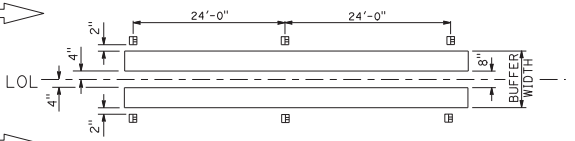

DETAIL 45

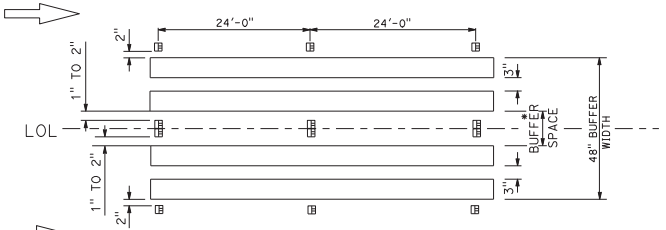

* If buffer space is wider than 4 feet use chevron markings.

LEGEND

MARKERS

TYPE C RED-CLEAR RETROREFLECTIVE

LINES

8" WHITE LINE

MARKER DETAILS

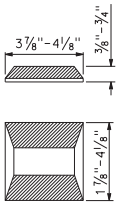

TYPE C

RETROREFLECTIVE FACE

Dist	COUNTY	ROUTE	POST MILES TOTAL PROJECT	SHEET No.	TOTAL SHEETS

Atifa Ferouz
REGISTERED CIVIL ENGINEER

April 19, 2019
PLANS APPROVAL DATE

REGISTERED PROFESSIONAL ENGINEER
Atifa Ferouz
No. C80402
Exp. 3-31-21
CIVIL
STATE OF CALIFORNIA

THE STATE OF CALIFORNIA OR ITS OFFICERS OR AGENTS SHALL NOT BE RESPONSIBLE FOR THE ACCURACY OR COMPLETENESS OF SCANNED COPIES OF THIS PLAN SHEET.

TO ACCOMPANY PLANS DATED _____

2018 REVISED STANDARD PLAN RSP A20F

STATE OF CALIFORNIA
DEPARTMENT OF TRANSPORTATION

PAVEMENT MARKERS AND TRAFFIC LINES TYPICAL DETAILS

NO SCALE

RSP A20F DATED APRIL 19, 2019 SUPERSEDES RSP A20F
DATED OCTOBER 19, 2018 THAT SUPPLEMENTS TO THE STANDARD PLANS BOOK DATED 2018.

REVISED STANDARD PLAN RSP A20F

11-9-18

© 2018 California Department of Transportation
All Rights Reserved

Dist	COUNTY	ROUTE	POST MILES TOTAL PROJECT	SHEET No.	TOTAL SHEETS

Atifa Ferouz
REGISTERED CIVIL ENGINEER

October 19, 2018
PLANS APPROVAL DATE

REGISTERED PROFESSIONAL ENGINEER
Atifa Ferouz
No. C80402
Exp. 3-31-19
CIVIL
STATE OF CALIFORNIA

THE STATE OF CALIFORNIA OR ITS OFFICERS OR AGENTS SHALL NOT BE RESPONSIBLE FOR THE ACCURACY OR COMPLETENESS OF SCANNED COPIES OF THIS PLAN SHEET.

TO ACCOMPANY PLANS DATED _____

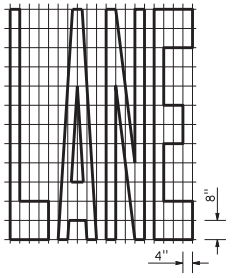

A=24 ft²

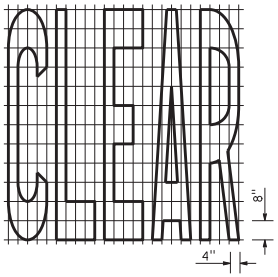

A=27 ft²

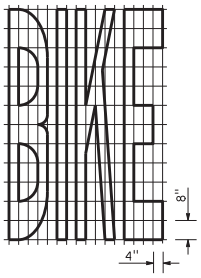

A=21 ft²

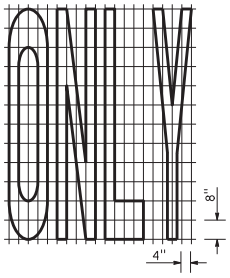

A=22 ft²

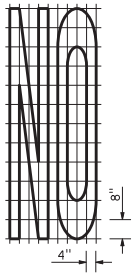

A=14 ft²

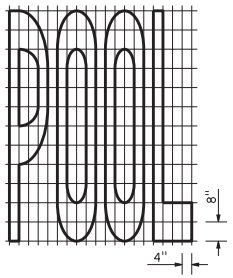

A=23 ft²

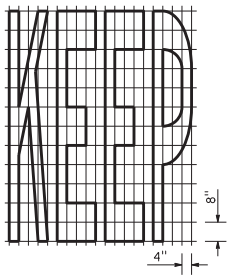

A=24 ft²

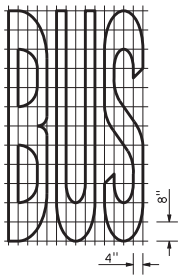

A=20 ft²

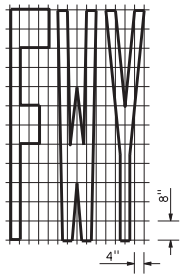

A=16 ft²

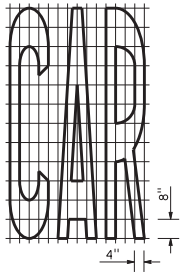

A=17 ft²

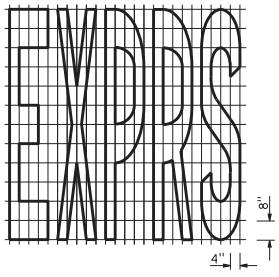

A=30 ft²

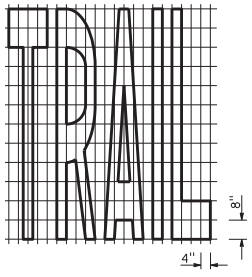

A=23 ft²

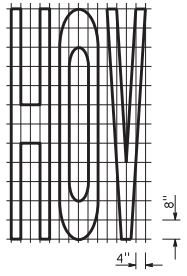

A=18 ft²

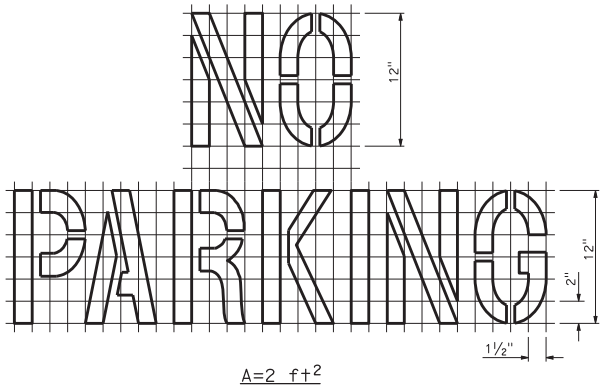

A=2 ft²
See Notes 5 and 6

NOTES:

1. If a message consists of more than one word, it must read "UP",i.e., the first word must be nearest the driver.
2. The space between words must be at least four times the height of the characters for low speed roads, but not more than ten times the height of the characters. The space may be reduced appropriately where there is limited space because of local conditions.
3. Minor variations in dimensions may be accepted by the Engineer.
4. Portions of a letter, number or symbol may be separated by connecting segments not to exceed 2" in width.
5. The words "NO PARKING" pavement marking is to be used for parking facilities. For typical locations of markings, see Standard Plans A90A and A90B.
6. The words "NO PARKING", shall be painted in white letters no less than 1'-0" high on a contrasting background and located so that it is visible to traffic enforcement officials.

WORD MARKINGS

ITEM	ft²	ITEM	ft²
LANE	24	NO	14
POOL	23	BIKE	21
CAR	17	BUS	20
CLEAR	27	ONLY	22
KEEP	24	FWY	16
HOV	18	EXPRS	30
TRAIL	23		

STATE OF CALIFORNIA
DEPARTMENT OF TRANSPORTATION

PAVEMENT MARKINGS
WORDS

NO SCALE

RSP A24E DATED OCTOBER 19, 2018 SUPERSEDES STANDARD PLAN A24E
DATED MAY 31, 2018 - PAGE 21 OF THE STANDARD PLANS BOOK DATED 2018.

REVISED STANDARD PLAN RSP A24E

2018 REVISED STANDARD PLAN RSP A24E

4-17-18

© 2018 California Department of Transportation
All Rights Reserved

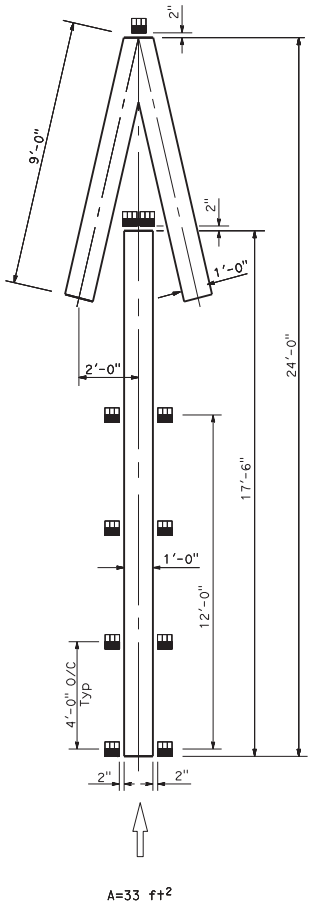

A=33 ft²

TYPE V ARROW AT EXIT RAMP

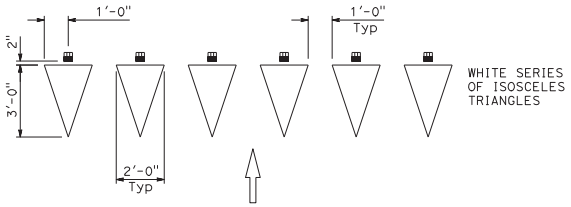

YIELD LINE AT EXIT RAMP

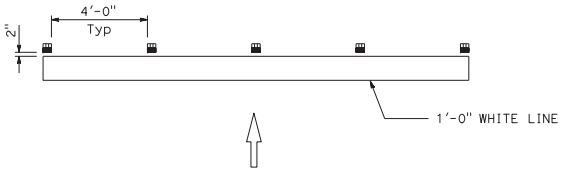

LIMIT LINE (STOP LINE) AT EXIT RAMP

NOTE:

1. If there is crosswalk at the end of the exit ramp, place Type R markers in front of the first line for wrong way vehicle that travels up the ramp with the red reflective side facing the intersection.

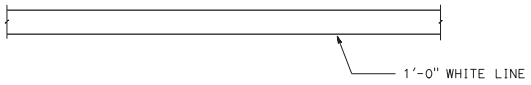

LIMIT LINE (STOP LINE)

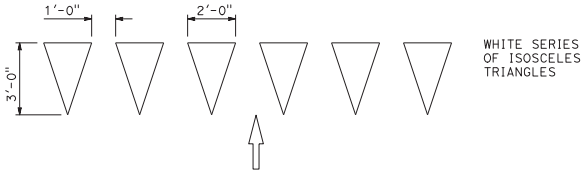

YIELD LINE

LEGEND

MARKERS

TYPE R ONE-WAY RED RETROREFLECTIVE

MARKER DETAILS

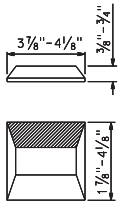

TYPE R

RETROREFLECTIVE FACE ON BACKSIDE

Dist	COUNTY	ROUTE	POST MILES TOTAL PROJECT	SHEET No.	TOTAL SHEETS

Atifa Ferouz
REGISTERED CIVIL ENGINEER

October 19, 2018
PLANS APPROVAL DATE

REGISTERED PROFESSIONAL ENGINEER
Atifa Ferouz
No. C80402
Exp. 3-31-19
CIVIL
STATE OF CALIFORNIA

THE STATE OF CALIFORNIA OR ITS OFFICERS OR AGENTS SHALL NOT BE RESPONSIBLE FOR THE ACCURACY OR COMPLETENESS OF SCANNED COPIES OF THIS PLAN SHEET.

TO ACCOMPANY PLANS DATED _____

2018 REVISED STANDARD PLAN RSP A24G

STATE OF CALIFORNIA
DEPARTMENT OF TRANSPORTATION

PAVEMENT MARKINGS YIELD LINES, LIMIT LINES, AND WRONG WAY DETAILS

NO SCALE

RSP A24G DATED OCTOBER 19, 2018 SUPPLEMENT TO THE STANDARD PLANS BOOK DATED 2018.

REVISED STANDARD PLAN RSP A24G

5-10-18

© 2018 California Department of Transportation
All Rights Reserved

Dist	COUNTY	ROUTE	POST MILES TOTAL PROJECT	SHEET No.	TOTAL SHEETS

REGISTERED CIVIL ENGINEER

October 19, 2018
PLANS APPROVAL DATE

Carl M. Duan
No. C59976
Exp. 6-30-20
CIVIL
REGISTERED PROFESSIONAL ENGINEER
STATE OF CALIFORNIA

THE STATE OF CALIFORNIA OR ITS OFFICERS OR AGENTS SHALL NOT BE RESPONSIBLE FOR THE ACCURACY OR COMPLETENESS OF SCANNED COPIES OF THIS PLAN SHEET.

TO ACCOMPANY PLANS DATED _____

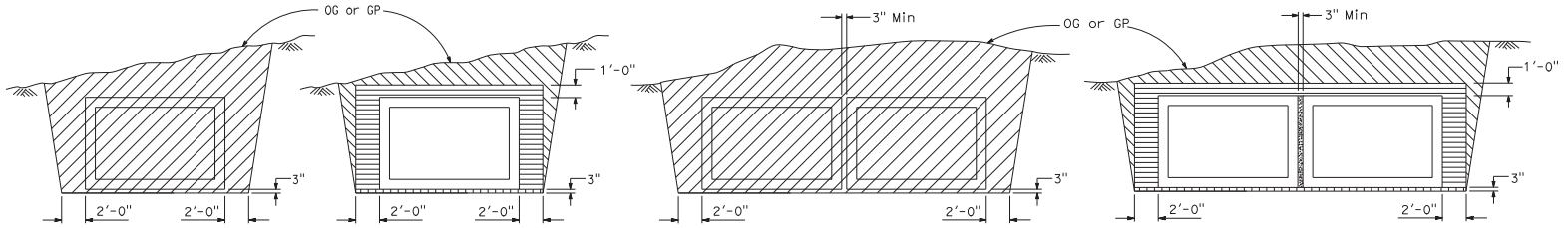

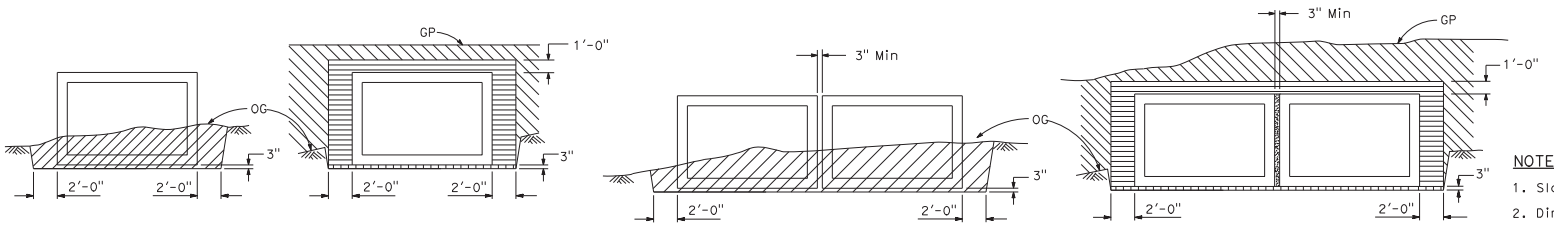

FILL HEIGHT GREATER THAN 2'-0"

LEGEND:

- STRUCTURE EXCAVATION (CULVERT)
- STRUCTURE BACKFILL (CULVERT) 95% RELATIVE COMPACTION
- ROADWAY EMBANKMENT
- SLURRY CEMENT BACKFILL
- SAND BEDDING (CULVERT)
- ROADWAY PAVEMENT STRUCTURE

NOTES:

1. Slope or shore excavation sides as necessary.
2. Dimensions shown are minimum.
3. Method 2 and 3 for single or multiple boxes requires an approved external sealing band. See Revised Standard Plan RSP D83A.
4. Construction of Roadway Pavement Structure in Method 2 or Method 3 shall not disturb the external sealing band installation.

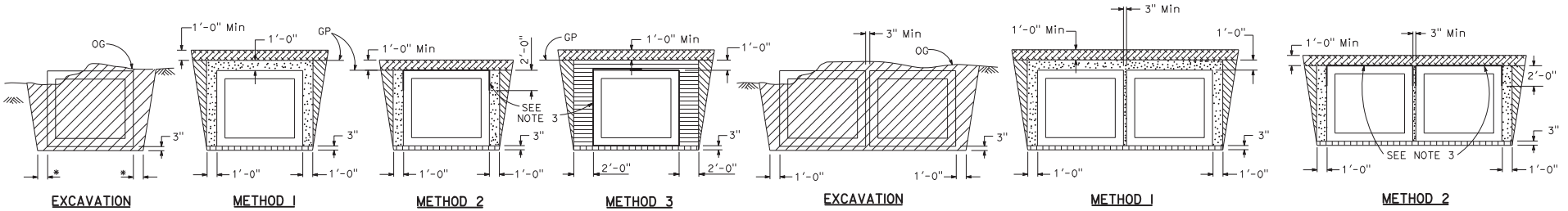

* 1'-0" Where Method 1 or 2 Backfill is used.
2'-0" Where Method 3 Backfill is used.

FILL HEIGHT 2'-0" OR LESS

BACKFILL

STATE OF CALIFORNIA
DEPARTMENT OF TRANSPORTATION

EXCAVATION AND BACKFILL PRECAST REINFORCED CONCRETE BOX CULVERT

NO SCALE

RSP A62G DATED OCTOBER 19, 2018 SUPERSEDES STANDARD PLAN A62G
DATED MAY 31, 2018 - PAGE 35 OF THE STANDARD PLANS BOOK DATED 2018.

REVISED STANDARD PLAN RSP A62G

2018 REVISED STANDARD PLAN RSP A62G

5-10-18

© 2019 California Department of Transportation
All Rights Reserved

Dist	COUNTY	ROUTE	POST MILES TOTAL PROJECT	SHEET No.	TOTAL SHEETS

REGISTERED CIVIL ENGINEER

October 18, 2019
PLANS APPROVAL DATE

Arshad Iqbal
No. C62831
Exp. 6-30-20
CIVIL
STATE OF CALIFORNIA

THE STATE OF CALIFORNIA OR ITS OFFICERS OR AGENTS SHALL NOT BE RESPONSIBLE FOR THE ACCURACY OR COMPLETENESS OF SCANNED COPIES OF THIS PLAN SHEET.

TO ACCOMPANY PLANS DATED _____

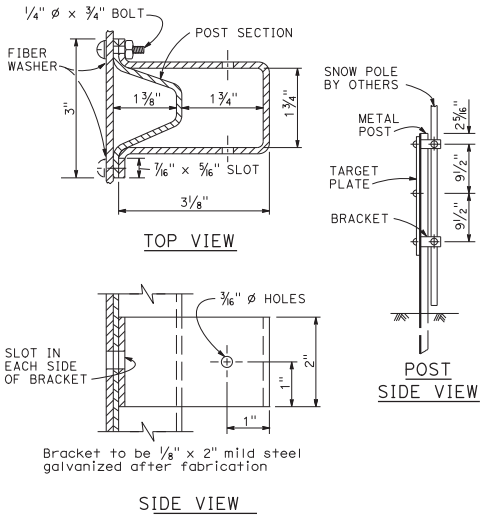

SNOW POLE BRACKET

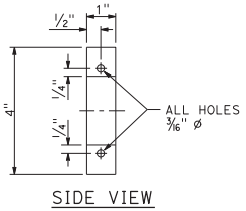

TWO PLATE POST MOUNT

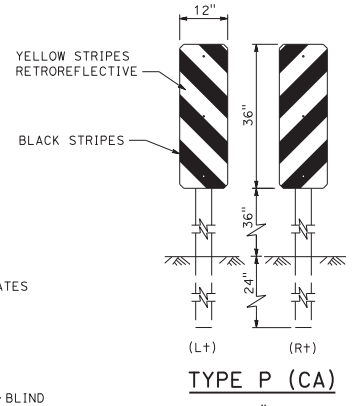

TYPE P (CA)

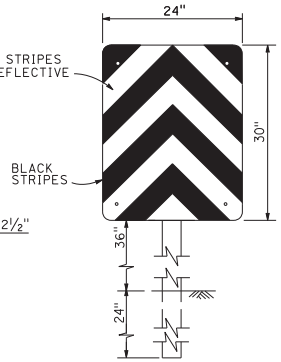

TYPE R (CA)

NOTES:

A. See Std Plan A73A for additional object markers.

B. Type P(CA) and R(CA) markers shall have orange and white retroreflective stripes in work zones.

C. Diagonal stripes on Type P(CA) markers shall be sloped down in the direction of travel.

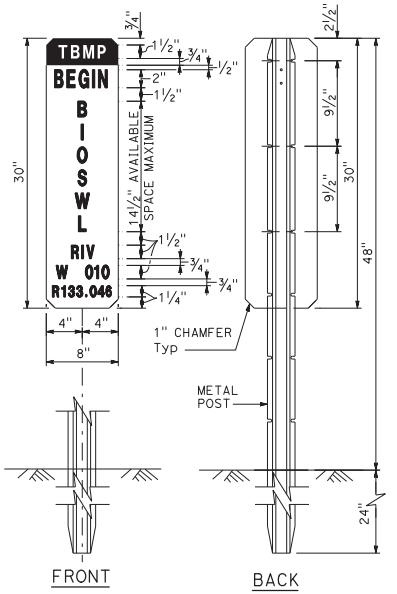

TBMP MARKER

TREATMENT BEST MANAGEMENT PRACTICE (TBMP) MARKER

NOTES:

1. The marker header shall be green (non-reflective) background with white (non-reflective) Series C letters.
2. The marker body shall be white (non-reflective) target plate with black Series C numbers and letters.
3. "BEGIN" or "END" shall apply as directed by the Engineer.
4. TBMP abbreviations shall be Series D letters up to a maximum of 2" tall, to fit within the available maximum space of 14.5".
5. See Project Plans for TBMP abbreviations.

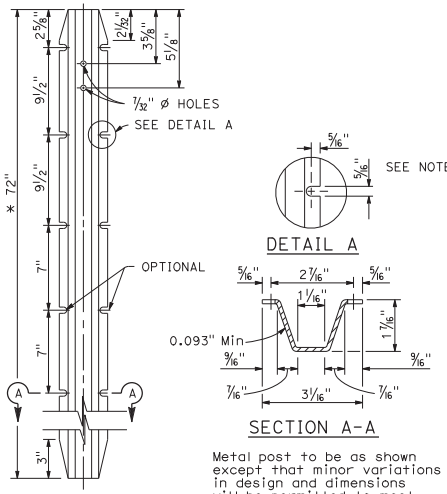

Metal post to be as shown except that minor variations in design and dimensions will be permitted to meet manufacturer's standards.

* 8'-0" for Type P object marker

METAL POST DETAIL

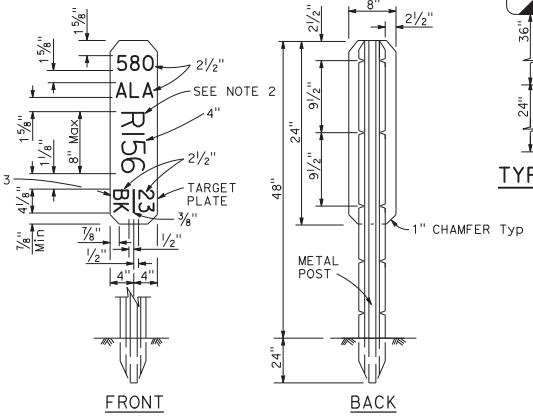

MILEPOST MARKER NOTES:

1. The marker shall be white (non-reflective) target plate with black Series D numerals and letters.
2. A post mile prefix, such as "R", shall apply only when directed by the Engineer.
3. "BK" (Back), "AH" (Ahead), or a blank space shall apply as directed by the Engineer.
4. All information shall be in U.S. Customary units (miles).

MILEPOST MARKER

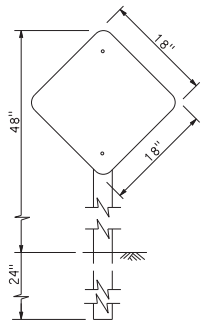

TYPE N-1 (CA), N-2 (CA), N-3 (CA)

N-1(CA). Yellow retroreflective.
N-2(CA). Red retroreflective.
N-3(CA). Orange retroreflective.

OBJECT MARKERS

STATE OF CALIFORNIA
DEPARTMENT OF TRANSPORTATION

MARKERS

NO SCALE

RSP A73B DATED OCTOBER 18, 2019 SUPERSEDES RSP A73B DATED OCTOBER 19, 2018 AND STANDARD PLAN A73B DATED MAY 31, 2018 - PAGE 39 OF THE STANDARD PLANS BOOK DATED 2018.

REVISED STANDARD PLAN RSP A73B

2018 REVISED STANDARD PLAN RSP A73B

5-7-19

© 2020 California Department of Transportation
All Rights Reserved

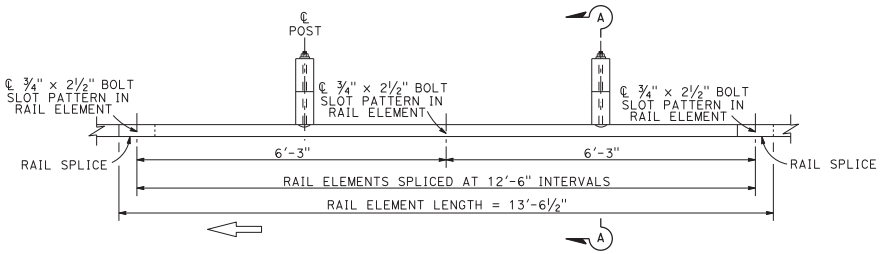

PLAN

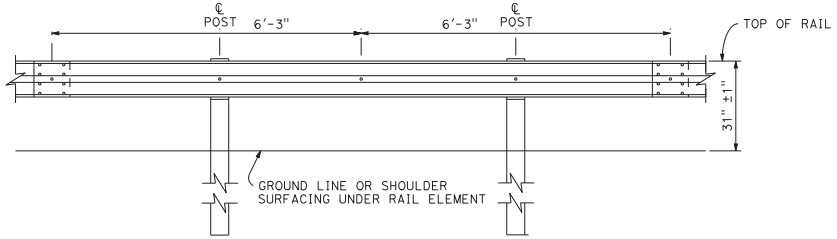

ELEVATION

MIDWEST GUARDRAIL SYSTEM WITH WOOD POST AND BLOCKS

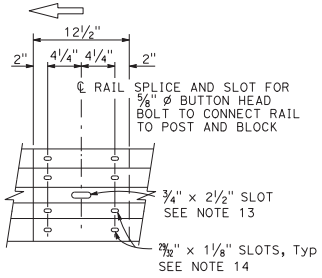

ELEVATION

RAIL ELEMENT SPLICE DETAIL

a) Connect the overlapped end of the rail elements with ⅝" ø x 1¼" button head oval shoulder splice bolts inserted into the 29/32" x 1⅛" slots and bolted together with ⅝" ø recessed hex nuts. Recess of hex nut points toward rail element. A total of 8 bolts and nuts are to be used at each rail splice connection.

b) The ends of the rail elements are to be overlapped in the direction of traffic (see details).

c) Where end cap is to be attached to the end of a rail element, a total of 4 of the above described splice bolts and nuts are to be used.

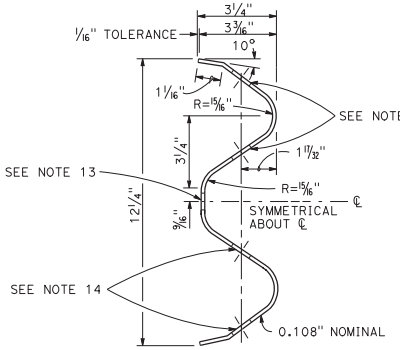

SECTION THRU RAIL ELEMENT

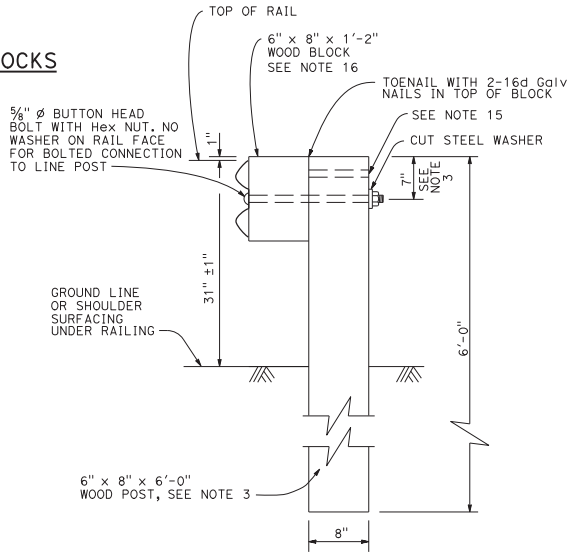

SECTION A-A

TYPICAL WOOD LINE POST INSTALLATION

See Note 4

NOTES:

1. For details of steel post installations, see Revised Standard Plan RSP A77L2.
2. For details of standard hardware used to construct MGS, see Revised Standard Plan RSP A77M1.
3. For details of wood posts and wood blocks used to construct MGS, see Standard Plan A77N1.
4. For additional installation details, see Standard Plan A77N3.
5. MGS post spacing to be 6'-3" center to center, except as otherwise noted.
6. For MGS typical layouts, see the A77P, A77Q and A77R Series of Standard Plans.
7. If railing is connected to terminal system end treatment, use 31" height terminal system end treatment.
8. For MGS end anchor details, see Standard Plans A77S1 and A77T2.
9. For details of MGS transition to bridge railing, see Revised Standard Plan RSP A77U4.
10. For additional details of MGS connection to bridge railing, see Standard Plans A77U1, A77U2 and A77V1.
11. For MGS connection details to abutments and walls, see Standard Plan A77U3.
12. For typical MGS delineation and dike positioning details, see Revised Standard Plan RSP A77N4.
13. Slotted hole for bolted connection of rail element to block and post.
14. Slotted holes for splice bolts to overlap ends of rail element.
15. Additional hole in uppermost portion of line post is for potential future adjustments of railing height. See Standard Plan A77N1.
16. 6" x 12" x 1'-2" block must be used with 6" dike.
17. Install posts in soil.

Dist	COUNTY	ROUTE	POST MILES TOTAL PROJECT	SHEET No.	TOTAL SHEETS

Randell D. Hiatt
REGISTERED CIVIL ENGINEER

October 16, 2020
PLANS APPROVAL DATE

REGISTERED PROFESSIONAL ENGINEER — Randell D. Hiatt — No. C50200 — Exp. 6-30-21 — CIVIL — STATE OF CALIFORNIA

THE STATE OF CALIFORNIA OR ITS OFFICERS OR AGENTS SHALL NOT BE RESPONSIBLE FOR THE ACCURACY OR COMPLETENESS OF SCANNED COPIES OF THIS PLAN SHEET.

TO ACCOMPANY PLANS DATED _____

STATE OF CALIFORNIA
DEPARTMENT OF TRANSPORTATION

MIDWEST GUARDRAIL SYSTEM STANDARD RAILING SECTION (WOOD POST WITH WOOD BLOCK)

NO SCALE

RSP A77L1 DATED OCTOBER 16, 2020 SUPERSEDES RSP A77L1 DATED APRIL 19, 2019 AND STANDARD PLAN A77L1 DATED MAY 31, 2018 - PAGE 57 OF THE STANDARD PLANS BOOK DATED 2018.

REVISED STANDARD PLAN RSP A77L1

2018 REVISED STANDARD PLAN RSP A77L1

3-10-20

© 2020 California Department of Transportation
All Rights Reserved

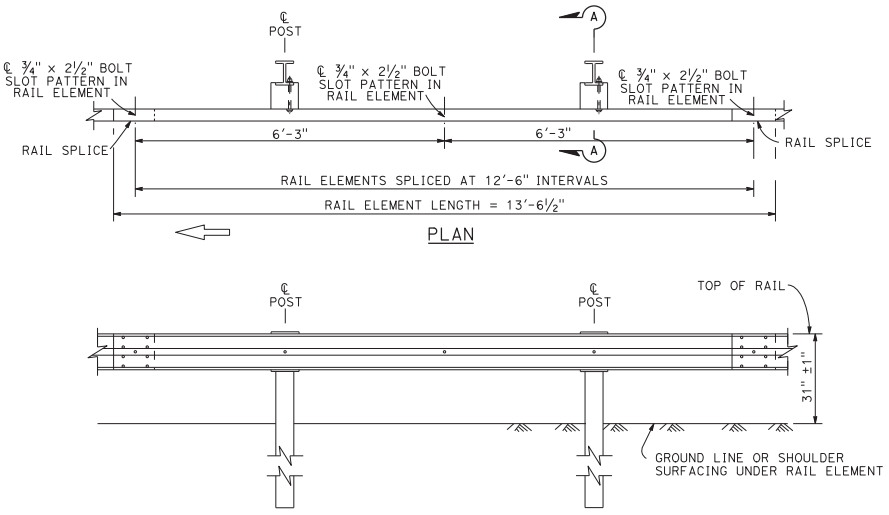

ELEVATION

MIDWEST GUARDRAIL SYSTEM WITH STEEL POSTS AND NOTCHED WOOD OR NOTCHED RECYCLED PLASTIC BLOCKS

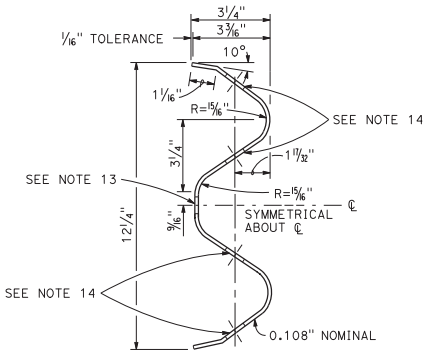

SECTION THRU RAIL ELEMENT

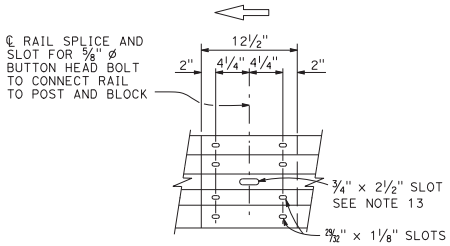

ELEVATION

RAIL ELEMENT SPLICE DETAIL

a) Connect the overlapped end of the rail elements with ⅝" ø x 1¼" button head oval shoulder splice bolts inserted into the 29/32" x 1⅛" slots and bolted together with ⅝" ø recessed hex nuts. Recess of hex nut points toward rail element. A total of 8 bolts and nuts are to be used at each rail splice connection.

b) The ends of the rail elements are to be overlapped in the direction of traffic (see details).

c) Where end cap is to be attached to the end of a rail element, a total of 4 of the above described splice bolts and nuts are to be used.

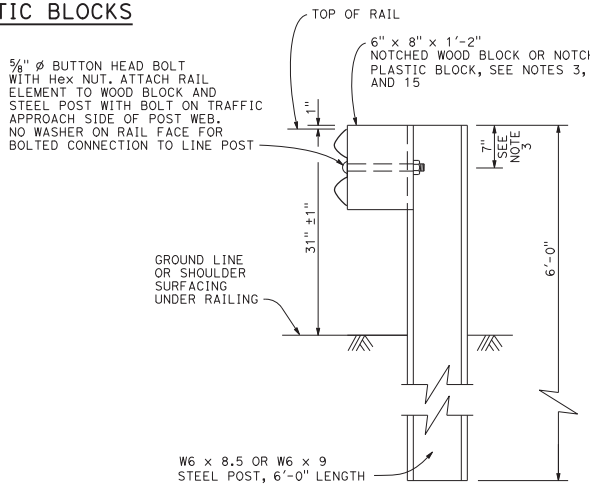

SECTION A-A

TYPICAL STEEL LINE POST INSTALLATION

See Note 4

NOTES:

1. For details of wood post installations, see Revised Standard Plan RSP A77L1.
2. For details of standard hardware used to construct MGS, see Revised Standard Plan RSP A77M1.
3. For details of steel posts and notched wood blocks used to construct MGS, see Standard Plan A77N2.
4. For additional installation details, see Standard Plan A77N3.
5. MGS post spacing to be 6'-3" center to center, except as otherwise noted.
6. For MGS typical layouts, see the A77P, A77Q and A77R Series of Standard Plans.
7. If railing is connected to terminal system end treatment, use 31" height terminal system end treatment.
8. For MGS end anchor details, see Standard Plans A77S1 and A77T2.
9. For details of MGS transition to bridge railing, see Revised Standard Plan RSP A77U4.
10. For additional details of MGS connection to bridge railings, see Standard Plans A77U1, A77U2 and A77V1.
11. For dike positioning and MGS delineation details, see Revised Standard Plan RSP A77N4.
12. Notched face of block faces steel post.
13. Slotted hole for bolted connection of rail element to block and post.
14. Slotted holes for splice bolts to overlap ends of rail element.
15. 6" x 12" x 1'-2" block must be used with 6" dike.
16. Install posts in soil.

Dist	COUNTY	ROUTE	POST MILES TOTAL PROJECT	SHEET No.	TOTAL SHEETS

Randell D. Hiatt
REGISTERED CIVIL ENGINEER

October 16, 2020
PLANS APPROVAL DATE

REGISTERED PROFESSIONAL ENGINEER — Randell D. Hiatt — No. C50200 — Exp. 6-30-21 — CIVIL — STATE OF CALIFORNIA

THE STATE OF CALIFORNIA OR ITS OFFICERS OR AGENTS SHALL NOT BE RESPONSIBLE FOR THE ACCURACY OR COMPLETENESS OF SCANNED COPIES OF THIS PLAN SHEET.

TO ACCOMPANY PLANS DATED _____

STATE OF CALIFORNIA
DEPARTMENT OF TRANSPORTATION

MIDWEST GUARDRAIL SYSTEM STANDARD RAILING SECTION (STEEL POST WITH NOTCHED WOOD OR NOTCHED RECYCLED PLASTIC BLOCK)

NO SCALE

RSP A77L2 DATED OCTOBER 16, 2020 SUPERSEDES RSP A77L2 DATED OCTOBER 18, 2019, RSP A77L2 DATED APRIL 19, 2019 AND STANDARD PLAN A77L2 DATED MAY 31, 2018 - PAGE 58 OF THE STANDARD PLANS BOOK DATED 2018.

REVISED STANDARD PLAN RSP A77L2

2018 REVISED STANDARD PLAN RSP A77L2

3-10-20

© 2020 California Department of Transportation
All Rights Reserved

Dist	COUNTY	ROUTE	POST MILES TOTAL PROJECT	SHEET No.	TOTAL SHEETS

Randell D. Hiatt
REGISTERED CIVIL ENGINEER

October 16, 2020
PLANS APPROVAL DATE

REGISTERED PROFESSIONAL ENGINEER — Randell D. Hiatt — No. C50200 — Exp. 6-30-21 — CIVIL — STATE OF CALIFORNIA

THE STATE OF CALIFORNIA OR ITS OFFICERS OR AGENTS SHALL NOT BE RESPONSIBLE FOR THE ACCURACY OR COMPLETENESS OF SCANNED COPIES OF THIS PLAN SHEET.

TO ACCOMPANY PLANS DATED _____

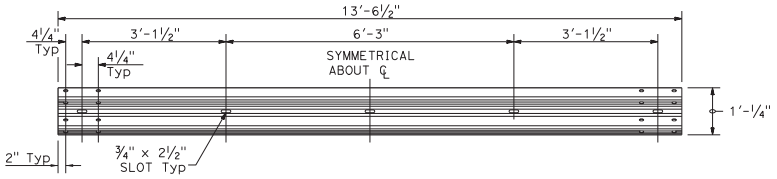

TYPICAL RAIL ELEMENT

NOTE:

1. Slotted holes for splice bolts to overlap ends of rail element.

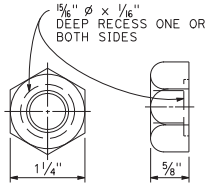

⅝" ø RECESS NUT

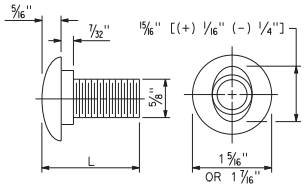

⅝" ø BUTTON HEAD BOLT

BUTTON HEAD BOLT

L	THREAD LENGTH
1¼"	FULL THREAD LENGTH
2"	FULL THREAD LENGTH
10"	4" Min THREAD LENGTH
18"	4" Min THREAD LENGTH
20"	4" Min THREAD LENGTH
22"	4" Min THREAD LENGTH
26"	4" Min THREAD LENGTH
36"	4" Min THREAD LENGTH
** 2¾"	2" Min THREAD LENGTH
** 19"	4" Min THREAD LENGTH

** For nested rail applications.

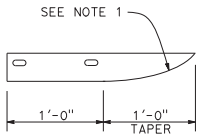

PLAN

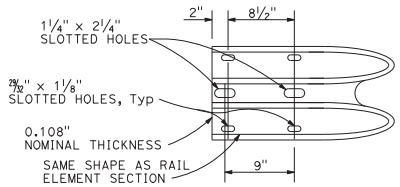

ELEVATION

END CAP
(TYPE A)

STATE OF CALIFORNIA
DEPARTMENT OF TRANSPORTATION

MIDWEST GUARDRAIL SYSTEM STANDARD HARDWARE

NO SCALE

RSP A77M1 DATED OCTOBER 16, 2020 SUPERSEDES STANDARD PLAN A77M1 DATED MAY 31, 2018 - PAGE 60 OF THE STANDARD PLANS BOOK DATED 2018.

REVISED STANDARD PLAN RSP A77M1

2018 REVISED STANDARD PLAN RSP A77M1

2-26-20

© 2019 California Department of Transportation
All Rights Reserved

Dist	COUNTY	ROUTE	POST MILES TOTAL PROJECT	SHEET No.	TOTAL SHEETS

Randell D. Hiatt
REGISTERED CIVIL ENGINEER

October 18, 2019
PLANS APPROVAL DATE

REGISTERED PROFESSIONAL ENGINEER
Randell D. Hiatt
No. C50200
Exp. 6-30-21
CIVIL
STATE OF CALIFORNIA

THE STATE OF CALIFORNIA OR ITS OFFICERS OR AGENTS SHALL NOT BE RESPONSIBLE FOR THE ACCURACY OR COMPLETENESS OF SCANNED COPIES OF THIS PLAN SHEET.

TO ACCOMPANY PLANS DATED _____

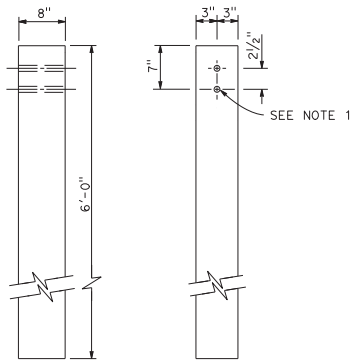

6" x 8" WOOD POST
See Note 3

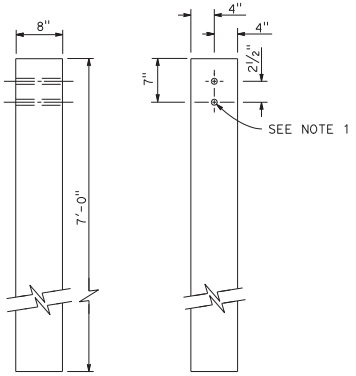

8" x 8" WOOD POST
See Note 4

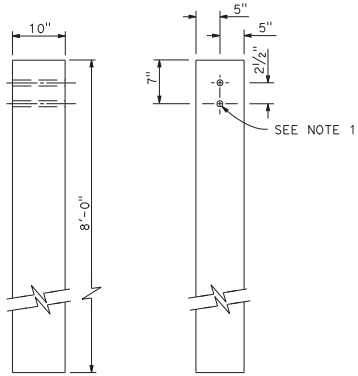

10" x 10" WOOD POST
See Note 5

NOTES:

1. All holes in wood posts and blocks shall be ¾" Dia ± 1/16".
2. Dimensions shown for wood post are nominal.
3. This post and block combination used for standard line post sections of MGS.
4. This post and 8" x 8" block combination used for line post sections of MGS on narrow roadways.
5. This post and 8" x 8" block combination is typically used where strengthened line post sections of MGS are warranted to shield fixed objects.
6. See Standard Plan A77L3 for use of 6" x 8" and 8" x 8" wood blocks.
7. To be used with 8" x 8" x 7'-0" wood post if installed with 6" height dike.
8. To be used with 6" x 8" x 6'-0" wood post if installed with 6" height dike.

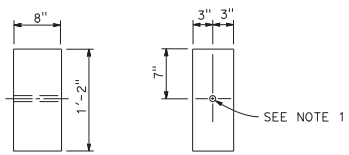

6" x 8" WOOD BLOCK
See Note 6 and Note 3

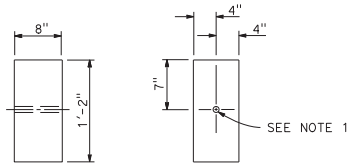

8" x 8" WOOD BLOCK
See Note 6 and Note 4

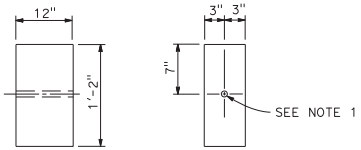

6" x 12" WOOD BLOCK
See Note 8

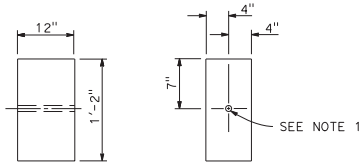

8" x 12" WOOD BLOCK
See Note 7

STATE OF CALIFORNIA
DEPARTMENT OF TRANSPORTATION

MIDWEST GUARDRAIL SYSTEM WOOD POST AND WOOD BLOCK DETAILS

NO SCALE

RSP A77N1 DATED OCTOBER 18, 2019 SUPERSEDES STANDARD PLAN A77N1 DATED MAY 31, 2018 - PAGE 61 OF THE STANDARD PLANS BOOK DATED 2018.

REVISED STANDARD PLAN RSP A77N1

2018 REVISED STANDARD PLAN RSP A77N1

7-2-19

© 2018 California Department of Transportation
All Rights Reserved

Dist	COUNTY	ROUTE	POST MILES TOTAL PROJECT	SHEET No.	TOTAL SHEETS

Randell D. Hiatt
REGISTERED CIVIL ENGINEER

October 19, 2018
PLANS APPROVAL DATE

REGISTERED PROFESSIONAL ENGINEER — Randell D. Hiatt — No. C50200 — Exp. 6-30-19 — CIVIL — STATE OF CALIFORNIA

THE STATE OF CALIFORNIA OR ITS OFFICERS OR AGENTS SHALL NOT BE RESPONSIBLE FOR THE ACCURACY OR COMPLETENESS OF SCANNED COPIES OF THIS PLAN SHEET.

TO ACCOMPANY PLANS DATED _____

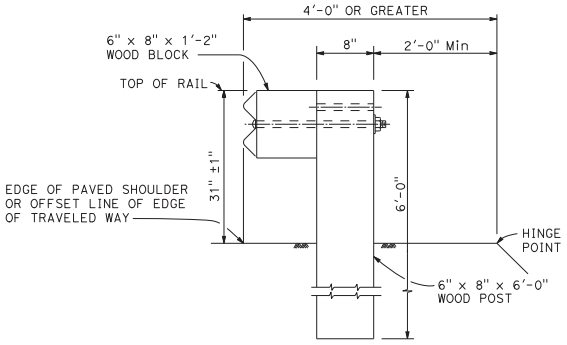

DETAIL A

TYPICAL ROADWAY INSTALLATION

See Note 1

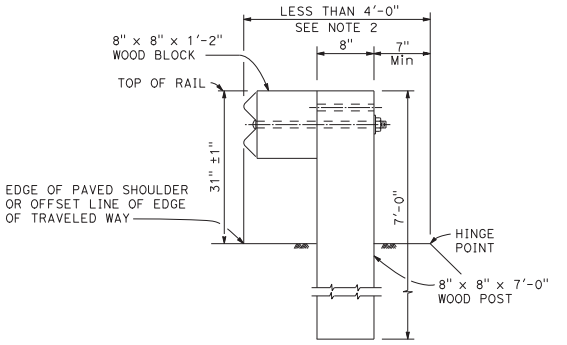

DETAIL B

NARROW ROADWAY INSTALLATION

See Note 1

POST EMBEDMENT

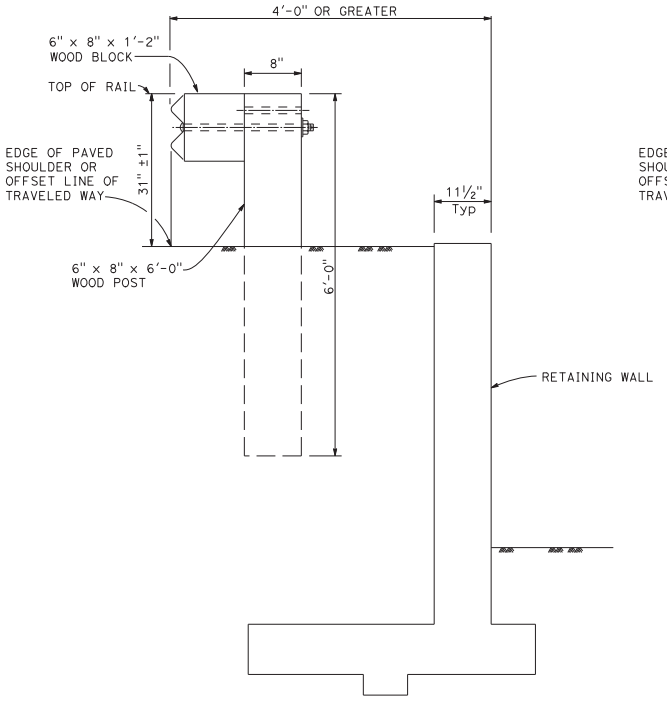

DETAIL C

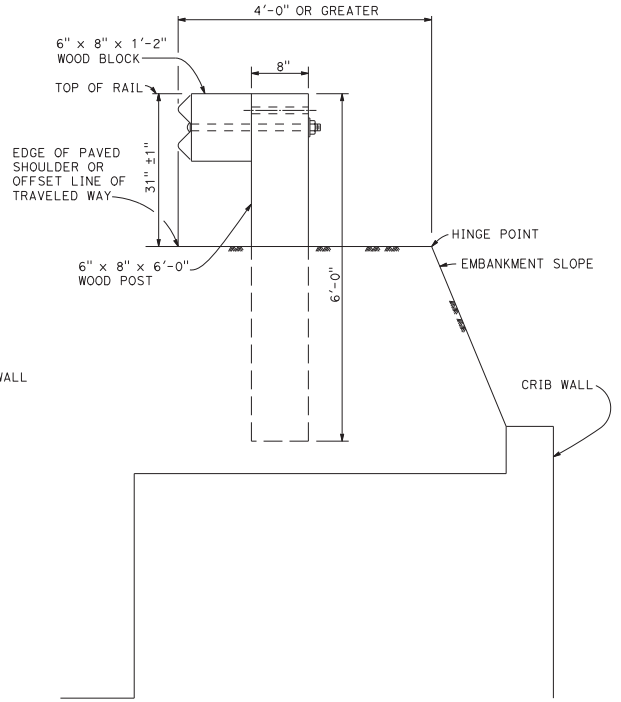

DETAIL D

INSTALLATION AT EARTH RETAINING WALLS

NOTES:

1. These installation details also applicable to steel line post installations. For Detail A, C, and D, where steel line post installations are constructed, W6 x 8.5 or W6 x 9 steel post, 6'-0" in length, with 6" x 8" x 1'-2" notched wood blocks or notched recycled plastic blocks are to be used in place of the size of wood post and wood block shown. For Detail B, where steel line post installations are constructed, W6 x 8.5 or W6 x 9 steel post, 8'-0" in length, with 8" x 8" x 1'-2" notched wood blocks or notched recycled plastic blocks are to be used in place of the size of wood post and wood block shown. For additional installation details, see Standard Plans A77L1 and A77L2.
2. Where the distance between the back of the post and the hinge point is less than 7", see the Project Plans for special details.
3. For dike positioning with MGS installations, see Standard Plan A77N4.

STATE OF CALIFORNIA
DEPARTMENT OF TRANSPORTATION

MIDWEST GUARDRAIL SYSTEM TYPICAL LINE POST EMBEDMENT AND HINGE POINT OFFSET DETAILS

NO SCALE

RSP A77N3 DATED OCTOBER 19, 2018 SUPERSEDES STANDARD PLAN A77N3 DATED MAY 31, 2018 - PAGE 63 OF THE STANDARD PLANS BOOK DATED 2018.

REVISED STANDARD PLAN RSP A77N3

2018 REVISED STANDARD PLAN RSP A77N3

7-11-18

© 2019 California Department of Transportation
All Rights Reserved

Dist	COUNTY	ROUTE	POST MILES TOTAL PROJECT	SHEET No.	TOTAL SHEETS

Randell D. Hiatt
REGISTERED CIVIL ENGINEER

April 19, 2019
PLANS APPROVAL DATE

REGISTERED PROFESSIONAL ENGINEER
Randell D. Hiatt
No. C50200
Exp. 6-30-19
CIVIL
STATE OF CALIFORNIA

THE STATE OF CALIFORNIA OR ITS OFFICERS OR AGENTS SHALL NOT BE RESPONSIBLE FOR THE ACCURACY OR COMPLETENESS OF SCANNED COPIES OF THIS PLAN SHEET.

TO ACCOMPANY PLANS DATED _____

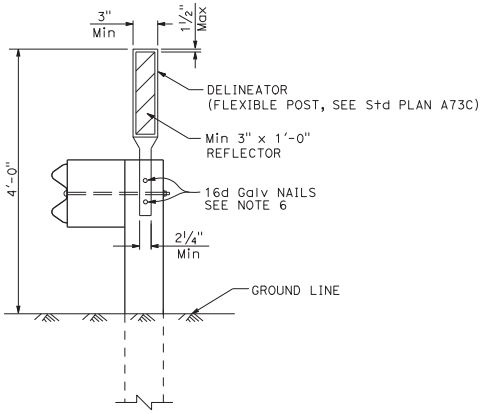

MGS DELINEATION
See Note 3

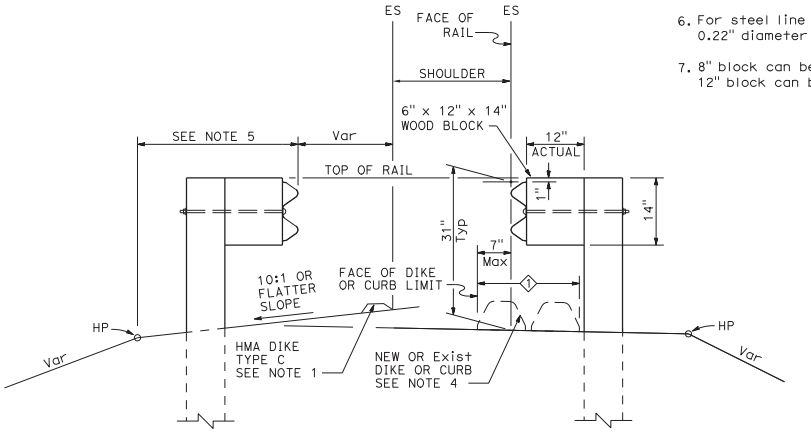

DIKE POSITIONING
See Note 1

① PERMISSIBLE DIKE OR CURB PLACEMENT AREA

NOTES:

1. When necessary to place dike more than 7" in front of face of MGS, only Type C dike may be used. For dike details, see Standard Plan A87B.
2. For standard railing post embedment, see Standard Plan A77N3.
3. MGS delineation to be used where shown on the Project Plans.
4. When dike or curb is placed under MGS, the maximum height of the dike or curb shall be 6". Mountable dike should not be used. For dike and curb details, see Standard Plans A87A and A87B.
5. For details of typical distance between the face of rail and hinge point, see Standard Plan A77N3.
6. For steel line posts, use ¼ - 20 self-tapping screws in 0.22" diameter holes or ¼" bolts in $^{9}/_{32}$" diameter holes.
7. 8" block can be used with 4" or lower dike, or no dike. 12" block can be used with 6" or lower dike, or no dike.

STATE OF CALIFORNIA
DEPARTMENT OF TRANSPORTATION

MIDWEST GUARDRAIL SYSTEM TYPICAL RAILING DELINEATION AND DIKE POSITIONING DETAILS

NO SCALE

RSP A77N4 DATED APRIL 19, 2019 SUPERSEDES STANDARD PLAN A77N4
DATED MAY 31, 2018 - PAGE 64 OF THE STANDARD PLANS BOOK DATED 2018.

REVISED STANDARD PLAN RSP A77N4

2018 REVISED STANDARD PLAN RSP A77N4

12-11-18

© 2019 California Department of Transportation
All Rights Reserved

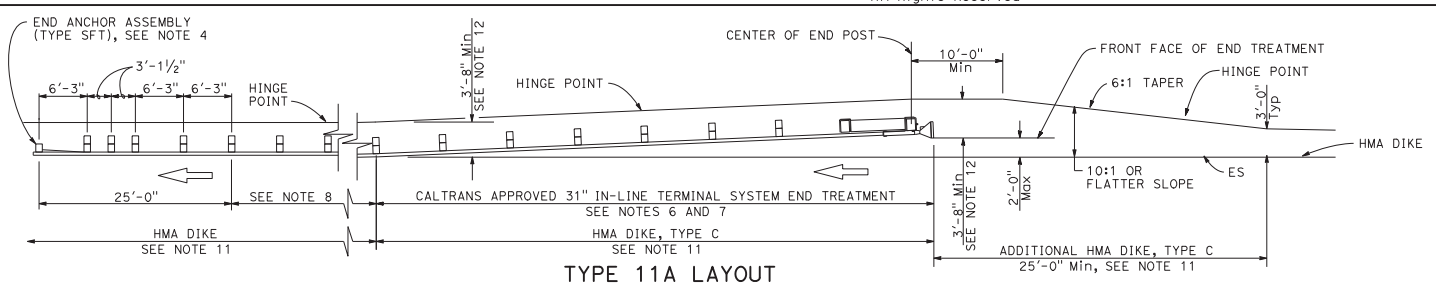

TYPE 11A LAYOUT

(Embankment MGS installation with 31" in-line end treatment at traffic approach end of railing)
See Note 5

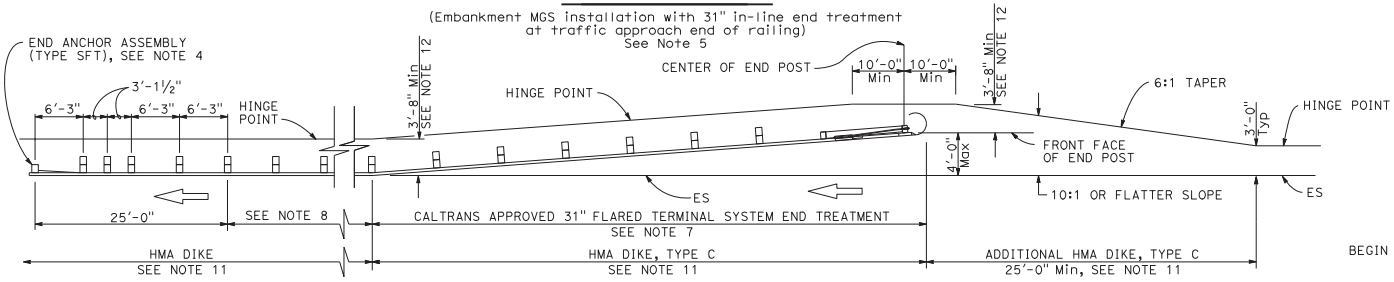

TYPE 11B LAYOUT

(Embankment MGS installation with 31" flared end treatment at traffic approach end of railing)
See Note 5

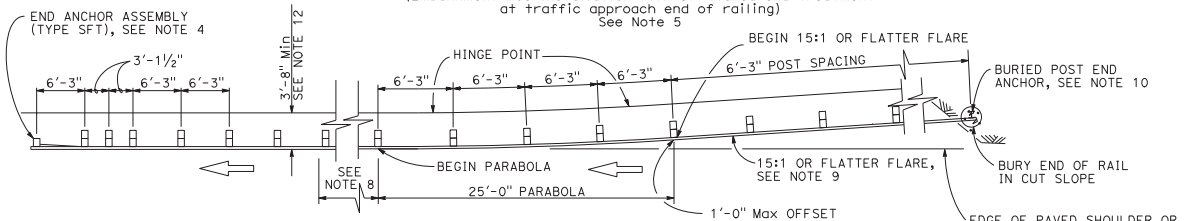

TYPE 11C LAYOUT

(Embankment MGS installation with buried end anchor treatment at traffic approach end of railing)
See Notes 5 and 11

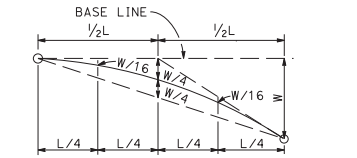

TYPICAL PARABOLIC LAYOUT

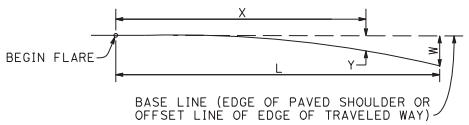

$$Y = \frac{WX^2}{L^2}$$

Y = OFFSET FROM BASE LINE
W = MAXIMUM OFFSET
X = DISTANCE ALONG BASE LINE
L = LENGTH OF FLARE

PARABOLIC FLARE OFFSETS

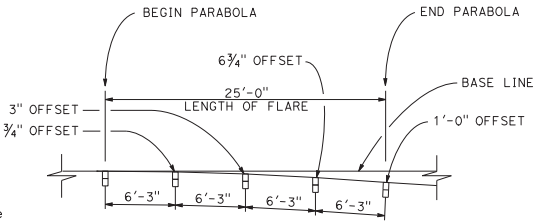

TYPICAL FLARE OFFSETS FOR 1 FOOT Max END OFFSET

NOTES:

1. Line post, blocks and hardware to be used are shown on Revised Standard Plans RSP A77L1, RSP A77L2, RSP A77N1, Standard Plans A77N2 and A77M1.
2. MGS post spacing to be 6'-3" center to center, except as otherwise noted.
3. Except as noted, line posts are 6" x 8" x 6'-0" wood with 6" x 8" x 1'-2" wood blocks. W6 x 8.5 or W6 x 9 steel posts, 6'-0" in length, with 6" x 8" x 1'-2" notched wood blocks or recycled plastic blocks may be used for 6" x 8" x 6'-0" wood post with 6" x 8" x 1'-2" wood blocks where applicable and when specified.
4. For End Anchor Assembly (Type SFT) details, see Standard Plan A77S1.
5. Layout Types 11A, 11B or 11C are typically used where MGS is recommended to shield embankment slopes and a crashworthy end treatment is required for only one direction of traffic.
6. 31" in-line terminal system end treatments are used where site conditions will not accommodate a flared end treatment.
7. The type of 31" terminal system end treatment to be used will be shown on the Project Plans.
8. Dependent on site conditions (embankment height and side slope), construction of additional MGS (length equal to multiples of 12'-6" with 6'-3" post spacing) may be advisable.
9. The 15:1 or flatter flare used with buried end anchors is based on the edge of the paved shoulder or offset line of edge of the traveled way. The length of MGS within the 15:1 or flatter flare is based on site conditions and should be a length equal to multiples of 12'-6".
10. For details of the buried post end anchor used with Type 11C Layout, see Standard Plan A77T2.
11. Where placement of dike is required with MGS installations, see Standard Plan A77N4 for dike positioning details.
12. Use this offset for 8-inch block. For 12-inch block, use 4'-0" Min offset.

Dist	COUNTY	ROUTE	POST MILES TOTAL PROJECT	SHEET No.	TOTAL SHEETS

Randell D. Hiatt
REGISTERED CIVIL ENGINEER

October 18, 2019
PLANS APPROVAL DATE

REGISTERED PROFESSIONAL ENGINEER
Randell D. Hiatt
No. C50200
Exp. 6-30-21
CIVIL
STATE OF CALIFORNIA

THE STATE OF CALIFORNIA OR ITS OFFICERS OR AGENTS SHALL NOT BE RESPONSIBLE FOR THE ACCURACY OR COMPLETENESS OF SCANNED COPIES OF THIS PLAN SHEET.

TO ACCOMPANY PLANS DATED _____

STATE OF CALIFORNIA
DEPARTMENT OF TRANSPORTATION

MIDWEST GUARDRAIL SYSTEM TYPICAL LAYOUTS FOR EMBANKMENTS

NO SCALE

RSP A77P1 DATED OCTOBER 18, 2019 SUPERSEDES STANDARD PLAN A77P1 DATED MAY 31, 2018 - PAGE 80 OF THE STANDARD PLANS BOOK DATED 2018.

REVISED STANDARD PLAN RSP A77P1

2018 REVISED STANDARD PLAN RSP A77P1

6-17-19

© 2020 California Department of Transportation
All Rights Reserved

Dist	COUNTY	ROUTE	POST MILES TOTAL PROJECT	SHEET No.	TOTAL SHEETS

Randell D. Hiatt
REGISTERED CIVIL ENGINEER

April 17, 2020
PLANS APPROVAL DATE

REGISTERED PROFESSIONAL ENGINEER — Randell D. Hiatt — No. C50200 — Exp. 6-30-21 — CIVIL — STATE OF CALIFORNIA

THE STATE OF CALIFORNIA OR ITS OFFICERS OR AGENTS SHALL NOT BE RESPONSIBLE FOR THE ACCURACY OR COMPLETENESS OF SCANNED COPIES OF THIS PLAN SHEET.

TO ACCOMPANY PLANS DATED _____

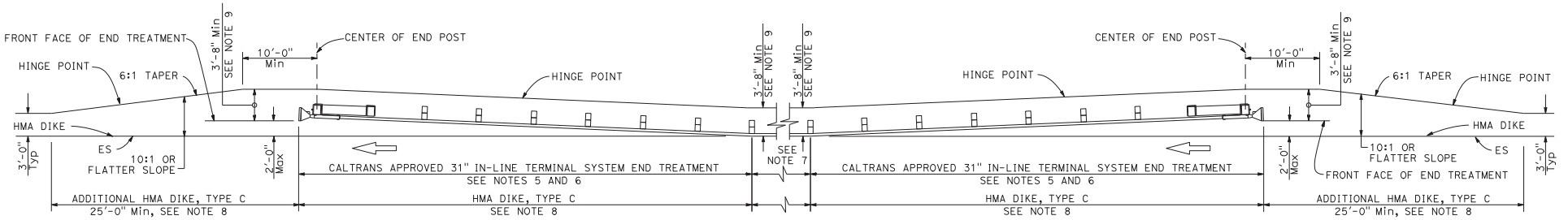

TYPE 11D LAYOUT

(Embankment MGS installation with
31" in-line end treatment at each end of railing)
See Note 4

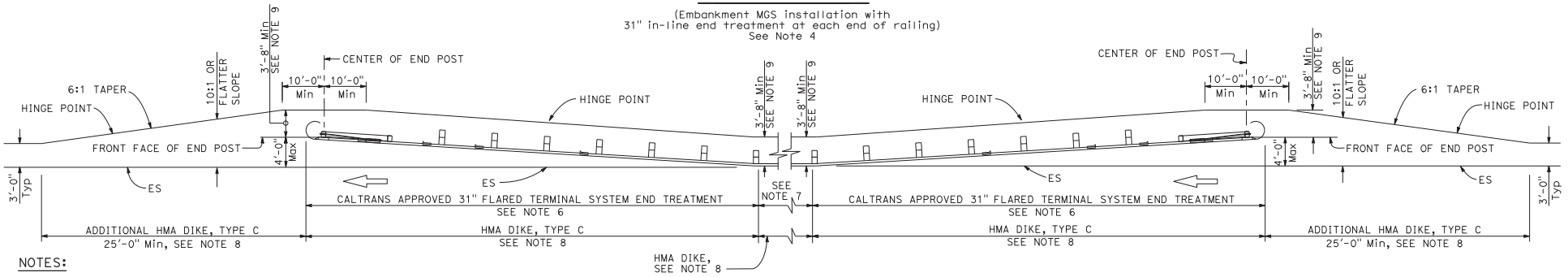

TYPE 11E LAYOUT

(Embankment MGS installation with
31" flared end treatment at each end of railing)
See Note 4

NOTES:

1. Line post, blocks and hardware to be used are shown on Revised Standard Plans RSP A77L1, RSP A77L2, RSP A77N1, Standard Plans A77N2 and A77M1.
2. MGS post spacing to be 6'-3" center to center, except as otherwise noted.
3. Except as noted, line posts are 6" x 8" x 6'-0" wood with 6" x 8" x 1'-2" wood blocks. W6 x 8.5 or W6 x 9 steel posts, 6'-0" in length, with 6" x 8" x 1'-2" notched wood blocks or plastic blocks may be used for 6" x 8" x 6'-0" wood post with 6" x 8" x 1'-2" wood blocks where applicable and when specified.
4. Layout Types 11D through 11L, shown on the A77P Series of Standard Plans, are typically used where MGS is recommended to shield embankment slopes and a crashworthy 31" end treatment is required for both directions of traffic.
5. 31" in-line terminal system end treatments are used where site conditions will not accommodate a flared end treatment.
6. The type of 31" terminal system end treatment to be used will be shown on the Project Plans.
7. Dependent on site conditions (embankment height and side slope), construction of additional MGS (length equal to multiples of 12'-6" with 6'-3" post spacing) may be advisable.
8. Where placement of dike is required with MGS installations, see Standard Plan A77N4 for dike positioning details.
9. Use this offset for 8-inch block. For 12-inch block, use 4'-0" Min offset.

STATE OF CALIFORNIA
DEPARTMENT OF TRANSPORTATION

MIDWEST GUARDRAIL SYSTEM TYPICAL LAYOUTS FOR EMBANKMENTS

NO SCALE

RSP A77P2 DATED APRIL 17, 2020 SUPERSEDES RSP A77P2 DATED OCTOBER 18, 2019 AND STANDARD PLAN A77P2 DATED MAY 31, 2018 - PAGE 81 OF THE STANDARD PLANS BOOK DATED 2018.

REVISED STANDARD PLAN RSP A77P2

12-10-19

2018 REVISED STANDARD PLAN RSP A77P2

© 2019 California Department of Transportation
All Rights Reserved

Dist	COUNTY	ROUTE	POST MILES TOTAL PROJECT	SHEET No.	TOTAL SHEETS

Randell D. Hiatt
REGISTERED CIVIL ENGINEER

October 18, 2019
PLANS APPROVAL DATE

Registered Professional Engineer — Randell D. Hiatt — No. C50200 — Exp. 6-30-21 — CIVIL — State of California

THE STATE OF CALIFORNIA OR ITS OFFICERS OR AGENTS SHALL NOT BE RESPONSIBLE FOR THE ACCURACY OR COMPLETENESS OF SCANNED COPIES OF THIS PLAN SHEET.

TO ACCOMPANY PLANS DATED _____

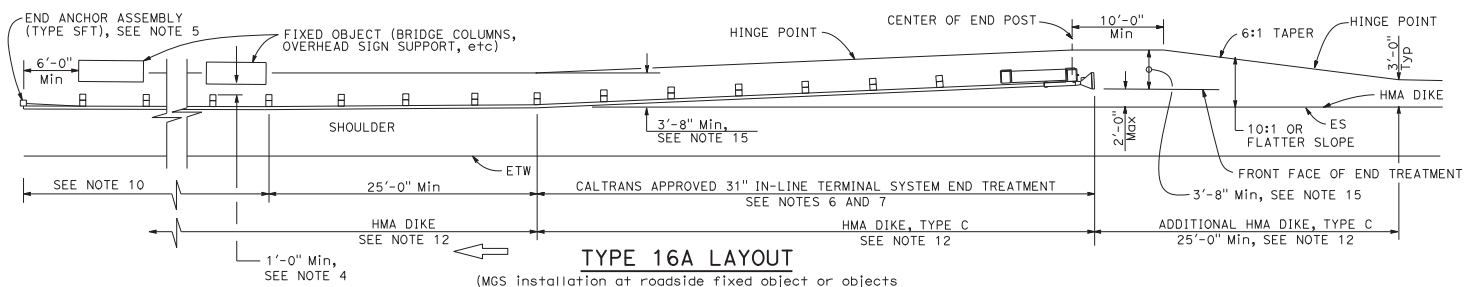

TYPE 16A LAYOUT

(MGS installation at roadside fixed object or objects with 31" in-line end treatment at traffic approach end of railing)
See Notes 11 and 12

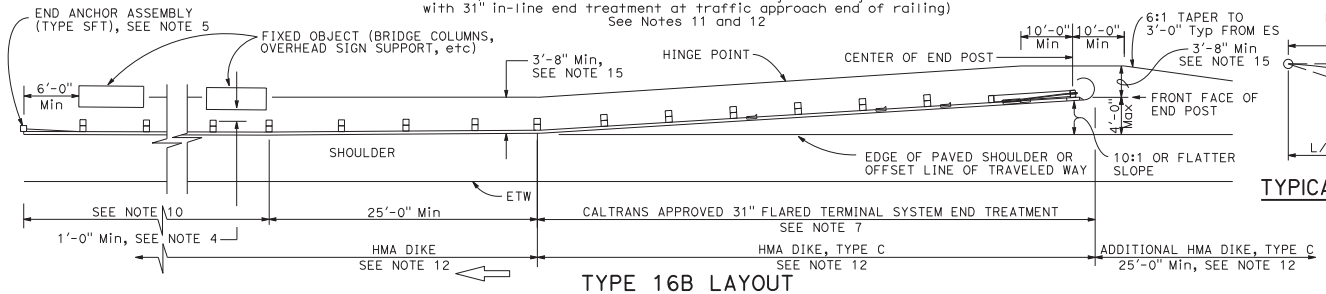

TYPE 16B LAYOUT

(MGS installation at roadside fixed object or objects with 31' flared end treatment at traffic approach end of railing)
See Notes 11 and 12

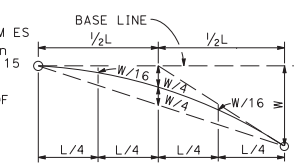

TYPICAL PARABOLIC LAYOUT

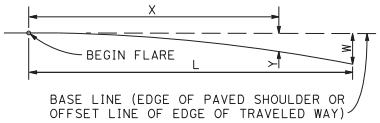

$Y = \frac{WX^2}{L^2}$

Y = OFFSET FROM BASE LINE
W = MAXIMUM OFFSET
X = DISTANCE ALONG BASE LINE
L = LENGTH OF FLARE

PARABOLIC FLARE OFFSETS

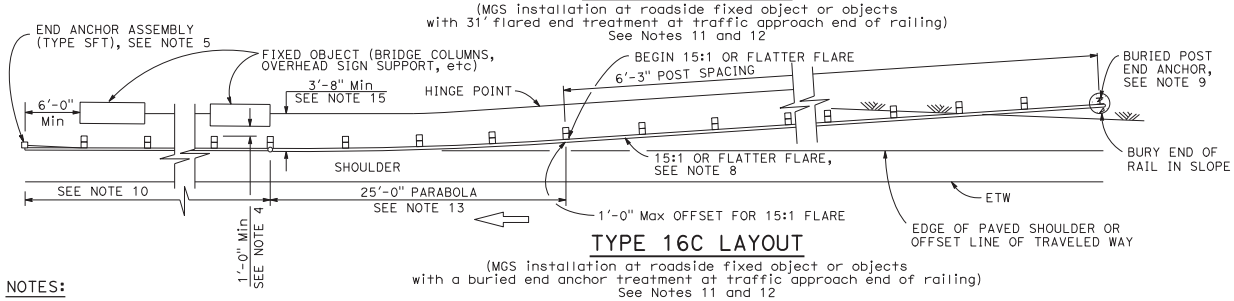

TYPE 16C LAYOUT

(MGS installation at roadside fixed object or objects with a buried end anchor treatment at traffic approach end of railing)
See Notes 11 and 12

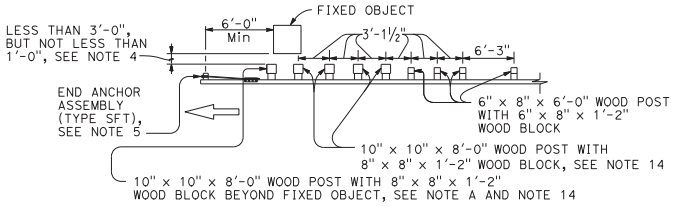

NOTE A: For a series of fixed objects (bridge columns, overhead sign supports, etc.) additional 10" x 10" x 8'-0" wood post with 8" x 8" x 1'-2" wood blocks at 3'-1½" center to center spacing are to be used between fixed objects.

STRENGTHENED MIDWEST GUARDRAIL SYSTEM SECTIONS FOR FIXED OBJECT

Use strengthened MGS sections with Types 16A, 16B or 16C layouts where minimum clearance between the back of post and the fixed object(s) is less than 3'-0", but not less than 1'-0". See Note 4.

NOTES:

1. Line post, blocks and hardware to be used are shown on Revised Standard Plans RSP A77L1, RSP A77L2, RSP A77N1, Standard Plans A77N2 and A77M1.
2. MGS post spacing to be 6'-3" center to center, except as otherwise noted.
3. Except as noted, line posts are 6" x 8" x 6'-0" wood with 6" x 8" x 1'-2" wood blocks. W6 x 8.5 or W6 x 9 steel posts, 6'-0" in length, with 6" x 8" x 1'-2" notched wood blocks or notched recycled plastic blocks may be used for 6" x 8" x 6'-0" wood line posts with 6" x 8" x 1'-2" wood blocks where applicable and when specified.
4. A 4'-0" minimum clearance is required between the face of the railing and the face of a fixed object located directly behind MGS sections with post spacing of 6'-3". Construct MGS as shown in the detail "Strengthened Midwest Guardrail System Sections for Fixed Object" on this plan, where the clearance between the back of post and the face of a fixed object is less than 3'-0", but not less than 1'-0". Where the clearance is less than 1'-0", a concrete wall or barrier should be constructed to shield the fixed object(s).
5. For End Anchor Assembly (Type SFT) details, see Standard Plan A77S1.
6. 31" in-line terminal system end treatments are used where site conditions will not accommodate a 31" flared end treatment.
7. The type of 31" terminal system to be used will be shown on the Project Plans.
8. The 15:1 or flatter flare used with Type 16C Layout is based on the edge of the paved shoulder or offset line of edge of the traveled way. The length of MGS within the 15:1 or flatter flare is based on site conditions and should be a length equal to multiples of 12'-6".
9. For details of the Buried Post End Anchor used with Type 16C Layout, see Standard Plan A77T2.
10. As site conditions dictate, construct additional MGS to shield fixed object(s). Additional MGS length equal to multiples of 12'-6". Post spacing at 6'-3" except as specified in Note 4.
11. Layout Types 16A, 16B or 16C are typically used where MGS is recommended to shield roadside fixed object(s) and a crashworthy 31" end treatment is required for only one direction of traffic.
12. Where placement of dike is required with MGS, see Standard Plan A77N4 for dike positioning details.
13. Offset of 1'-0", see Revised Standard Plan RSP A77P1.
14. W6 x 8.5 or W6 x 9 steel post, 8'-0" in length, with 8" x 8" x 1'-2" notched wood block or notched recycled plastic block may be used in place of the 10" x 10" x 8'-0" wood post with 8" x 8" x 1'-2" wood block shown in the detail "Strengthened Midwest Guardrail System Sections for Fixed Object".
15. Use this offset for 8" block. For 12" block use minimum 4'-0" offset.

STATE OF CALIFORNIA
DEPARTMENT OF TRANSPORTATION

MIDWEST GUARDRAIL SYSTEM TYPICAL LAYOUTS FOR ROADSIDE FIXED OBJECTS

NO SCALE

RSP A77R3 DATED OCTOBER 18, 2019 SUPERSEDES RSP A77R3 DATED APRIL 19, 2019 AND STANDARD PLAN A77R3 DATED MAY 31, 2018 - PAGE 93 OF THE STANDARD PLANS BOOK DATED 2018.

REVISED STANDARD PLAN RSP A77R3

2018 REVISED STANDARD PLAN RSP A77R3

6-19-19

© 2019 California Department of Transportation
All Rights Reserved

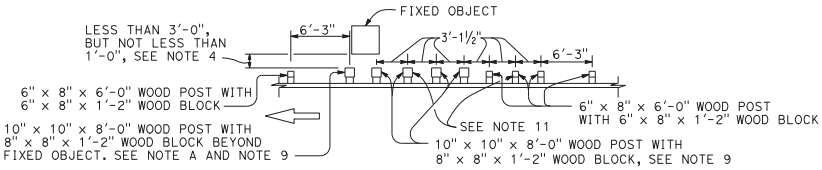

NOTE A:

For a series of fixed objects (bridge columns, overhead sign supports, etc.) additional 10" x 10" x 8'-0" wood post with 8" x 8" x 1'-2" wood blocks at 3'-1½" center to center spacing are to be used between fixed object(s).

Dist	COUNTY	ROUTE	POST MILES TOTAL PROJECT	SHEET No.	TOTAL SHEETS

Randell D. Hiatt
REGISTERED CIVIL ENGINEER

October 18, 2019
PLANS APPROVAL DATE

REGISTERED PROFESSIONAL ENGINEER — Randell D. Hiatt — No. C50200 — Exp. 6-30-21 CIVIL — STATE OF CALIFORNIA

THE STATE OF CALIFORNIA OR ITS OFFICERS OR AGENTS SHALL NOT BE RESPONSIBLE FOR THE ACCURACY OR COMPLETENESS OF SCANNED COPIES OF THIS PLAN SHEET.

TO ACCOMPANY PLANS DATED _____

STRENGTHENED MIDWEST GUARDRAIL SYSTEM SECTIONS FOR FIXED OBJECT

Use strengthened MGS sections with layout Types 16D or 16E where minimum clearance between the back of post and the fixed object(s) is less than 3'-0", but not less than 1'-0". See Note 4.

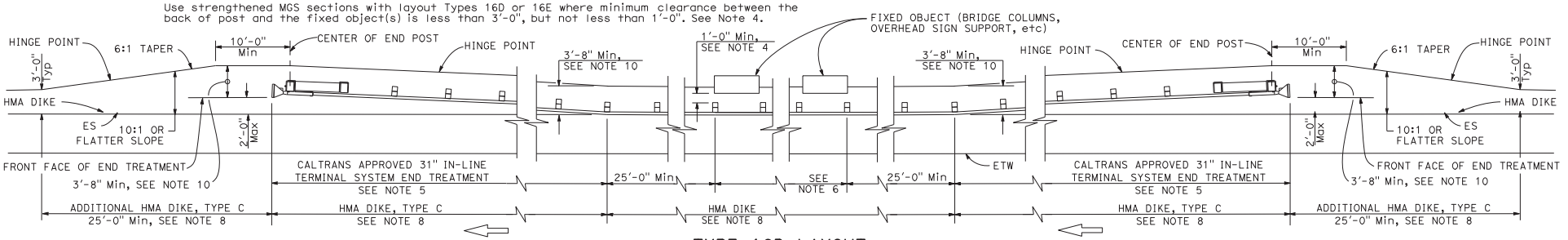

TYPE 16D LAYOUT

(Guard railing installation at roadside fixed object or objects with 31" in-line end treatment at each end of railing) See Note 7

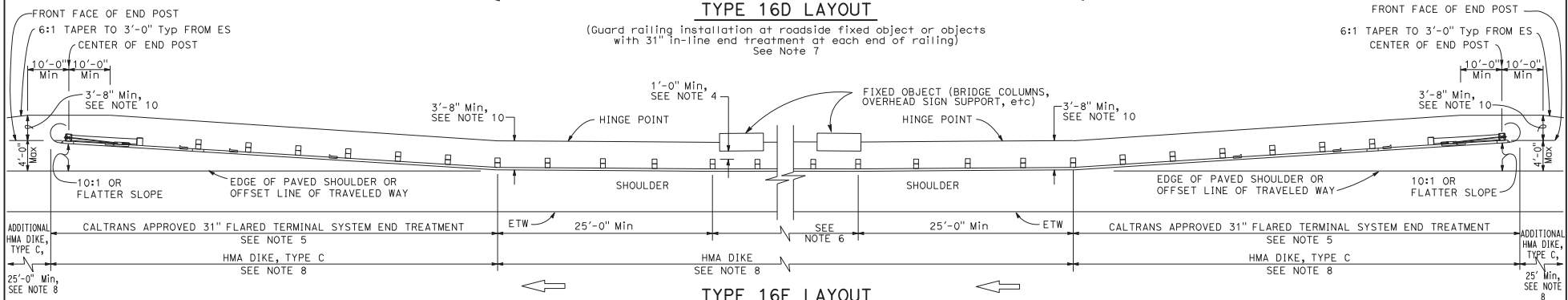

TYPE 16E LAYOUT

(MGS installation at roadside fixed object or objects with 31" in-line end treatment at each end of railing) See Note 7

NOTES:

1. Line post, blocks and hardware to be used are shown on Revised Standard Plans RSP A77L1, RSP A77L2, RSP A77N1, Standard Plans A77N2 and A77M1.
2. MGS post spacing to be 6'-3" center to center, except as otherwise noted.
3. Except as noted, line posts are 6" x 8" x 6'-0" wood with 6" x 8" x 1'-2" wood blocks. W6 x 8.5 or W6 x 9 steel posts, 6'-0" in length, with 6" x 8" x 1'-2" notched wood blocks or notched recycled plastic blocks may be used for 6" x 8" x 6'-0" wood line posts with 6" x 8" x 1'-2" wood blocks where applicable and when specified.
4. A 4'-0" minimum clearance is required between the face of the railing and the face of a fixed object located directly behind MGS sections with post spacing at 6'-3". Construct MGS as shown in the detail "Strengthened Midwest Guardrail System Sections for Fixed Object" on this plan, where the clearance between the back of post and the face of a fixed object is less than 3'-0", but not less than 1'-0". Where the clearance is less than 1'-0", a concrete wall or barrier should be constructed to shield the fixed object(s).
5. The type of 31" terminal system to be used will be shown on the Project Plans.
6. As site conditions dictate, construct additional MGS to shield fixed object(s). Additional MGS length equal to multiples of 12'-6". Post spacing at 6'-3", except as specified in Note 4.
7. Layout Types 16D through 16L, shown on the A77R Series of Standard Plans, are typically used where MGS is recommended to shield roadside fixed object(s) and a crashworthy 31" end treatment is required for both directions of traffic.
8. Where placement of dike is required with MGS, see Revised Standard Plan RSP A77N4 for dike positioning details.
9. W6 x 8.5 or W6 x 9 steel post, 8'-0" in length, with 8" x 8" x 1'-2" notched wood block or notched recycled plastic block may be used in place of the 10" x 10" x 8'-0" wood post with 8" x 8" x 1'-2" wood block shown in the detail "Strengthened Midwest Guardrail System Sections for Fixed Object".
10. Use this offset for 8" block. For 12" block use minimum 4'-0" offset.
11. Do not bolt rail to block. Only bolt block to post.

STATE OF CALIFORNIA
DEPARTMENT OF TRANSPORTATION

MIDWEST GUARDRAIL SYSTEM TYPICAL LAYOUTS FOR ROADSIDE FIXED OBJECTS

NO SCALE

RSP A77R4 DATED OCTOBER 18, 2019 SUPERSEDES RSP A77R4 DATED APRIL 19, 2019 AND STANDARD PLAN A77R4 DATED MAY 31, 2018 - PAGE 94 OF THE STANDARD PLANS BOOK DATED 2018.

REVISED STANDARD PLAN RSP A77R4

2018 REVISED STANDARD PLAN RSP A77R4

6-19-19

© 2019 California Department of Transportation
All Rights Reserved

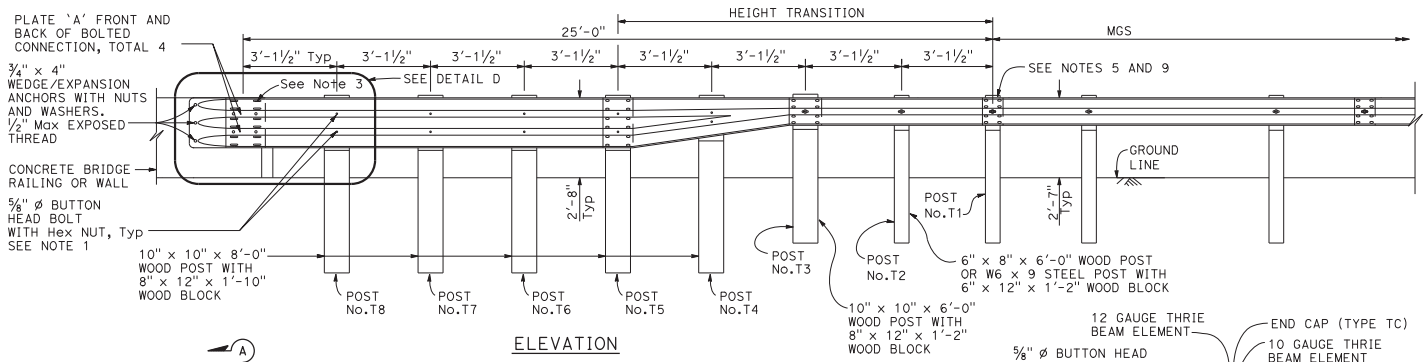

ELEVATION

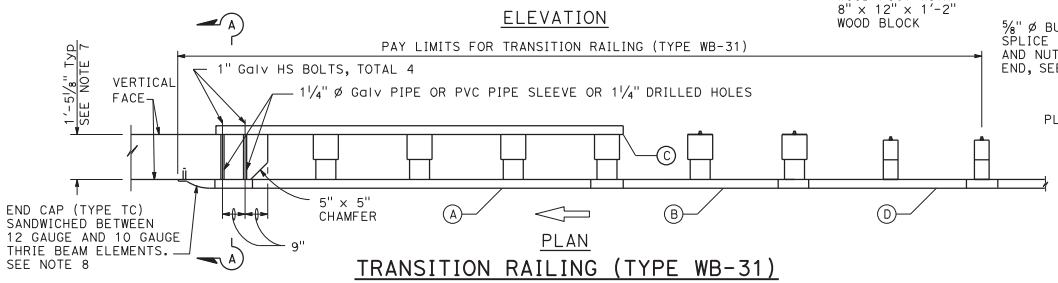

PLAN

TRANSITION RAILING (TYPE WB-31)

(No Blockout Attachment)

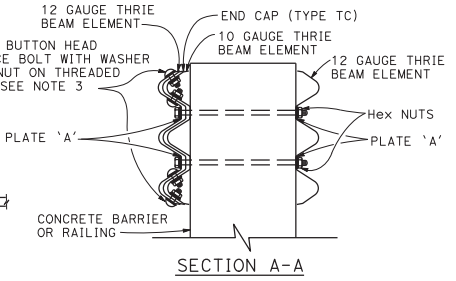

SECTION A-A

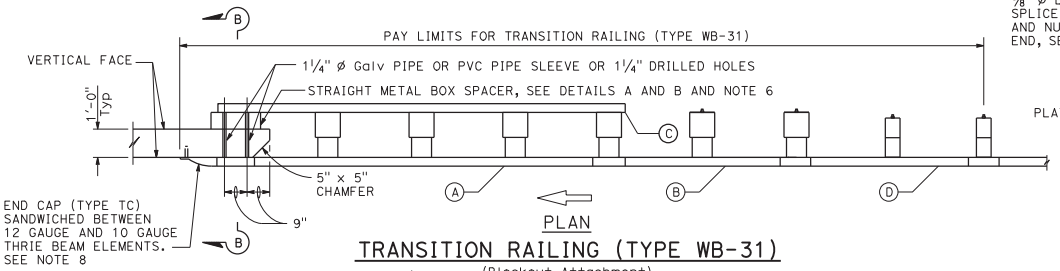

PLAN

TRANSITION RAILING (TYPE WB-31)

(Blockout Attachment)

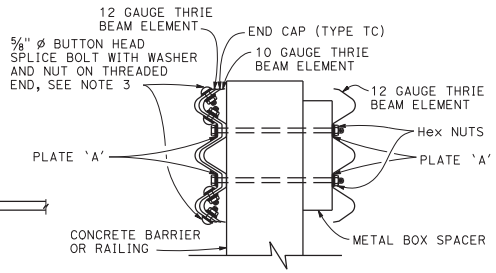

SECTION B-B

LEGEND:

- (A) NESTED THRIE BEAM ELEMENTS (ONE 12 GAUGE ELEMENT NESTED OVER ONE 10 GAUGE ELEMENT).
- (B) ONE ASYMMETRICAL 10 GAUGE "W" BEAM TO THRIE BEAM ELEMENT.
- (C) ONE 12 GAUGE THRIE BEAM ELEMENT.
- (D) ONE 10 GAUGE "W" BEAM RAIL ELEMENT (7'-3½"LENGTH)

10 GAUGE = 0.138" THICK
12 GAUGE = 0.108" THICK

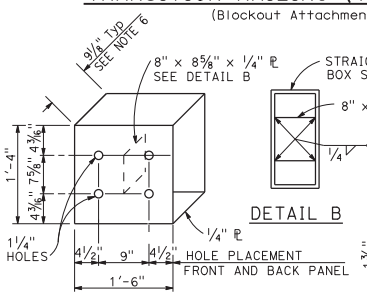

DETAIL A

DETAIL B

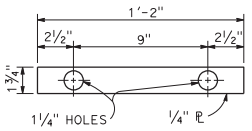

DETAIL C

STRAIGHT METAL BOX SPACER

PLATE 'A'

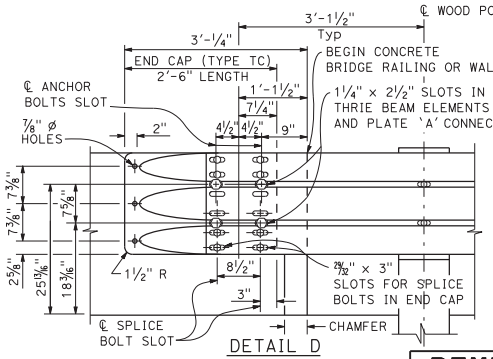

DETAIL D

NOTES:

TO ACCOMPANY PLANS DATED _____

1. Use ⅝" ø Button head bolts and hex nuts for connections to posts. No washer on rail face for bolted connections to post.
2. The nested rail elements, end cap, and 'W' beam to thrie beam element may be spliced together prior to bolting the elements to the wood post and concrete barrier or railing.
3. Exterior splice bolt holes for rail element splices at Post No. T5 and the connection to the concrete barrier or railing shall be the standard 29/32" x 1⅛" slot size. Interior splice bolt holes at these locations may be increased up to 1¼" ø. Only the top 4 and the bottom 4 splice bolts with washers and nuts are required for rail splices at Post No. T5 and the connection to the concrete barrier or railing.
4. The top elevation of Posts No. T2 through No. T7 shall not project more than 1" above the top elevation of the rail element.
5. Typically, the railing connected to Transition Railing (Type WB-31) will be either standard railing section of MGS with height transition ratio of 150:1 or a Caltrans approved 31" end treatment attached to Post No. T1.
6. The depth of the metal box spacer varies from the 9⅛" to 1½" and is dependent on the width of the concrete railing or wall. The combined dimension for the depth of the metal box spacer plus the width of railing or wall is typically 21⅛". Where the space between the backside of the concrete railing or wall and the rear thrie beam element is less than 1½", metal plates similar to Plate 'A' are to be used as spacers.
7. Where the width of the concrete railing or wall is greater than 17⅛", wood blocks are to be used to fill the space created between the backside of Posts No. T5 through No. T8 and the rear thrie beam element. These wood blocks shall be 8" in width and 1'-2" in length. The dimension between the front thrie beam element and the rear thrie beam element is to match the width of the concrete railing or wall.
8. End cap may be installed over 12 gauge and 10 gauge thrie beam elements where transition railing is installed on the departure end of bridge railing.
9. Conform standard railing section height to 31" at Post No. T1 using height transition ratio of 150:1. MGS tolerance at post No. T1 is ± 1".

Dist	COUNTY	ROUTE	POST MILES TOTAL PROJECT	SHEET No.	TOTAL SHEETS

Randell D. Hiatt
REGISTERED CIVIL ENGINEER

April 19, 2019
PLANS APPROVAL DATE

REGISTERED PROFESSIONAL ENGINEER — Randell D. Hiatt — No. C50200 — Exp. 6-30-19 — CIVIL — STATE OF CALIFORNIA

THE STATE OF CALIFORNIA OR ITS OFFICERS OR AGENTS SHALL NOT BE RESPONSIBLE FOR THE ACCURACY OR COMPLETENESS OF SCANNED COPIES OF THIS PLAN SHEET.

STATE OF CALIFORNIA
DEPARTMENT OF TRANSPORTATION

MIDWEST GUARDRAIL SYSTEM TRANSITION RAILING (TYPE WB-31)

NO SCALE

RSP A77U4 DATED APRIL 19, 2019 SUPERSEDES STANDARD PLAN A77U4
DATED MAY 31, 2018 - PAGE 107 OF THE STANDARD PLANS BOOK DATED 2018.

REVISED STANDARD PLAN RSP A77U4

2018 REVISED STANDARD PLAN RSP A77U4

12-11-18

© 2018 California Department of Transportation
All Rights Reserved

Dist	COUNTY	ROUTE	POST MILES TOTAL PROJECT	SHEET No.	TOTAL SHEETS

R. Valizadeh
REGISTERED CIVIL ENGINEER

October 19, 2018
PLANS APPROVAL DATE

THE STATE OF CALIFORNIA OR ITS OFFICERS OR AGENTS SHALL NOT BE RESPONSIBLE FOR THE ACCURACY OR COMPLETENESS OF SCANNED COPIES OF THIS PLAN SHEET.

REGISTERED PROFESSIONAL ENGINEER
W. Reza Valizadeh
No. C51902
Exp. 6-30-20
CIVIL
STATE OF CALIFORNIA

TO ACCOMPANY PLANS DATED _____

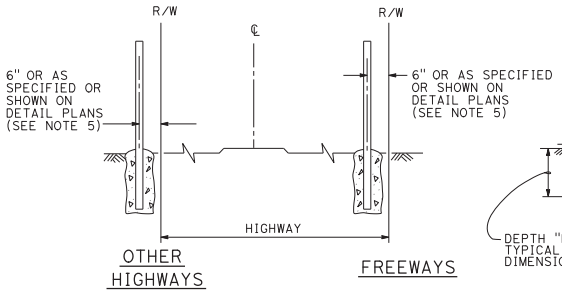

FENCE LOCATION

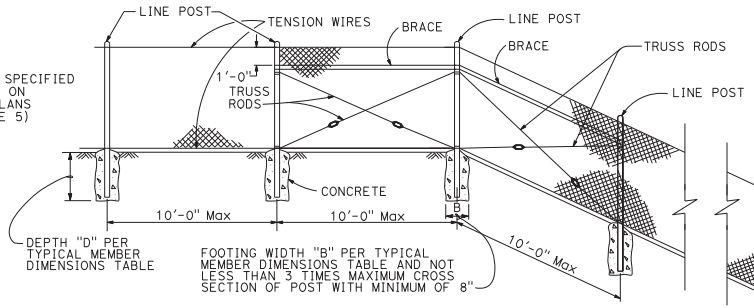

CHAIN LINK FENCE ON SHARP BREAK IN GRADE

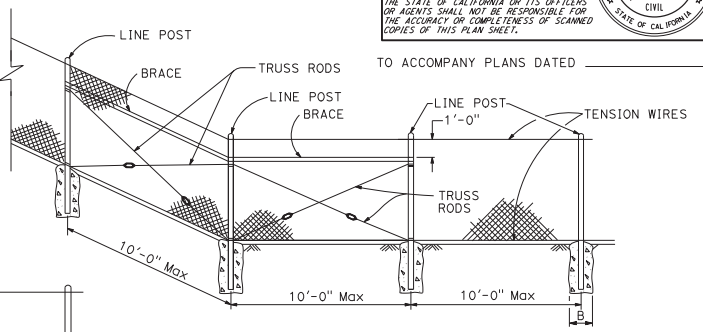

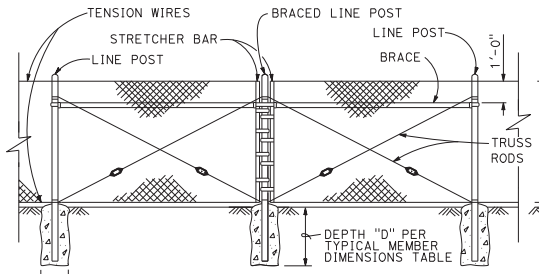

BRACED LINE POST INSTALLATION

Braced line post at intervals not exceeding 1000'

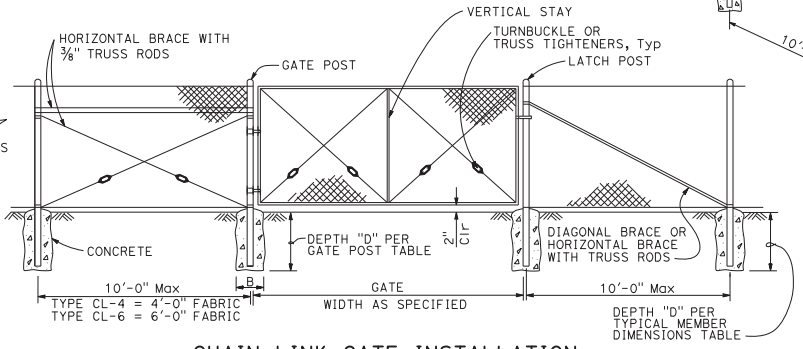

CHAIN LINK GATE INSTALLATION

Maximum Gate Width is 12'-0"
Vertical Stay is required in middle of gate greater than 8'-0" in width.

GATE POST

FENCE HEIGHT (Max)	SLATTED	B (in)	D (ft)	ROUND PIPE		
				ROUND OD PIPE	GROUP 1A WEIGHT (lb/ft)	GROUP 1C WEIGHT (lb/ft)
5'-0"	NO	12"	2'-6"	3.50"	7.58	5.71
6'-0"	NO	12"	2'-6"	3.50"	7.58	5.71
8'-0"	NO	12"	3'-0"	3.50"	7.58	5.71
10'-0"	NO	14"	3'-6"	3.50"	7.58	5.71
5'-0"	YES	12"	3'-0"	4.00"	9.12	6.56
6'-0"	YES	14"	3'-6"	4.50"	10.80	-
8'-0"	YES	18"	3'-6"	5.56"	14.60	-
10'-0"	YES	20"	4'-0"	6.63"	19.00	-

Above post dimensions and weights are minimums.
Larger sizes may be used upon approval.

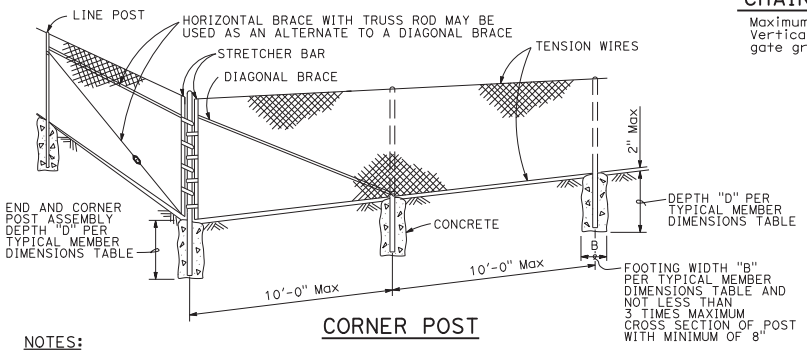

CORNER POST

TYPICAL MEMBER DIMENSIONS (See Notes)

FENCE HEIGHT (Max)	SLATTED	B (in)	D (ft)	LINE POSTS					BRACES				
				ROUND PIPE			ROLL FORMED		ROUND PIPE			ROLL FORMED	
				ROUND OD PIPE	GROUP 1A WEIGHT (lb/ft)	GROUP 1C WEIGHT (lb/ft)	SECTION	WEIGHT (lb/ft)	ROUND OD PIPE	GROUP 1A WEIGHT (lb/ft)	GROUP 1C WEIGHT (lb/ft)	SECTION	WEIGHT (lb/ft)
5'-0"	NO	8"	2'-6"	1.90"	2.72	2.28	1.875" x 1.625"	1.85	1.90"	2.72	2.28	1.625" x 1.250"	1.35
6'-0"	NO	10"	2'-6"	2.38"	3.66	3.12	1.875" x 1.625"	2.40	2.38"	3.66	3.12	1.625" x 1.250"	1.35
8'-0"	NO	12"	3'-0"	2.88"	5.80	4.64	3.250" x 2.500"	4.50	2.38"	3.66	3.12	1.625" x 1.250"	1.35
10'-0"	NO	14"	3'-6"	3.50"	7.58	5.71	3.250" x 2.500"	4.50	2.88"	5.80	4.64	1.625" x 1.250"	1.35
5'-0"	YES	12"	3'-0"	4.00"	9.12	6.56	N/A	-	2.38"	3.66	3.12	N/A	-
6'-0"	YES	14"	3'-0"	4.50"	10.80	-	N/A	-	2.38"	3.66	3.12	N/A	-
8'-0"	YES	18"	3'-6"	5.56"	14.60	-	N/A	-	2.38"	3.66	3.12	N/A	-
10'-0"	YES	20"	4'-0"	6.63"	19.00	-	N/A	-	2.88"	5.80	4.64	N/A	-

NOTES:

1. The table to the right shows minimum sized posts and braces complying with the specifications. Larger or heavier post and brace sizes may be used upon approval.
2. Sections shown in the tables must also comply with the strength requirements and other provisions of the Specifications.
3. Other sections which comply with the strength requirements and other provisions of the Specifications may be used upon approval.
4. Options exercised shall be uniform on any one project.
5. Offset to be 2'-0" at monument locations, measured at right angles to R/W lines. Taper to achieve offset to be at least 20'-0" long.
6. See Standard Plan A85B for Brace, Stretcher Bar, and Truss Tightener Details.

STATE OF CALIFORNIA
DEPARTMENT OF TRANSPORTATION

CHAIN LINK FENCE

NO SCALE

RSP A85 DATED OCTOBER 19, 2018 SUPERSEDES STANDARD PLAN A85
DATED MAY 31, 2018 - PAGE 140 OF THE STANDARD PLANS BOOK DATED 2018.

REVISED STANDARD PLAN RSP A85

2018 REVISED STANDARD PLAN RSP A85

2-1-18

© 2018 California Department of Transportation
All Rights Reserved

BRIDGE DESIGNATIONS AND ABBREVIATIONS

See Standard Plans A3A, A3B, and A3C for additional or standard abbreviations

J	Outer, outer left bridge
K	Outer left bridge
S	Outer right bridge
T	Outer, outer right bridge
RWLOL	Retaining Wall Layout Line
WWLOL	Wingwall Layout Line

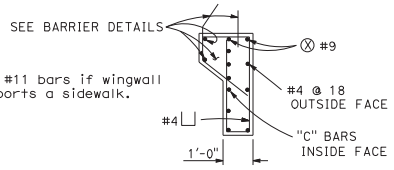

Ⓧ Use #11 bars if wingwall supports a sidewalk.

SECTION J-J
Without overhang

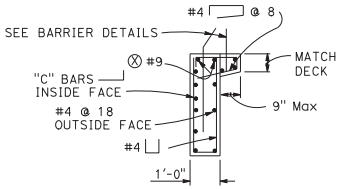

SECTION J-J
With overhang

Dist	COUNTY	ROUTE	POST MILES TOTAL PROJECT	SHEET No.	TOTAL SHEETS

Peter W. Norboe
REGISTERED CIVIL ENGINEER

October 19, 2018
PLANS APPROVAL DATE

REGISTERED PROFESSIONAL ENGINEER — Peter W. Norboe — No. C57519 — Exp. 12-31-19 CIVIL — STATE OF CALIFORNIA

THE STATE OF CALIFORNIA OR ITS OFFICERS OR AGENTS SHALL NOT BE RESPONSIBLE FOR THE ACCURACY OR COMPLETENESS OF SCANNED COPIES OF THIS PLAN SHEET.

TO ACCOMPANY PLANS DATED _____

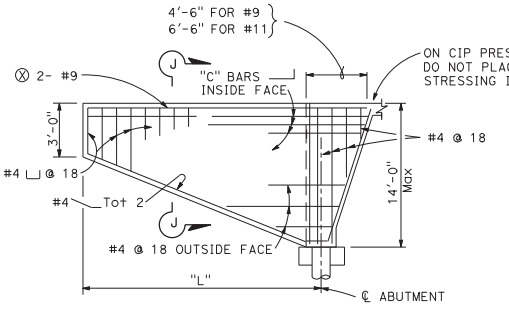

ELEVATION
SLOPING ABUTMENT

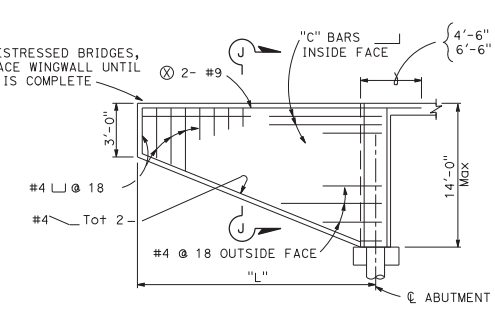

ELEVATION
VERTICAL ABUTMENT

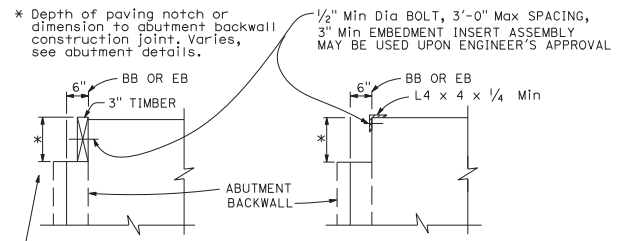

TEMPORARY BUMPERS
BRIDGE DETAIL 1-2

ALTERNATIVE 1 ALTERNATIVE 2

TOP OF BUMPER TO BE AT OR ABOVE THE TOP OF DECK CONCRETE. BUMPERS AND BOLTS TO BE REMOVED IMMEDIATELY PRIOR TO PLACING APPROACH PAVEMENT

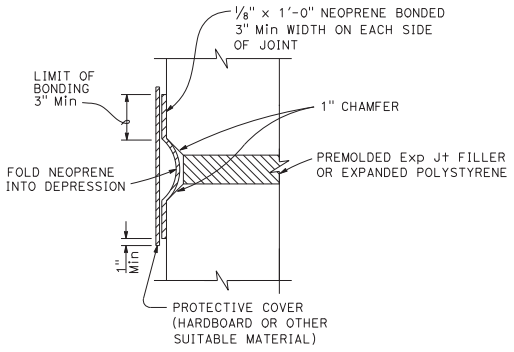

BRIDGE DETAIL 1-3
STRIP WATERSTOP DETAIL

When used on CIP prestressed bridges, do not apply waterstop until stressing is complete.

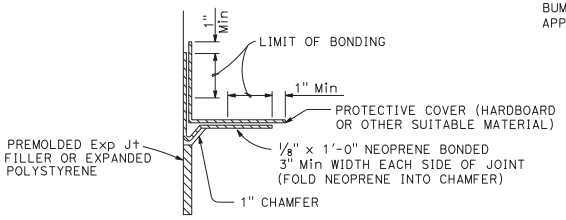

BRIDGE DETAIL 1-4
STRIP WATERSTOP CORNER DETAIL

When used on CIP prestressed bridges, do not apply waterstop until stressing is complete.

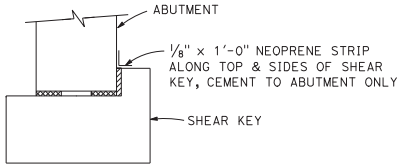

BRIDGE DETAIL 1-6
SHEAR KEY JOINT PROTECTION

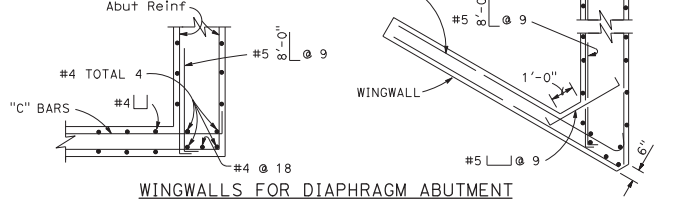

WINGWALLS FOR DIAPHRAGM ABUTMENT
BRIDGE DETAIL 1-5

CORNER DETAIL
FOR SKEW 20° AND LESS

CORNER DETAIL
FOR SKEW OVER 20°

"L"	"C" BARS
12'-0"	#5 @ 9"
14'-0"	#6 @ 9"
16'-0"	#7 @ 9"
18'-0"	#8 @ 9"
20'-0"	#9 @ 9"

STATE OF CALIFORNIA
DEPARTMENT OF TRANSPORTATION

BRIDGE DETAILS

NO SCALE

RSP D83B DATED OCTOBER 19, 2018 SUPERSEDES STANDARD PLAN D83B DATED MAY 31, 2018 - PAGE 318 OF THE STANDARD PLANS BOOK DATED 2018.

REVISED STANDARD PLAN RSP B0-1

2018 REVISED STANDARD PLAN RSP B0-1

5-21-18

© 2019 California Department of Transportation
All Rights Reserved

Dist	COUNTY	ROUTE	POST MILES TOTAL PROJECT	SHEET No.	TOTAL SHEETS

REGISTERED CIVIL ENGINEER

October 18, 2019
PLANS APPROVAL DATE

REGISTERED PROFESSIONAL ENGINEER
C.J. Sims
No. C46471
Exp. 6-30-21
CIVIL
STATE OF CALIFORNIA

THE STATE OF CALIFORNIA OR ITS OFFICERS OR AGENTS SHALL NOT BE RESPONSIBLE FOR THE ACCURACY OR COMPLETENESS OF SCANNED COPIES OF THIS PLAN SHEET.

TO ACCOMPANY PLANS DATED _____

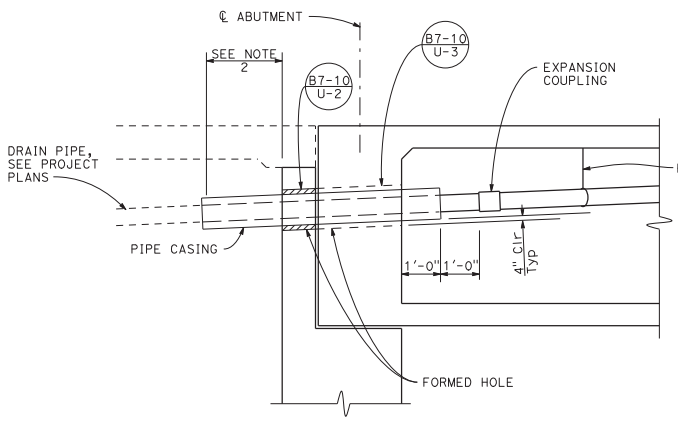

ABUTMENT

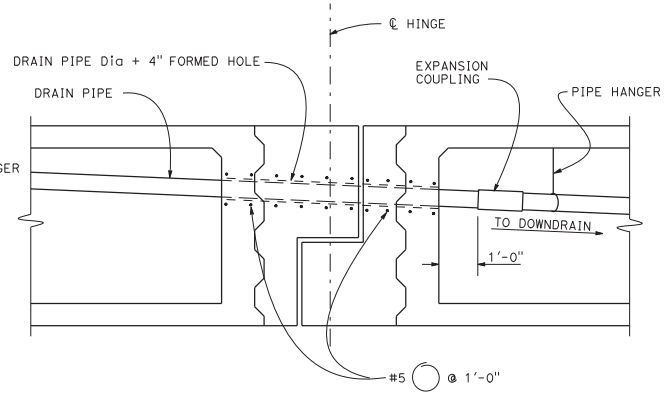

HINGE

DECK DRAIN PIPE DETAIL

NOTES:

1. Pipe casing OD = Drain pipe Dia + 4" (¼" Min wall thickness)
2. Unless otherwise shown on Project Plans, casing shall extend to the greater of 5'-0" beyond the end of approach slab or 20'-0" beyond the back of abutment.

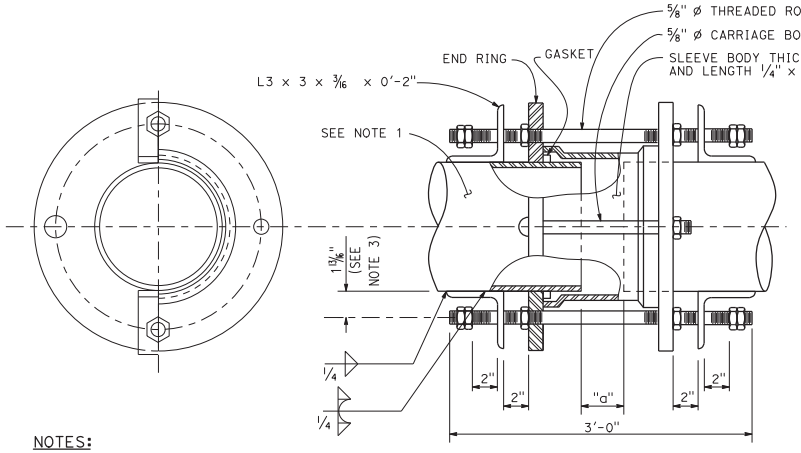

NOTES:

1. For "a" dimension and pipe diameter, see Project Plans.
2. Expansion coupling with 4 bolts shown. Coupling with a greater number of bolts allowed.
3. Adjust dimension to suit coupler end ring bolt circle.

EXPANSION COUPLING

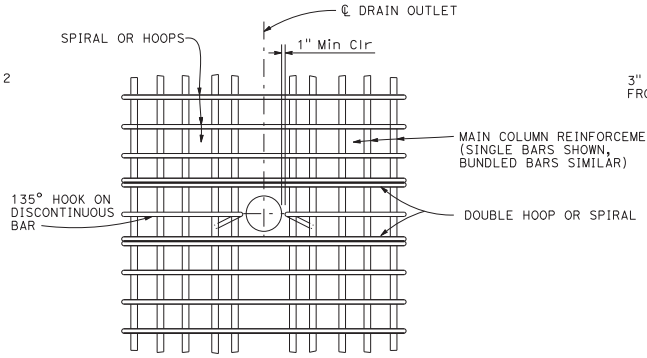

NOTE:
Adjust spacing of main column reinforcement to clear drain outlet.

COLUMN REINFORCEMENT AT DRAIN OUTLET

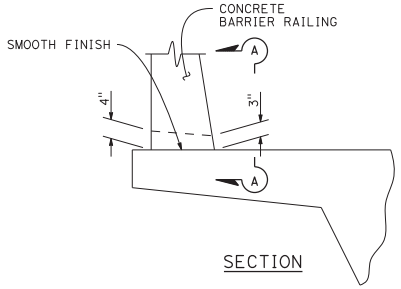

SECTION

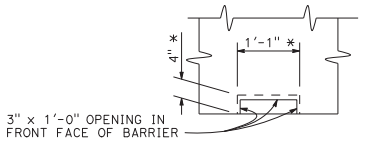

ELEVATION A-A

SCUPPER DETAIL

* At exterior face of barrier

STATE OF CALIFORNIA
DEPARTMENT OF TRANSPORTATION

DECK DRAINAGE DETAILS

NO SCALE

RSP B7-8 DATED OCTOBER 18, 2019 SUPERSEDES STANDARD PLAN B7-8 DATED MAY 31, 2018 - PAGE 348 OF THE STANDARD PLANS BOOK DATED 2018.

REVISED STANDARD PLAN RSP B7-8

2018 REVISED STANDARD PLAN RSP B7-8

7-11-19

© 2019 California Department of Transportation
All Rights Reserved

Dist	COUNTY	ROUTE	POST MILES TOTAL PROJECT	SHEET No.	TOTAL SHEETS

Peter W. Norboe
REGISTERED CIVIL ENGINEER

April 19, 2019
PLANS APPROVAL DATE

Peter W. Norboe No. C57519 Exp. 12-31-19 CIVIL — REGISTERED PROFESSIONAL ENGINEER — STATE OF CALIFORNIA

THE STATE OF CALIFORNIA OR ITS OFFICERS OR AGENTS SHALL NOT BE RESPONSIBLE FOR THE ACCURACY OR COMPLETENESS OF SCANNED COPIES OF THIS PLAN SHEET.

TO ACCOMPANY PLANS DATED _____

ABUTMENT DIAPHRAGMS

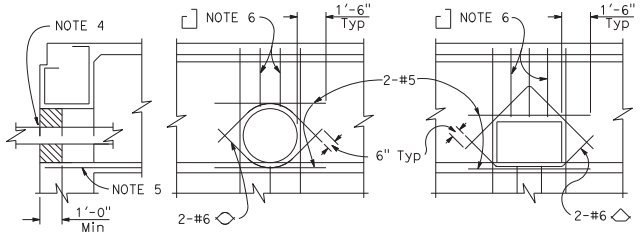

DETAIL U-1

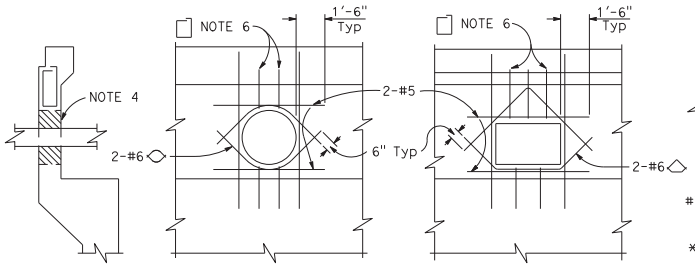

DETAIL U-2

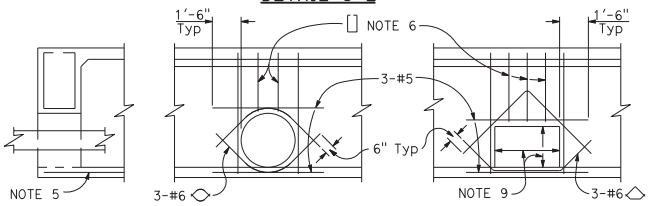

DETAIL U-3

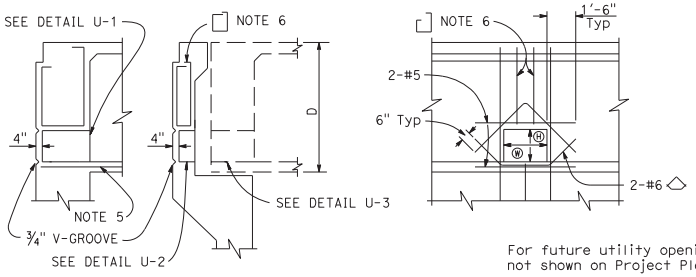

DETAIL U-4
(FOR FUTURE UTILITY OPENING)

INTERMEDIATE DIAPHRAGMS AND HINGES

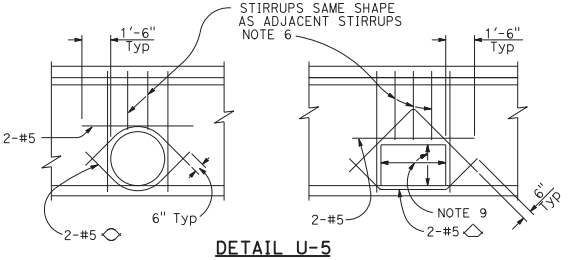

DETAIL U-5
AT INTERMEDIATE DIAPHRAGM

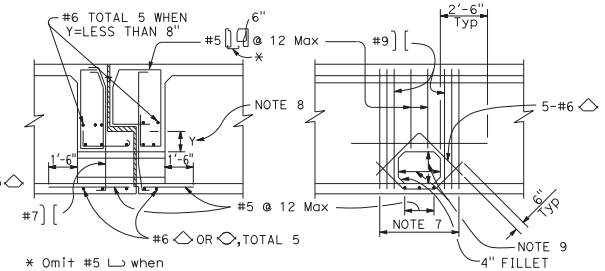

* Omit #5 ⌙ when Y=less than 8"

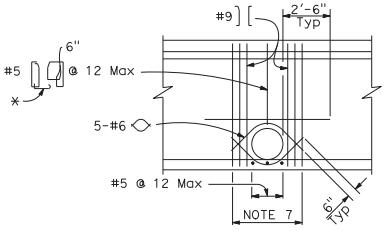

DETAIL U-6
AT HINGE

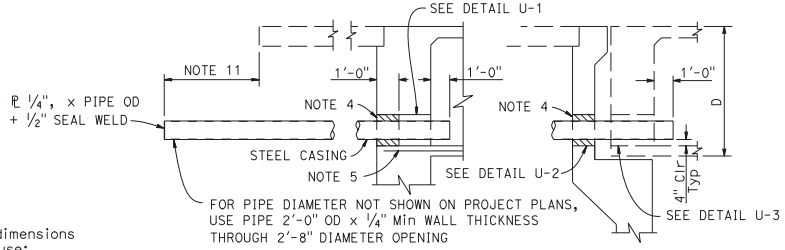

DETAIL U-8
(FOR FUTURE UTILITY PROVISIONS UNDER APPROACH SLAB)

For future utility opening dimensions not shown on Project Plans use:
Ⓗ = ⅓ D or 1'-6" minimum, whichever is greater.
Ⓦ = ⅓ D or 2'-0" minimum, whichever is greater.

BENT CAPS

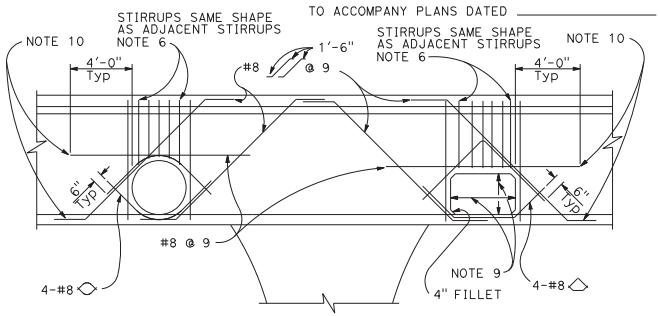

DETAIL U-7
NEAR OR BETWEEN COLUMNS

NOTES:

1. The exact location, elevation, size, and direction of openings shall be in accordance with the Project Plans and as directed by the Engineer.
2. Girders not shown. See Project Plans.
3. All reinforcement detailed to be placed in addition to reinforcement shown on Project Plans.
4. Seal utilities at abutments with concrete or mortar, after tightly wrapping utility with 2 layers of 15 LBS building paper. If structure is prestressed, seal to be placed after stressing is completed.
5. Main reinforcement to clear opening.
6. Reinforcement to be same bar size and ⅔ the spacing of adjacent reinforcement shown on Project Plans.
7. Replace each set of 2-#9 bars cut off by opening. Place ½ on each side of opening.
8. When "Y" is less than 8", extend top of opening to bottom of bearing seat elevation.
9. For future utility opening dimensions, see Project Plans and Detail U-4.
10. When there is insufficient space to place reinforcement as shown, hook reinforcement into exterior girder.
11. Unless otherwise shown on Project Plans, casing shall extend to the greater of 5'-0" beyond the end of the approach slab, 5'-0" beyond the end of the adjacent wingwall, 20'-0" beyond the back of the abutment, or to the State right-of-way limit.

STATE OF CALIFORNIA
DEPARTMENT OF TRANSPORTATION

UTILITY OPENING BOX GIRDER

NO SCALE

RSP B7-10 DATED APRIL 19, 2019 SUPERSEDES STANDARD PLAN B7-10 DATED MAY 31, 2018 - PAGE 349 OF THE STANDARD PLANS BOOK DATED 2018.

REVISED STANDARD PLAN RSP B7-10

2018 REVISED STANDARD PLAN RSP B7-10

8-21-18

© 2020 California Department of Transportation
All Rights Reserved

Dist	COUNTY	ROUTE	POST MILES TOTAL PROJECT	SHEET No.	TOTAL SHEETS

REGISTERED CIVIL ENGINEER

October 16, 2020
PLANS APPROVAL DATE

THE STATE OF CALIFORNIA OR ITS OFFICERS OR AGENTS SHALL NOT BE RESPONSIBLE FOR THE ACCURACY OR COMPLETENESS OF SCANNED COPIES OF THIS PLAN SHEET.

REGISTERED PROFESSIONAL ENGINEER
Tillat Satter
No. C42892
Exp. 3-31-22
CIVIL
STATE OF CALIFORNIA

TO ACCOMPANY PLANS DATED _____

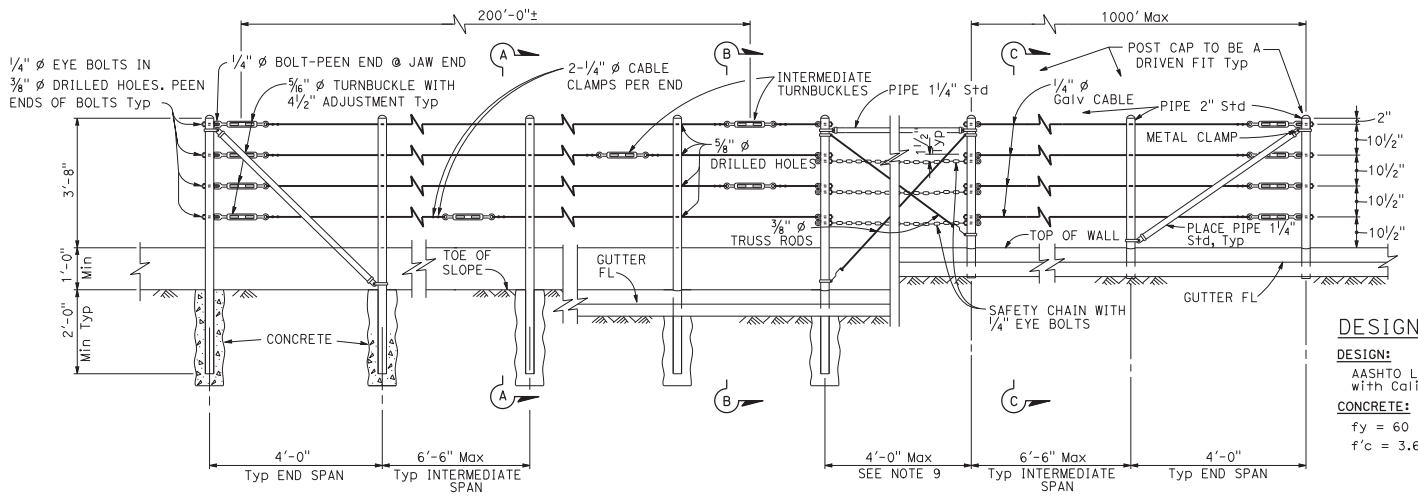

EXISTING WALL (WITHOUT GUTTER)
Existing

RETAINING WALL (WITH GUTTER)
Existing

RETAINING WALL (WITH GUTTER)
New construction

ELEVATION

DESIGN NOTES

DESIGN:

AASHTO LRFD Bridge Design Specifications 8th Edition 2017 with California Amendments April 2019

CONCRETE:

fy = 60 ksi
f'c = 3.6 ksi

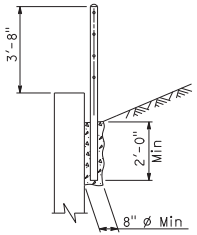

SECTION A-A
Existing

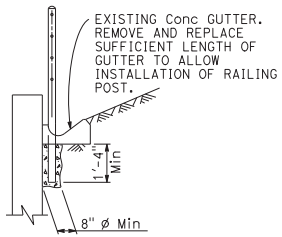

SECTION B-B
Existing

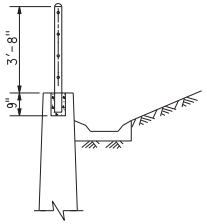

SECTION C-C
New construction

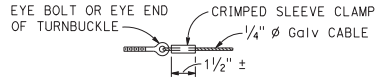

ALTERNATIVE CABLE CONNECTION

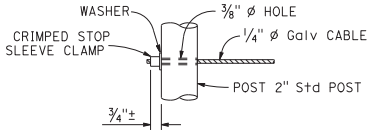

ALTERNATIVE DEAD END ANCHORAGE

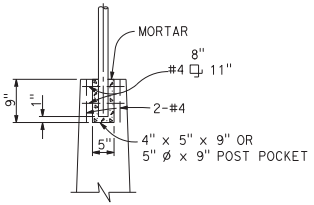

POST POCKET

NOTES:

1. Maximum distance between turnbuckles shall be 200'-0"±.
2. Intermediate turnbuckles to be placed in adjacent spans.
3. Cable shall not be spliced between intermediate turnbuckles and end posts.
4. Posts to be vertical.
5. Alignment of holes in posts may vary to conform to slope of top of retaining wall.
6. The Contractor shall verify all dependent dimensions in the field before ordering or fabricating any material.
7. Line posts shall be braced horizontally and trussed diagonally in both directions at intervals not to exceed 1000'.
8. Post pockets to be centered in top of wall.
9. Typical end spans, braced in both directions, shall be constructed at changes in line where the angle of deflection is 15° or more.
10. Shall not be used for pedestrian walkways.

STATE OF CALIFORNIA
DEPARTMENT OF TRANSPORTATION

CABLE RAILING

NO SCALE

RSP B11-47 DATED OCTOBER 16, 2020 SUPERSEDES STANDARD PLAN B11-47 DATED MAY 31, 2018 - PAGE 359 OF THE STANDARD PLANS BOOK DATED 2018.

REVISED STANDARD PLAN RSP B11-47

2018 REVISED STANDARD PLAN RSP B11-47

3-27-20

© 2020 California Department of Transportation
All Rights Reserved

Dist	COUNTY	ROUTE	POST MILES TOTAL PROJECT	SHEET No.	TOTAL SHEETS

REGISTERED CIVIL ENGINEER

October 16, 2020
PLANS APPROVAL DATE

THE STATE OF CALIFORNIA OR ITS OFFICERS OR AGENTS SHALL NOT BE RESPONSIBLE FOR THE ACCURACY OR COMPLETENESS OF SCANNED COPIES OF THIS PLAN SHEET.

REGISTERED PROFESSIONAL ENGINEER — Tiliat Satter — No. C42892 — Exp. 3-31-22 CIVIL — STATE OF CALIFORNIA

TO ACCOMPANY PLANS DATED _____

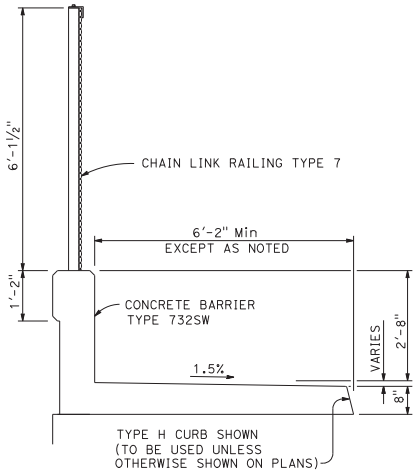

TYPICAL SECTION

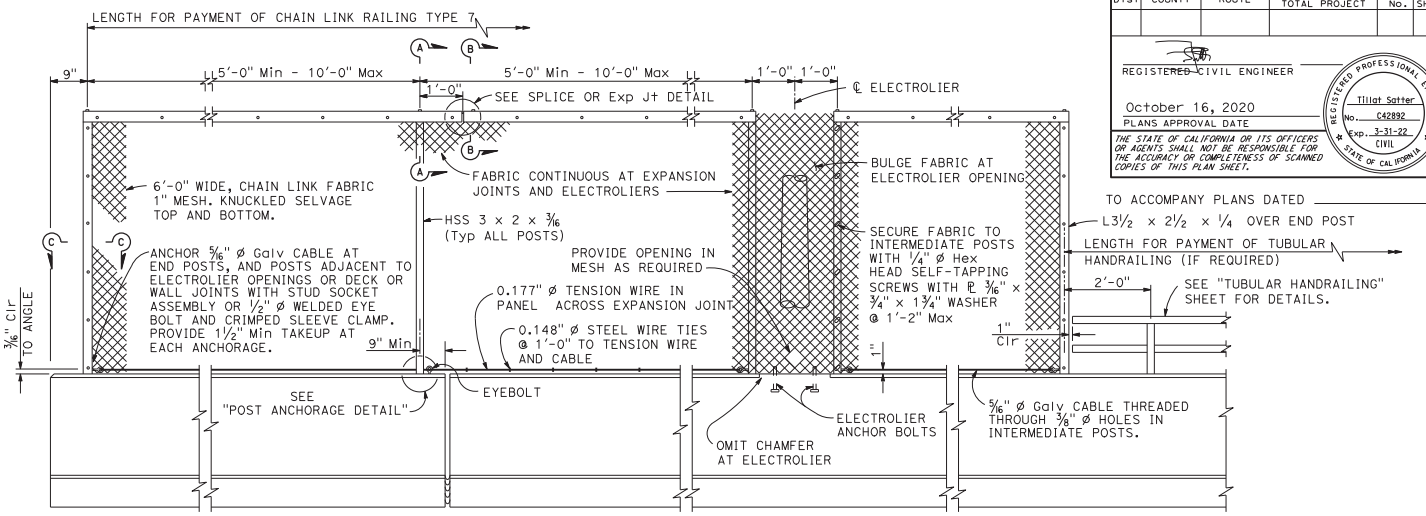

END POST — DECK OR WALL JOINT — ELECTROLIER — TUBULAR HANDRAILING

ELEVATION

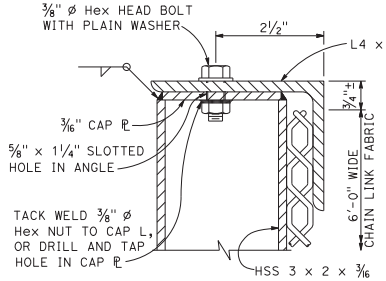

SECTION A-A

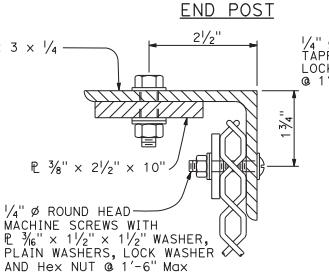

SECTION B-B

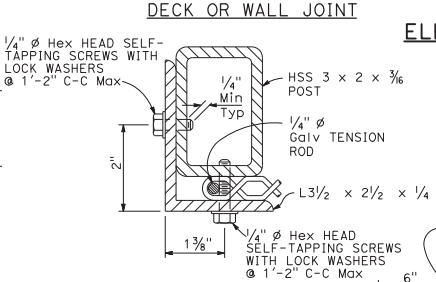

SECTION C-C

DESIGN NOTES

DESIGN:

AASHTO LRFD Bridge Design Specifications 8th Edition 2017
with California Amendments April 2019

CONCRETE:

fy = 60 ksi
f'c = 3.6 ksi

NOTES:

1. Posts shall be vertical.
2. Railing shall conform to horizontal and vertical alignment. When railing is placed on a curved horizontal alignment with radius of 148'-0" or less, thread the 5/16" ø cable through ⅜" ø welded eye rods embedded 4" into the top of the concrete parapet and equally spaced to limit the midordinate distance between the 5/16" ø cable and the curve to 1" maximum. Horizontal angle shall be bent to conform to horizontal alignment if radius is 148'-0" or less and may be on 10'-0" chords if radius is over 148'-0"
3. Horizontal angle shall be continuous over not less than two intermediate posts, except that a shorter length is permitted at expansion joints, electroliers and other rail discontinuities.
4. When rail is on slope, place fabric parallel to slope.
5. For details and reinforcement not shown see Standard Plan B11-58.
6. Expansion joint same dimension as expansion joint in deck or wall. Increase slotted hole length and splice bar length correspondingly.
7. Design valid for bridges with the top of Chanin Link Railing Type 7 equal to or less than 150' height above surrounding ground surfaces.

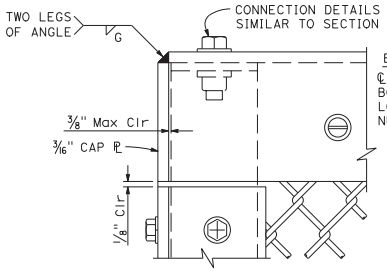

END POST ELEVATION

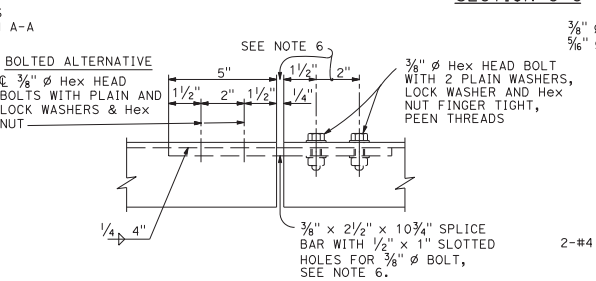

SPLICE OR EXPANSION JOINT DETAIL

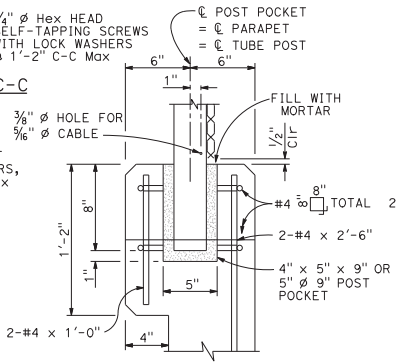

POST ANCHORAGE DETAIL

STATE OF CALIFORNIA
DEPARTMENT OF TRANSPORTATION

CHAIN LINK RAILING TYPE 7

NO SCALE

RSP B11-52 DATED OCTOBER 16, 2020 SUPERSEDES STANDARD PLAN B11-52
DATED MAY 31, 2018 - PAGE 361 OF THE STANDARD PLANS BOOK DATED 2018.

REVISED STANDARD PLAN RSP B11-52

2018 REVISED STANDARD PLAN RSP B11-52

3-27-20

© 2019 California Department of Transportation
All Rights Reserved

Dist	COUNTY	ROUTE	POST MILES TOTAL PROJECT	SHEET No.	TOTAL SHEETS

REGISTERED CIVIL ENGINEER

October 18, 2019
PLANS APPROVAL DATE

REGISTERED PROFESSIONAL ENGINEER
Tiliat Satter
No. C42892
Exp. 3-31-20
CIVIL
STATE OF CALIFORNIA

THE STATE OF CALIFORNIA OR ITS OFFICERS OR AGENTS SHALL NOT BE RESPONSIBLE FOR THE ACCURACY OR COMPLETENESS OF SCANNED COPIES OF THIS PLAN SHEET.

TO ACCOMPANY PLANS DATED _____

2018 REVISED STANDARD PLAN RSP B11-81

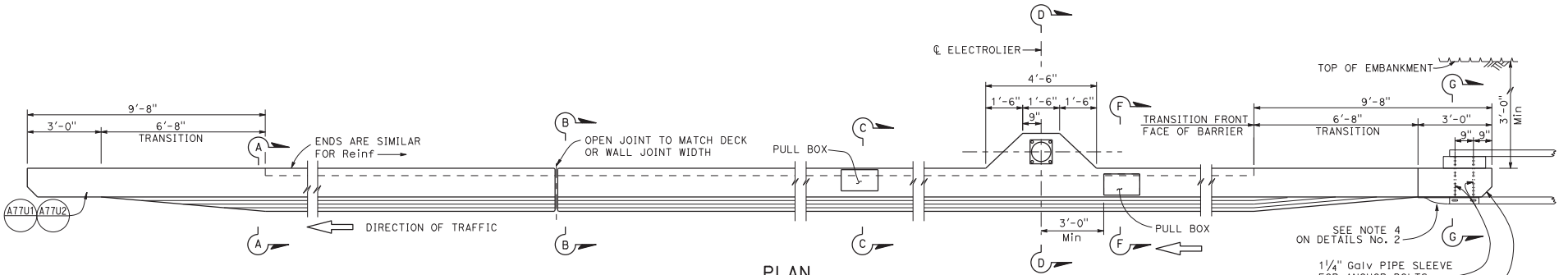

PLAN

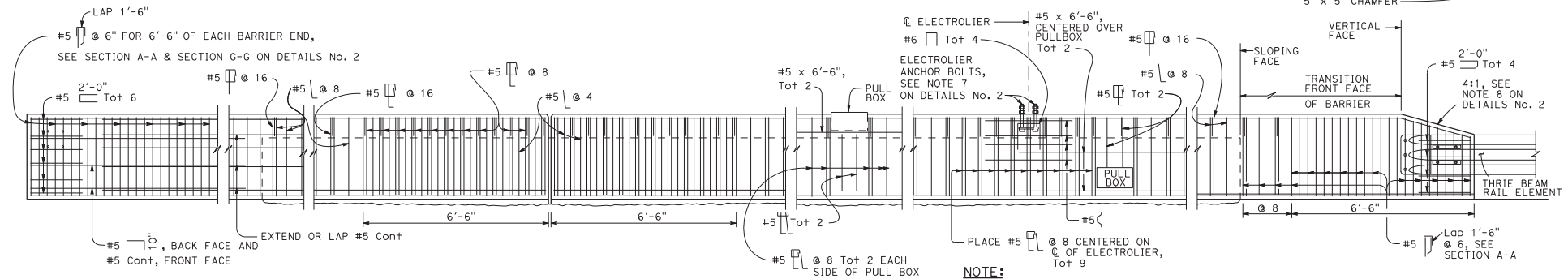

METAL RAILING CONNECTION

DECK OR WALL JOINT

ELEVATION

NOTE:
Reinforcing for wall joint shown

ELECTROLIER
(SEE NOTE 5 ON DETAILS No. 2)

STATE OF CALIFORNIA
DEPARTMENT OF TRANSPORTATION

CONCRETE BARRIER TYPE 842 DETAILS No. 1

NO SCALE

RSP B11-81 DATED OCTOBER 18, 2019 SUPERSEDES RSP B11-81 DATED OCTOBER 19, 2018 THAT SUPPLEMENTS THE STANDARD PLANS BOOK DATED 2018.

REVISED STANDARD PLAN RSP B11-81

1-22-19

© 2019 California Department of Transportation
All Rights Reserved

Dist	COUNTY	ROUTE	POST MILES TOTAL PROJECT	SHEET No.	TOTAL SHEETS

REGISTERED CIVIL ENGINEER

October 18, 2019
PLANS APPROVAL DATE

Tillat Satter
No. C42892
Exp. 3-31-20
CIVIL
REGISTERED PROFESSIONAL ENGINEER
STATE OF CALIFORNIA

THE STATE OF CALIFORNIA OR ITS OFFICERS OR AGENTS SHALL NOT BE RESPONSIBLE FOR THE ACCURACY OR COMPLETENESS OF SCANNED COPIES OF THIS PLAN SHEET.

TO ACCOMPANY PLANS DATED _____

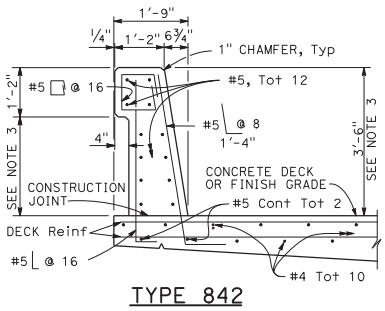

TYPE 842

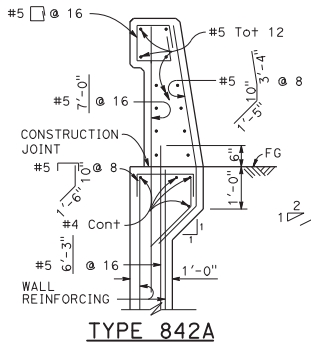

TYPE 842A

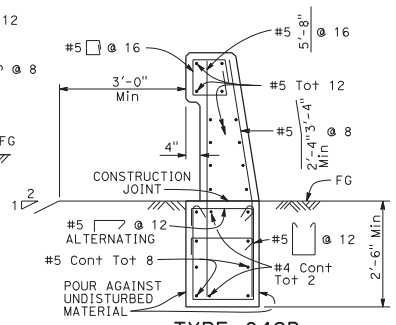

TYPE 842B

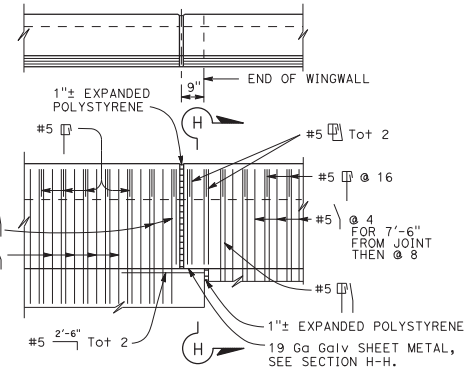

TYPE 842A TYPE 842B

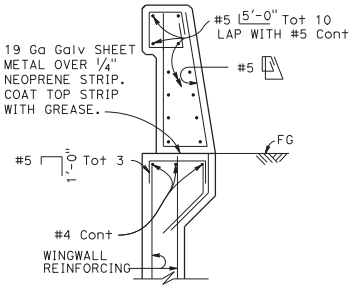

SECTION H-H

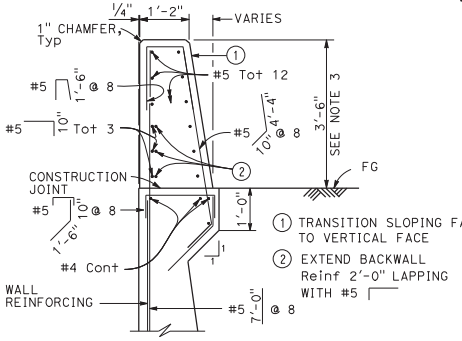

SECTION A-A

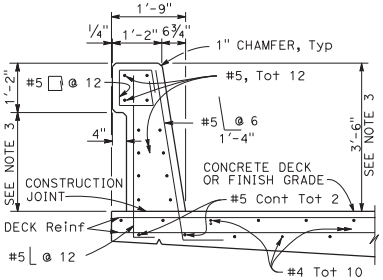

SECTION B-B

NOTE:
Types 842A & 842B are similar to Type 842 except as noted

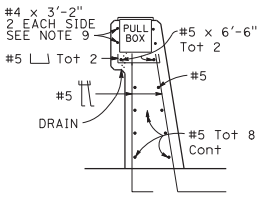

SECTION C-C
SEE NOTES

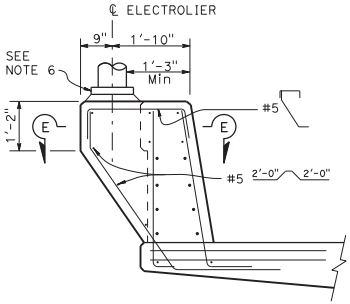

PEDESTAL ELEVATION
SECTION D-D

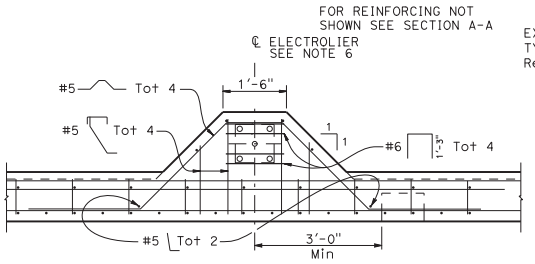

SECTION E-E

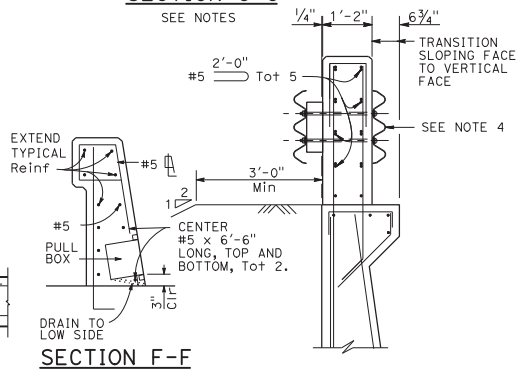

SECTION F-F
SEE NOTES

SECTION G-G

NOTES:

1. Walls are to be backfilled before barrier is placed.
2. Clearance to reinforcing steel in barrier to be 2", except as noted. Longitudinal reinforcement to stop at all expansion joints.
3. Dimensions may vary with roadway cross slope and with certain thickness of surfacing. See "ROADWAY PLANS."
4. For typical metal railing connection details not shown, see Standard Plans A77U1 and A77U2.
5. See Standard Plans ES-9A, ES-9B, ES-9C, ES-9D, and ES-9E for electrical details. The maximum number of conduits in the barrier is limited to two 2" conduits along with one 3" conduit. When a 3" conduit is used, it is restricted to the base of the barrier.
6. For electroiler mounting details, See Standard Plans ES-6A and ES-6B.
7. Minimum concrete edge distance, to the renforcing shown, shall be maintained. Edge distance may be adjusted to accomodate increase in concrete cover for architectural treatment.
8. Taper the top of the end of the bridge railing at 4:1 to match the top elevation of the thrie beam rail element.
9. In front and back of pull box (SECTION C-C) the #4 x 3'-2" bars must be centered so that they extend minimum 8" beyond ends of pull box. As an alternative, may substitute 4 x 4 - W12 x W12 welded fabric extending minimum 8" beyond ends of pull box.

STATE OF CALIFORNIA
DEPARTMENT OF TRANSPORTATION

CONCRETE BARRIER TYPE 842 DETAILS No. 2

NO SCALE

RSP B11-82 DATED OCTOBER 18, 2019 SUPERSEDES RSP B11-82
DATED OCTOBER 19, 2018 THAT SUPPLEMENTS THE STANDARD PLANS BOOK DATED 2018.

REVISED STANDARD PLAN RSP B11-82

1-22-19

2018 REVISED STANDARD PLAN RSP B11-82

© 2018 California Department of Transportation
All Rights Reserved

DESIGN NOTES:

Design Specifications:
AASHTO LRFD Bridge Design Specifications, 6th Edition with California Amendments.

Loading:
Live load: (AASHTO LRFD 3.6.1.2)
HL-93 consists of design truck or design tandem and design lane load.

Impact Factor: (Apply to roof slab only)
$IM = 33(1.0-0.125D_E) \geq 0\%$ (AASHTO LRFD 3.6.2.2)
D_E = minimum depth of earth cover

Earth load:
Earth pressure for two conditions:
140 pcf vertical, 36 pcf horizontal
140 pcf vertical, 120 pcf horizontal

Load Factors:
AASHTO LRFD Table 3.4.1.1 & Table 3.4.1.2

Unit stresses:
f'_c = 3600 psi
f_y = 60,000 psi

Distribution "d" bars:
Up to and including 10'-0" cover
Express as a percentage of main positive reinforcement required: $\frac{100}{\sqrt{S}}$, Max 50%,
Over 10'-0" cover,
4 @ 12 maximum

Shear:
$V_c = \{2.14\sqrt{f'_c}+4600\ \frac{A_s}{bd_e}\frac{Vud_e}{Mu}\}\ b.d_e \leq 4.0\sqrt{f'_c}b.d_e$ (Pounds)
V_c shall not be less than $3.00\sqrt{f'_c}b.d_e$ for frame members and $2.5\sqrt{f'_c}b.d_e$ for simply supported members.

Exclusion:
Compressive reinforcement and negative moment reduction (for continuity) do not apply.
Axial loading on members has not been considered.

GENERAL NOTES:

Designation:
Standard single or multiple box culverts are shown on plans as span times height with maximum cover over roof thus: 8' x 5' RCB with 10' or double 10' x 5' RCB with 20', followed by alternatives.

Alternatives:
Single cell: Invert will be sloped unless "trapezoidal invert", "flat invert" or "V invert" is included in designation.
Multiple cell: Invert will be vee unless "flat invert" is specified. Ends of culvert will be rounded unless "square ends" are designated. Parapets will be as shown unless designated in plans. Such designations may be different for inlet and outlet ends.

Quantities:
Quantities do not include the following:
- Concrete for parapet, paving notches and cut-off wall.
- Reinforcement for 2% splices, parapets, paving notches, cut-off wall and additional required bars for exposed top slab (D-80, Note 9).

Reinforcement placement:
Main reinforcement is to be placed transversely or, for curved culverts, radially. When radial, reinforcing spacing of the "a", "f" and "g" bars is measured along the centerline. Stagger splices not shown. Hooks may be rotated or tilted, as necessary, for clearance.

Special reinforcement coverage:
Box standard plans are not to be used for culverts in a corrosive environment or where there is a severe abrasive flow condition or in freeze-thaw locations.

Special design:
Required for culverts with conditions, loads, design bearing pressures or sizes greater than those given on this plan or Standard Plans D80 & D81. Also required for multiple cell culverts with unequal spans. For culverts with railroad loading, see the current AREMA design specification.

3 or more cells:
For culverts with more than two cells, use dimensions and reinforcement for the standard "double box culvert" and adjust quantities accordingly.

CONSTRUCTION NOTES:

Construction loads:
Strutting required as shown on Standard Plan D88. Strutting may be required on culvert extensions when existing parapet is removed.

Expansion joints:
Invert:
No expansion joints shall be permitted.

Roof and Walls:
When cover is less than span length-
Place ½" premolded expansion joint filler at 30'-0" ± centers outside the paved roadway lanes and place Bridge Detail 3-2, Standard Plan B0-3, at 30'-0" centers under paved roadway lanes.
When cover is more than span length-
Place ½" premolded expansion joint filler at 30'-0" ± centers and additional ½" premolded expansion joints at locations of change in foundation character, as directed by the Engineer.

Construction joints:
Temporary joints may be permitted if normal (or radial) to ℄ of RCB. Otherwise, the contractor is to submit a proposal for consideration.

Cutoff walls:
4'-0" cutoff walls are to be provided at inlet and/or outlet unless adjacent channel is lined and unless otherwise shown. These walls are to be extended if scour conditions warrant.

Earthwork:
See Standard Plan A62E.

Backfill:
See Standard Specifications, except that the difference in level of backfill (against outside walls) shall not exceed 2'-0".

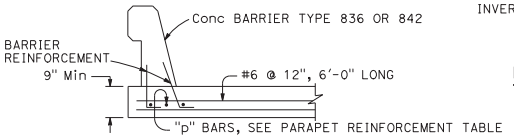

BARRIER SECTION (30'-0" MINIMUM)

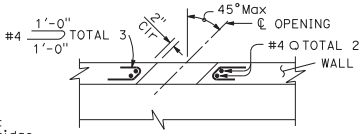

PART PLAN-SECTION

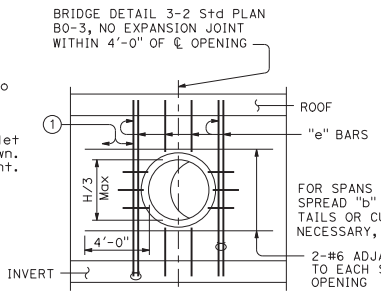

LONGITUDINAL SECTION

UTILITY OPENING-WALL

H=Height of box

① Adjacent to each side of the opening, place additional bars equivalent to half the interrupted main reinforcement.

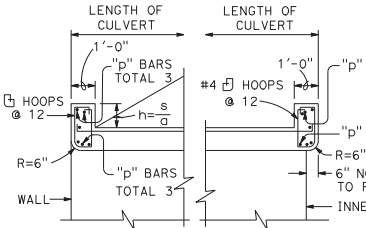

SINGLE SPAN MULTIPLE SPAN

PARAPET DETAIL

s = Clear span (ft)
a = 12 cosine skew angle
h = Height, 1'-0" Min

PARAPET "p" BARS			
SKEW ANGLE / SPAN	0° TO 15°	16° TO 30°	31° TO 45°
4'	#4	#4	#4
6'	#4	#4	#5
8'	#4	#5	#6
10'	#5	#6	#7
12'	#6	#7	#8
14'	#7	#8	#9

PARAPET REINFORCEMENT

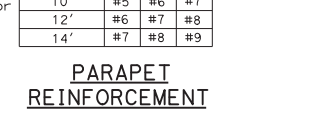

PART PLAN

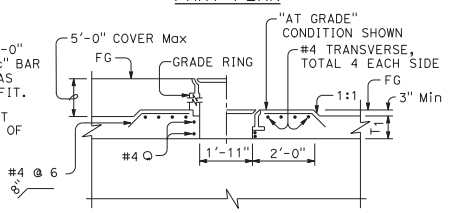

PART LONGITUDINAL SECTION

MANHOLE

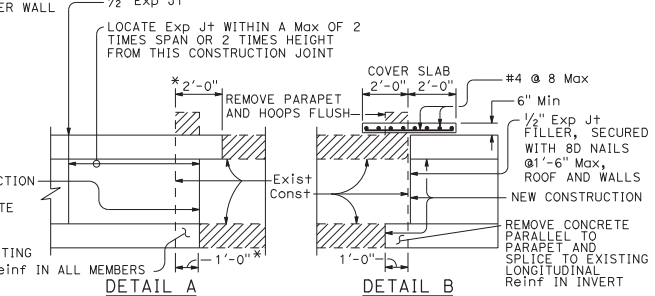

DETAIL A

20° maximum skew as shown. If existing longitudinal and transverse reinforcing bars in top slab are lap spliced with new longitudinal and transverse reinforcing bars, the 20° skew may be exceeded. Lap splicing may require removal of top slab in excess of 2'-0" shown.

DETAIL B

Single cell only, no skew allowed, 1'-0" minimum cover.

* Measured perpendicular to parapet

CULVERT EXTENSION

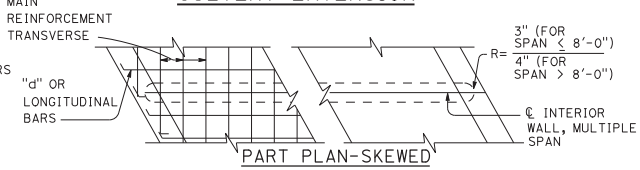

PART PLAN-SKEWED

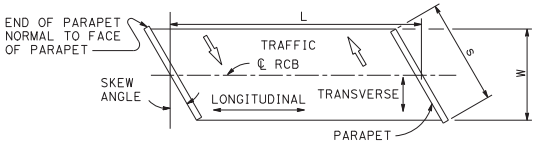

RCB TERMINOLOGY

STATE OF CALIFORNIA
DEPARTMENT OF TRANSPORTATION

CAST-IN-PLACE REINFORCED CONCRETE BOX CULVERT MISCELLANEOUS DETAILS

NO SCALE

Dist	COUNTY	ROUTE	POST MILES TOTAL PROJECT	SHEET No.	TOTAL SHEETS

REGISTERED CIVIL ENGINEER

October 19, 2018
PLANS APPROVAL DATE

Carl M. Duan
No. C59976
Exp. 6-30-20
CIVIL
STATE OF CALIFORNIA

THE STATE OF CALIFORNIA OR ITS OFFICERS OR AGENTS SHALL NOT BE RESPONSIBLE FOR THE ACCURACY OR COMPLETENESS OF SCANNED COPIES OF THIS PLAN SHEET.

TO ACCOMPANY PLANS DATED _____

RSP D82 DATED OCTOBER 19, 2018 SUPERSEDES STANDARD PLAN D82 DATED MAY 31, 2018 - PAGE 223 OF THE STANDARD PLANS BOOK DATED 2018.

REVISED STANDARD PLAN RSP D82

2018 REVISED STANDARD PLAN RSP D82

2-22-18

© 2018 California Department of Transportation
All Rights Reserved

Dist	COUNTY	ROUTE	POST MILES TOTAL PROJECT	SHEET No.	TOTAL SHEETS

REGISTERED CIVIL ENGINEER

October 19, 2018
PLANS APPROVAL DATE

Carl M. Duan
No. C59976
Exp. 6-30-20
CIVIL
REGISTERED PROFESSIONAL ENGINEER
STATE OF CALIFORNIA

THE STATE OF CALIFORNIA OR ITS OFFICERS OR AGENTS SHALL NOT BE RESPONSIBLE FOR THE ACCURACY OR COMPLETENESS OF SCANNED COPIES OF THIS PLAN SHEET.

TO ACCOMPANY PLANS DATED _____

2018 REVISED STANDARD PLAN RSP D84

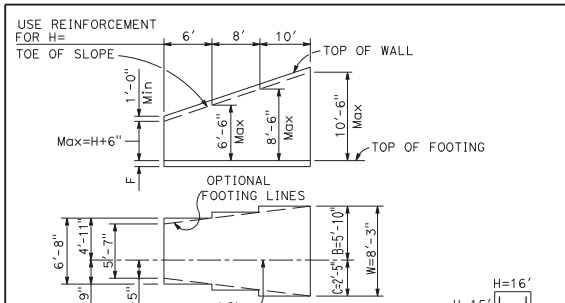

TYPICAL LAYOUT EXAMPLE

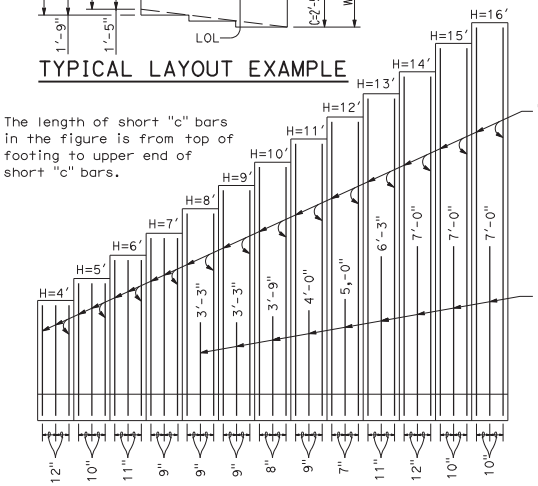

REINFORCED CONCRETE WINGWALLS

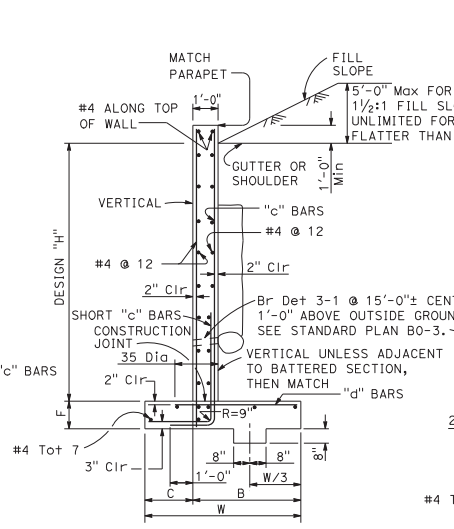

TYPICAL SECTION
H=4' THRU 12'

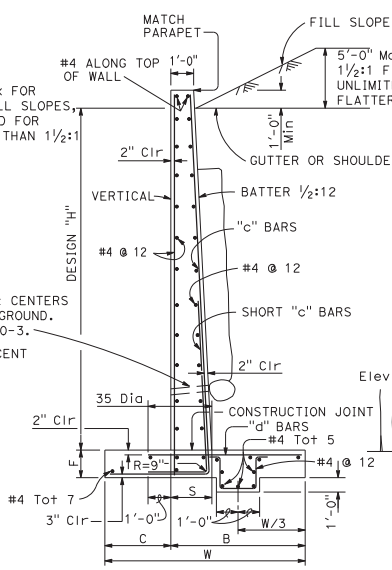

TYPICAL SECTION
H=13' THRU 16'

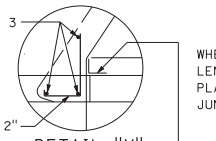

DETAIL "X"

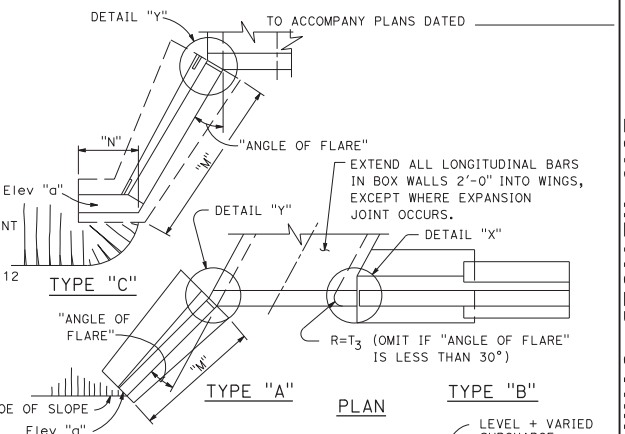

TYPE "C"

TYPE "A"

PLAN

TYPE "B"

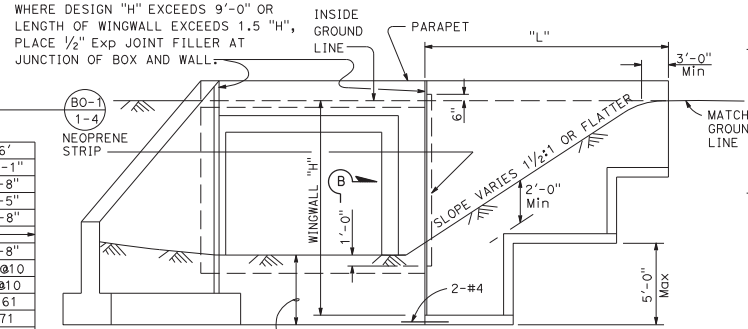

TYPE "A"

END ELEVATION

FOR FOOTING STEP DIMENSIONS AND REINFORCEMENT, SEE "FOOTING STEP" ON Std PLAN B3-5.

TYPE "B"

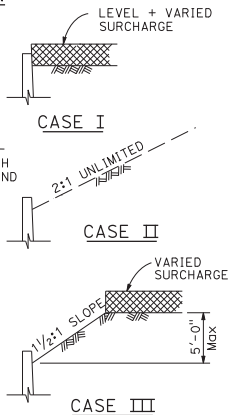

DETAIL OF DESIGN LOADING CASES

"H"	4'	5'	6'	7'	8'	9'	10'	11'	12'	13'	14'	15'	16'
W	5'-7"	6'-2"	6'-8"	7'-1"	7'-6"	7'-10"	8'-3"	8'-8"	9'-2"	9'-7"	10'-2"	10'-6"	11'-1"
C	1'-5"	1'-7"	1'-9"	1'-11"	2'-1"	2'-3"	2'-5"	2'-8"	2'-10"	3'-1"	3'-4"	3'-6"	3'-8"
B	4'-2"	4'-7"	4'-11"	5'-2"	5'-5"	5'-7"	5'-10"	6'-0"	6'-4"	6'-6"	6'-10"	7'-0"	7'-5"
F	1'-2"	1'-2"	1'-2"	1'-2"	1'-2"	1'-2"	1'-2"	1'-3"	1'-5"	1'-5"	1'-6"	1'-6"	1'-8"
BATTER	None								½:12				
S	1'-0"	1'-0"	1'-0"	1'-0"	1'-0"	1'-0"	1'-0"	1'-0"	1'-0"	1'-6½"	1'-7"	1'-7½"	1'-8"
"c" BARS	#4@12	#4@10	#5@11	#5@9	#6@9	#7@9	#7@8	#8@9	#7@7	#8@11	#9@12	#10@10	#10@10
"d" BARS	#5@12	#5@10	#6@11	#6@9	#6@9	#6@9	#6@8	#7@9	#6@7	#7@11	#8@12	#8@10	#9@10
* Conc CY/LF	0.46	0.52	0.58	0.64	0.69	0.74	0.80	0.88	1.00	1.25	1.37	1.45	1.61
* Reinf LB/LF	26	32	41	50	59	70	81	95	102	112	120	156	171
** CASE I qu (ksf), B'(ft)	3.75,2.24	3.66,2.69	3.59,3.11	3.56,3.49	3.52,3.89	3.52,4.21	3.69,4.46	3.77,4.77	3.89,5.17	3.92,5.61	3.92,6.18	4.04,6.40	4.13,6.95
** CASE II qu (ksf), B'(ft)	1.16,5.58	1.33,6.13	1.51,6.55	1.69,6.86	1.88,7.16	2.08,7.33	2.29,7.60	2.50,7.86	2.77,8.14	2.97,8.47	3.18,8.93	3.41,9.05	3.70,9.43
** CASE III qu (ksf), B'(ft)	1.26,5.46	1.36,5.97	1.49,6.37	1.64,6.66	1.79,6.93	1.95,7.08	2.11,7.33	2.28,7.55	2.50,7.84	2.66,8.12	2.81,8.59	3.00,8.69	3.22,9.10

B'=B-(2) eccentricity, B' is the effective footing width.
* Quantities include 1'-0" extension above the design "H" limit.
** Soil bearing pressure shown in the table is the equivalent uniform pressure per AASHTO LRFD - 11.6.3.2

NOTES:

Unit Stresses: f'c=3,600 psi, fy=60,000 psi
Earth density: 120 pcf
Equivalent fluid pressure: 36 pcf
Elevations, length and angle of flare of wings may be varied by the Engineer to suit conditions encountered in the field.
Dimensions "H","L","M","N", Elevation "a" and "Angle of flare" (as applicable) are shown on the plans.
Wall height may be exceeded by 6" before going to next greater "H".
Eliminate cutoff wall if adjacent channel is paved and skew is 20° maximum.
For wall offset values, see Standard Plan B3-5.

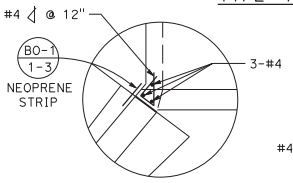

DETAIL "Y"

STRAIGHT WINGWALLS

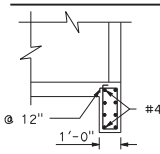

SECTION B-B

STATE OF CALIFORNIA
DEPARTMENT OF TRANSPORTATION

BOX CULVERT WINGWALLS TYPES A, B AND C

NO SCALE

RSP D84 DATED OCTOBER 19, 2018 SUPERSEDES STANDARD PLAN D84
DATED MAY 31, 2018 - PAGE 226 OF THE STANDARD PLANS BOOK DATED 2018.

REVISED STANDARD PLAN RSP D84

6-15-18

© 2019 California Department of Transportation
All Rights Reserved

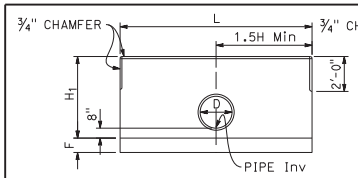

ELEVATION
STRAIGHT HEADWALL
SINGLE CIRCULAR PIPE

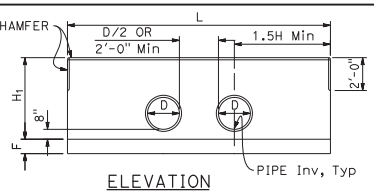

ELEVATION
STRAIGHT HEADWALL
DOUBLE CIRCULAR PIPE

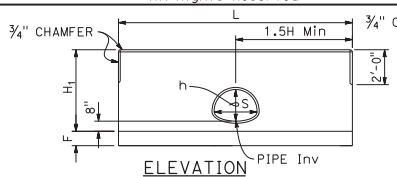

ELEVATION
STRAIGHT HEADWALL
SINGLE CMP

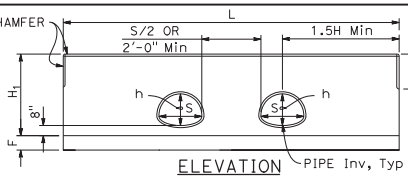

ELEVATION
STRAIGHT HEADWALL
DOUBLE CMP

Dist	COUNTY	ROUTE	POST MILES TOTAL PROJECT	SHEET No.	TOTAL SHEETS

REGISTERED CIVIL ENGINEER

October 18, 2019
PLANS APPROVAL DATE

THE STATE OF CALIFORNIA OR ITS OFFICERS OR AGENTS SHALL NOT BE RESPONSIBLE FOR THE ACCURACY OR COMPLETENESS OF SCANNED COPIES OF THIS PLAN SHEET.

REGISTERED PROFESSIONAL ENGINEER
Carl M. Duan
No. C59976
Exp. 6-30-20
CIVIL
STATE OF CALIFORNIA

TO ACCOMPANY PLANS DATED _____

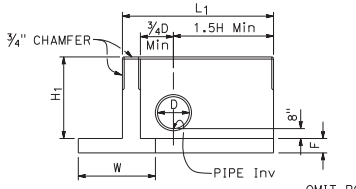

ELEVATION
"L" HEADWALL

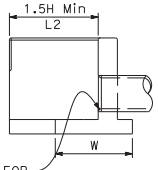

OMIT ROUNDING FOR PIPES < 48" Dia

SECTION
"L" HEADWALL

H (Min)	CIRCULAR PIPE SIZE D	CMP ARCH SIZE S x h
3'-11"	12"	-
4'-2"	15"	21" x 15"
4'-5"	18"	24" x 18"
4'-8"	21"	28" x 20"
4'-11"	24"	35" x 24"
5'-2"	27"	-
5'-5"	30"	42" x 29"
5'-8"	33"	49" x 33"
5'-11"	36"	-
6'-2"	39"	57" x 38"
6'-5"	42"	64" x 43"
6'-8"	45"	-
6'-11"	48"	71" x 47"

CIRCULAR PIPE CULVERT HEADWALLS

SEE NOTE 2

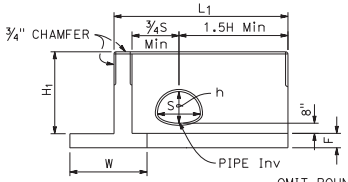

ELEVATION
"L" HEADWALL

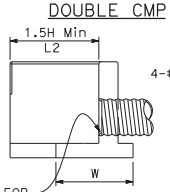

OMIT ROUNDING FOR PIPES < 48" Dia

SECTION
"L" HEADWALL

CMP ARCH CULVERT HEADWALLS

SEE NOTE 2

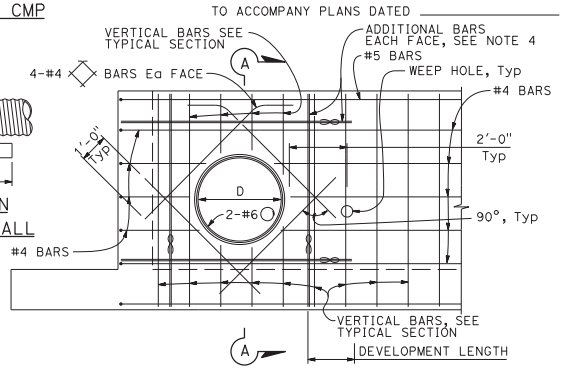

REINFORCEMENT MODIFICATION

"L" headwall shown. Straight headwall similar.
Circular pipe shown. CMP arch similar.

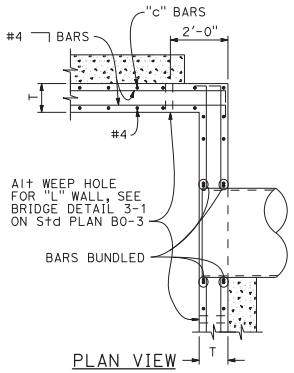

STEM WALL

"L" headwall shown.
Straight headwall similar.

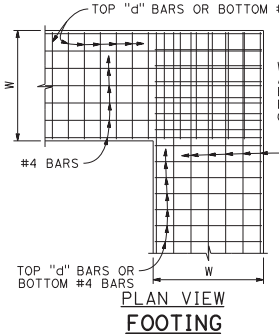

FOOTING

"L" headwall shown.
Straight headwall similar.

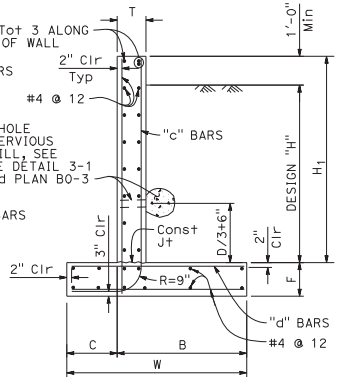

TYPICAL SECTION

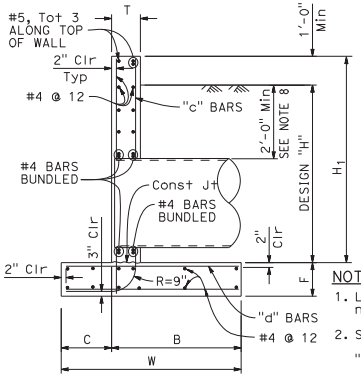

SECTION A-A

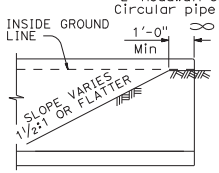

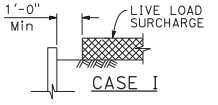

DETAIL OF DESIGN LOADING CASES

H	3'-11"	4'-2"	4'-5"	4'-8"	4'-11"	5'-2"	5'-5"	5'-8"	5'-11"	6'-2"	6'-5"	6'-8"	6'-11"
T	10"	10"	10"	10"	10"	10"	10"	10"	10"	1'-0"	1'-0"	1'-0"	1'-0"
W	4'-10"	4'-10"	5'-0"	5'-4"	5'-4"	5'-4"	5'-4"	5'-4"	5'-4"	5'-4"	5'-6"	5'-9"	6'-0"
C	1'-0"	1'-0"	1'-0"	1'-4"	1'-4"	1'-4"	1'-4"	1'-4"	1'-4"	1'-4"	1'-6"	1'-6"	1'-6"
B	3'-10"	3'-10"	4'-0"	4'-0"	4'-0"	4'-0"	4'-0"	4'-0"	4'-0"	4'-0"	4'-0"	4'-3"	4'-6"
F	1'-0"	1'-0"	1'-0"	1'-0"	1'-0"	1'-0"	1'-0"	1'-0"	1'-0"	1'-2"	1'-2"	1'-2"	1'-2"
"c" BARS	#4 @ 12	#4 @ 12	#4 @ 12	#4 @ 12	#4 @ 12	#4 @ 12	#4 @ 12	#5 @ 12	#5 @ 12	#5 @ 12	#5 @ 9	#5 @ 9	
"d" BARS	#5 @ 12	#5 @ 12	#5 @ 12	#5 @ 8	#5 @ 8	#5 @ 8	#5 @ 8	#6 @ 8	#6 @ 8	#6 @ 8	#6 @ 6	#6 @ 6	#6 @ 6
* Conc CY/LF	0.33	0.34	0.35	0.37	0.38	0.39	0.40	0.40	0.41	0.50	0.51	0.53	0.55
* Reinf LB/LF	32	32	33	37	38	39	43	47	48	53	58	60	
**CASE I Ser (q'o, B')	0.87, 4.68	0.88, 4.69	0.88, 4.75	0.89, 4.80	0.90, 4.95	0.92, 5.09	0.95, 5.00	0.96, 4.90	1.05, 4.80	1.10, 4.67	1.12, 4.70	1.14, 5.05	1.15, 5.32
**CASE I Str (q'o, B')	1.45, 4.60	1.49, 4.65	1.50, 4.71	1.52, 4.78	1.53, 4.81	1.55, 4.99	1.62, 4.50	2.10, 3.15	2.20, 2.50	2.38, 1.63	2.15, 1.65	2.10, 2.20	2.04, 2.41

* Quantities include 1'-0" extension above the design "H" limit.
** q'o = net bearing stress (ksf), B' = effective footing width (ft)
Ser - service limit
Str - strength limit

REINFORCED CONCRETE HEADWALL

Quantities do not include added diagonals and do not consider pipe occupancy.

NOTE: Reinforced Concrete: f_y = 60,000 psi
f'_c = 3,600 psi
Earth Density: 120 pcf
Equivalent Fluid Pressure: 36 pcf

NOTES:

1. Length of wall from ℄ pipe to end of wall is 1.5H Min. The ends of headwall need to be embedded into the slope by one foot.
2. Single circular pipe or single CMP shown for "L" headwall. For double pipe in "L" headwall, see "ELEVATION STRAIGHT HEADWALL DOUBLE CIRCULAR PIPE" or "ELEVATION STRAIGHT HEADWALL DOUBLE CMP" detail for additional information.
3. Cable railing to be installed on top of headwall when shown on Project Plans. See Standard Plan B11-47 for cable railing details.
4. Adjacent to each side of the opening, place additional reinforcement equivalent to half the interrupted main reinforcement.
5. Quantities are approximate and for design purposes only. No deduction is made for pipe or arch occupancy.
6. Provide necessary erosion protection in front of wall.
7. If precast construction is used, the design standard shall be equal to or exceed that shown here, and the bottom of footing must be roughened.
8. Minimum earth cover of two feet at ETW of the roadway without cap protection to pipe.

STATE OF CALIFORNIA
DEPARTMENT OF TRANSPORTATION

PIPE CULVERT HEADWALLS STRAIGHT AND "L"

NO SCALE

RSP D89A DATED OCTOBER 18, 2019 SUPPLEMENTS THE STANDARD PLANS BOOK DATED 2018.

REVISED STANDARD PLAN RSP D89A

2018 REVISED STANDARD PLAN RSP D89A

6-21-19

© 2019 California Department of Transportation
All Rights Reserved

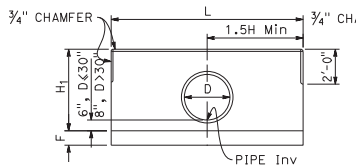

ELEVATION
STRAIGHT HEADWALL
SINGLE CIRCULAR PIPE

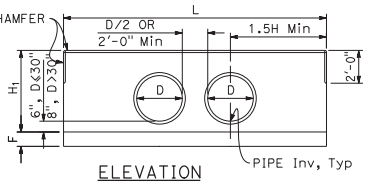

ELEVATION
STRAIGHT HEADWALL
DOUBLE CIRCULAR PIPE

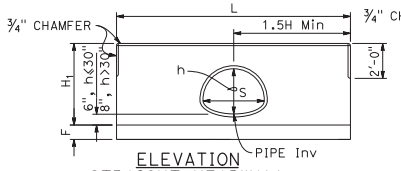

ELEVATION
STRAIGHT HEADWALL
SINGLE CMP

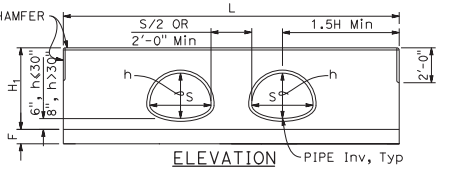

ELEVATION
STRAIGHT HEADWALL
DOUBLE CMP

Dist	COUNTY	ROUTE	POST MILES TOTAL PROJECT	SHEET No.	TOTAL SHEETS

REGISTERED CIVIL ENGINEER

October 18, 2019
PLANS APPROVAL DATE

THE STATE OF CALIFORNIA OR ITS OFFICERS OR AGENTS SHALL NOT BE RESPONSIBLE FOR THE ACCURACY OR COMPLETENESS OF SCANNED COPIES OF THIS PLAN SHEET.

REGISTERED PROFESSIONAL ENGINEER
Carl M. Duan
No. C59976
Exp. 6-30-20
CIVIL
STATE OF CALIFORNIA

TO ACCOMPANY PLANS DATED _____

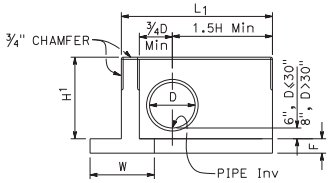

ELEVATION
"L" HEADWALL

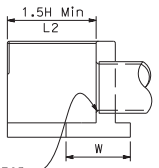

SECTION
"L" HEADWALL

H	CIRCULAR PIPE SIZE D	CMP ARCH SIZE S x h
2'-8"	12"	-
2'-11"	15"	21" x 15"
3'-2"	18"	24" x 18"
3'-5"	21"	28" x 20"
3'-8"	24"	35" x 24"
3'-11"	27"	-
4'-2"	30"	42" x 29"
4'-8"	33"	49" x 33"
4'-11"	36"	-
5'-2"	39"	57" x 38"
5'-5"	42"	64" x 43"
5'-8"	45"	-
5'-11"	48"	71" x 47"
6'-2"	51"	-
6'-5"	54"	-

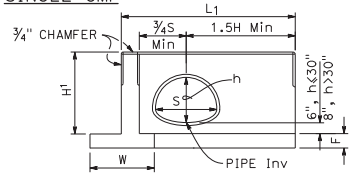

ELEVATION
"L" HEADWALL

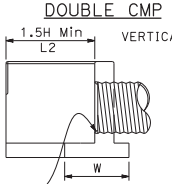

SECTION
"L" HEADWALL

CIRCULAR PIPE CULVERT HEADWALLS

SEE NOTE 2

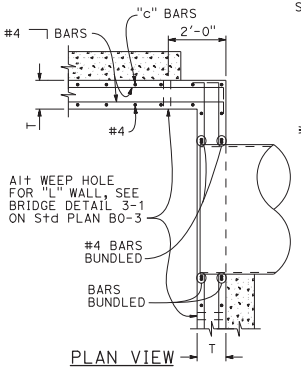

PLAN VIEW
STEM WALL
"L" headwall shown.
Straight headwall similar.

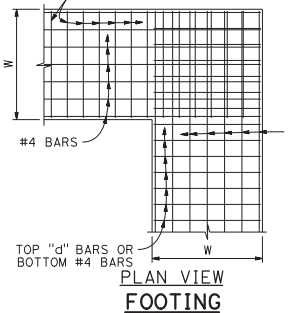

PLAN VIEW
FOOTING
"L" headwall shown.
Straight headwall similar.

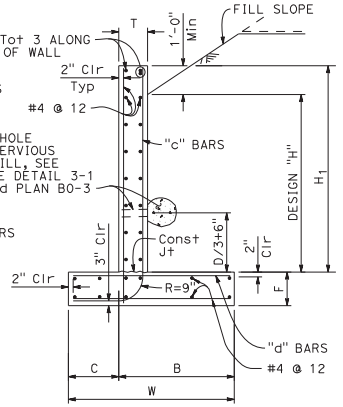

TYPICAL SECTION

CMP ARCH CULVERT HEADWALLS

SEE NOTE 2

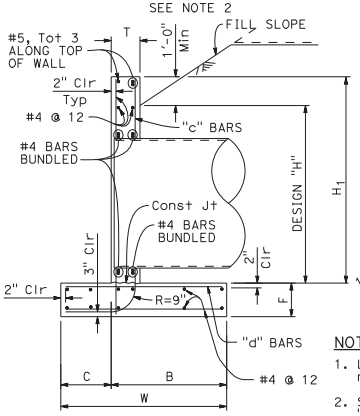

SECTION A-A

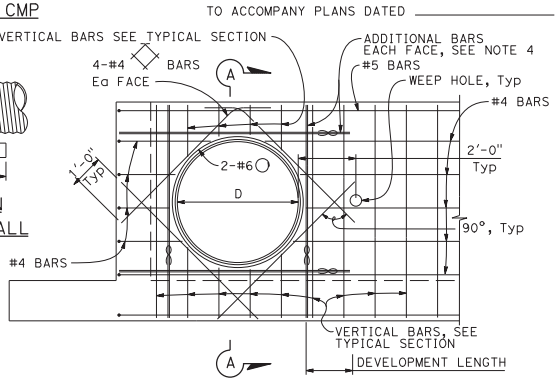

REINFORCEMENT MODIFICATION

"L" headwall shown. Straight headwall similar.
Circular pipe shown. CMP arch similar.
∞ - Bundle of two bars

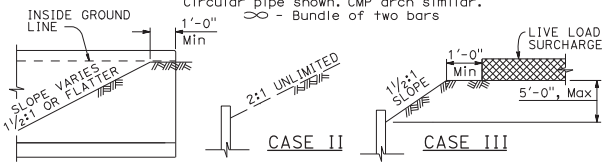

DETAIL OF DESIGN LOADING CASES

		2'-8"	2'-11"	3'-2"	3'-5"	3'-8"	3'-11"	4'-2"	4'-8"	4'-11"	5'-2"	5'-5"	5'-8"	5'-11"	6'-2"	6'-5"
H		10"	10"	10"	10"	10"	10"	10"	10"	10"	10"	10"	10"	1'-0"	1'-0"	1'-0"
T		2'-3"	2'-3"	2'-3"	2'-6"	2'-6"	2'-6"	3'-0"	3'-0"	3'-3"	3'-9"	4'-0"	4'-2"	4'-2"	4'-6"	4'-9"
W		6"	6"	6"	6"	6"	6"	9"	9"	9"	1'-0"	1'-0"	1'-0"	1'-0"	1'-0"	1'-3"
C		1'-9"	1'-9"	1'-9"	2'-0"	2'-0"	2'-0"	2'-3"	2'-3"	2'-3"	2'-9"	3'-0"	3'-2"	3'-2"	3'-6"	3'-6"
B		1'-0"	1'-0"	1'-0"	1'-0"	1'-0"	1'-2"	1'-2"	1'-2"	1'-2"	1'-2"	1'-2"	1'-2"	1'-2"	1'-2"	1'-2"
F		#4 @ 12	#4 @ 12	#4 @ 12	#4 @ 12	#4 @ 12	#4 @ 12	#4 @ 12	#5 @ 12	#5 @ 12	#5 @ 12	#5 @ 12	#5 @ 12	#5 @ 9	#5 @ 9	#5 @ 9
"c" BARS		#4 @ 12	#4 @ 12	#4 @ 12	#4 @ 12	#5 @ 12	#5 @ 12	#5 @ 12	#5 @ 9	#5 @ 9	#5 @ 9	#5 @ 9	#6 @ 12	#6 @ 9	#6 @ 9	#6 @ 9
"d" BARS		0.20	0.20	0.21	0.23	0.24	0.26	0.29	0.30	0.32	0.35	0.37	0.39	0.44	0.46	0.48
* Conc CY/LF		19	20	21	22	24	24	27	32	33	36	38	39	43	47	49
* Reinf LB/LF		0.41, 1.85	0.48, 1.89	0.55, 1.91	0.60, 1.95	0.62, 2.08	0.62, 2.20	0.63, 2.44	0.67, 2.61	0.71, 2.72	0.75, 2.87	0.80, 2.93	0.84, 3.10	0.88, 3.20	0.91, 3.44	0.95, 3.78
**CASE II	Ser (q'o, B')	1.07, 1.80	1.12, 1.83	1.20, 1.85	1.32, 1.89	1.34, 2.05	1.36, 2.19	1.39, 2.36	1.45, 2.48	1.50, 2.64	1.55, 2.77	1.62, 2.91	1.69, 3.16	1.72, 3.23	1.79, 3.33	1.82, 3.67
	Str (q'o, B')	0.56, 2.05	0.62, 2.08	0.70, 2.10	0.75, 2.12	0.81, 2.20	0.83, 2.38	0.85, 2.49	0.91, 2.60	0.94, 2.75	0.97, 2.81	1.02, 2.91	1.09, 3.05	1.12, 3.12	1.18, 3.23	1.22, 3.50
**CASE III	Ser (q'o, B')	0.91, 2.01	0.98, 2.05	1.06, 2.04	1.19, 2.06	1.22, 2.28	1.30, 2.34	1.36, 2.40	1.41, 2.51	1.49, 2.59	1.55, 2.68	1.65, 2.76	1.71, 2.90	1.79, 3.03	1.85, 3.07	1.90, 3.33
	Str (q'o, B')															

NOTES:

1. Length of wall from ℄ pipe to end of wall is 1.5H Min. The ends of headwall need to be embedded into the slope by one foot.
2. Single circular pipe or single CMP shown for "L" headwall. For double pipe in "L" headwall, see "ELEVATION STRAIGHT HEADWALL DOUBLE CIRCULAR PIPE" or "ELEVATION STRAIGHT HEADWALL DOUBLE CMP" detail for additional information.
3. Cable railing to be installed on top of headwall when shown on Project Plans. See Standard Plan B11-47 for cable railing details.
4. Adjacent to each side of the opening, place additional reinforcement equivalent to half the interrupted main reinforcement.
5. Quantities are approximate and for design purposes only. No deduction is made for pipe or arch occupancy.
6. Provide necessary erosion protection in front of wall.
7. If precast construction is used, the design standard shall be equal to or exceed that shown here, and the bottom of footing must be roughened.

* Quantities include 1'-0" extension above the design "H" limit.
** q'o = net bearing stress (ksf), B' = effective footing width (ft)
Ser - service limit
Str - strength limit

REINFORCED CONCRETE HEADWALL
Quantities do not include added diagonals and do not consider pipe occupancy.

NOTE: Reinforced Concrete: fy = 60,000 psi
f'c = 3,600 psi
Earth Density: 120 pcf
Equivalent Fluid Pressure: 36 pcf

STATE OF CALIFORNIA
DEPARTMENT OF TRANSPORTATION

PIPE CULVERT HEADWALLS STRAIGHT AND "L"

NO SCALE

RSP D89B DATED OCTOBER 18, 2019 SUPPLEMENTS THE STANDARD PLANS BOOK DATED 2018.

REVISED STANDARD PLAN RSP D89B

2018 REVISED STANDARD PLAN RSP D89B

6-21-19

© 2018 California Department of Transportation
All Rights Reserved

Dist	COUNTY	ROUTE	POST MILES TOTAL PROJECT	SHEET No.	TOTAL SHEETS

H.R.J.
REGISTERED ELECTRICAL ENGINEER

REGISTERED PROFESSIONAL ENGINEER
Hamid Zolfaghari
No. E15636
Exp. 12-31-19
ELECTRICAL
STATE OF CALIFORNIA

October 19, 2018
PLANS APPROVAL DATE

THE STATE OF CALIFORNIA OR ITS OFFICERS OR AGENTS SHALL NOT BE RESPONSIBLE FOR THE ACCURACY OR COMPLETENESS OF SCANNED COPIES OF THIS PLAN SHEET.

TO ACCOMPANY PLANS DATED _____

ANNOTATION

SYMBOL	DESCRIPTION
AB	ABANDON. IF APPLIED TO CONDUIT, REMOVE CONDUCTORS
BC	INSTALL PULL BOX IN EXISTING CONDUIT RUN
BP	PEDESTRIAN BARRICADE, TYPE AS INDICATED ON PLAN
CB	INSTALL CONDUIT INTO EXISTING PULL BOX
CC	CONNECT NEW AND EXISTING CONDUIT. REMOVE EXISTING CONDUCTORS AND INSTALL CONDUCTORS AS INDICATED
CF	CONDUIT TO REMAIN FOR FUTURE USE. REMOVE CONDUCTORS. INSTALL PULL TAPE
DH	DETECTOR HANDHOLE
FA	FOUNDATION TO BE ABANDONED
IS	INSTALL SIGN ON SIGNAL MAST ARM
NS	NO SLIP BASE ON STANDARD
PEC	PHOTOELECTRIC CONTROL
PEU	PHOTOELECTRIC UNIT
RC	EQUIPMENT OR MATERIAL TO BE REMOVED AND BECOME THE PROPERTY OF THE CONTRACTOR
RL	RELOCATE EQUIPMENT
RR	REMOVE AND REUSE EQUIPMENT
RS	REMOVE AND SALVAGE EQUIPMENT
SC	SPLICE NEW TO EXISTING CONDUCTORS
SD	SERVICE DISCONNECT
TSP	TELEPHONE SERVICE POINT
9	SPECIFIC PROJECT NOTES

STANDARD

NEW	EXISTING	TYPE
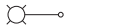		15
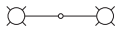	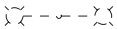	15D
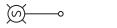	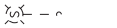	15 STRUCTURE
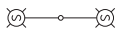	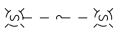	15D STRUCTURE
	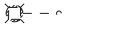	21
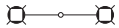	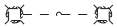	21D
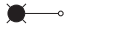	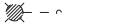	21 STRUCTURE
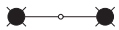	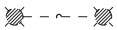	21D STRUCTURE
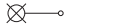	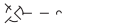	30
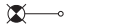		31
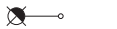	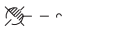	32

SOFFIT AND WALL-MOUNTED LUMINAIRES

SYMBOL	DESCRIPTION
	PENDANT SOFFIT LUMINAIRE
	FLUSH-MOUNTED SOFFIT LUMINAIRE
	WALL-MOUNTED LUMINAIRE
	EXISTING SOFFIT OR WALL-MOUNTED LUMINAIRE TO REMAIN UNMODIFIED
	EXISTING SOFFIT OR WALL-MOUNTED LUMINAIRE TO BE MODIFIED AS SPECIFIED

NOTE:
Arrow indicates "street side" of luminaire.

MISCELLANEOUS ELECTROLIERS

NEW	EXISTING	DESCRIPTION
		LUMINAIRE ON WOOD POLE
	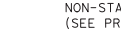	NON-STANDARD ELECTROLIER (SEE PROJECT LEGEND)
		CITY ELECTROLIER
	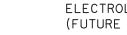	ELECTROLIER FOUNDATION (FUTURE INSTALLATION)

NOTE:

1. Luminaires shall be Roadway 2 when installed on Type 21, 21D, 30, 31 and 32 Standards, unless otherwise specified. Luminaires shall be Roadway 1 when installed on other type standards or poles, unless otherwise specified.

STATE OF CALIFORNIA
DEPARTMENT OF TRANSPORTATION

ELECTRICAL SYSTEMS (LEGEND)

NO SCALE

RSP ES-1A DATED OCTOBER 19, 2018 SUPERSEDES STANDARD PLAN ES-1A
DATED MAY 31, 2018 - PAGE 475 OF THE STANDARD PLANS BOOK DATED 2018.

REVISED STANDARD PLAN RSP ES-1A

2018 REVISED STANDARD PLAN RSP ES-1A

5-17-18

© 2020 California Department of Transportation
All Rights Reserved

Dist	COUNTY	ROUTE	POST MILES TOTAL PROJECT	SHEET No.	TOTAL SHEETS

REGISTERED ELECTRICAL ENGINEER

April 17, 2020
PLANS APPROVAL DATE

REGISTERED PROFESSIONAL ENGINEER
John L. Castro
No. E17490
Exp. 6-30-21
ELECTRICAL
STATE OF CALIFORNIA

THE STATE OF CALIFORNIA OR ITS OFFICERS OR AGENTS SHALL NOT BE RESPONSIBLE FOR THE ACCURACY OR COMPLETENESS OF SCANNED COPIES OF THIS PLAN SHEET.

TO ACCOMPANY PLANS DATED _____

CONDUIT

NEW	EXISTING	DESCRIPTION
		LIGHTING CONDUIT, UNLESS OTHERWISE INDICATED OR NOTED
		TRAFFIC SIGNAL CONDUIT
C	c	COMMUNICATION CONDUIT
T	t	TELEPHONE CONDUIT
F	f	FIRE ALARM CONDUIT
FO	fo	FIBER OPTIC CONDUIT
		CONDUIT TERMINATION
R	r	CONDUIT RISER ATTACHED TO THE STRUCTURE OR SERVICE POLE

SERVICE EQUIPMENT

NEW	EXISTING	DESCRIPTION
OH	oh	OVERHEAD LINES
U	U	WOOD POLE, "U" INDICATES UTILITY OWNED
		POLE GUY WITH ANCHOR
		UTILITY TRANSFORMER - GROUND MOUNTED
III	III	SERVICE EQUIPMENT ENCLOSURE TYPE. DOOR INDICATES FRONT OF ENCLOSURE
T		TELEPHONE DEMARCATION CABINET

POLE-MOUNTED SERVICE DESIGNATION

SYMBOL	DESCRIPTION
TYPE H SERVICE, 28'-10"	TYPE OF INSTALLATION AND POLE HEIGHT ABOVE GRADE

FLASHING BEACON

NEW	EXISTING	DESCRIPTION
R	R	FLASHING BEACON (ONE VEHICLE SIGNAL HEAD WITH BACKPLATE AND VISOR) "R" INDICATES RED INDICATION "Y" INDICATES YELLOW INDICATION
Y Y	Y Y	FLASHING BEACON WITH TYPE 15-FBS STANDARD AND A SIGN.
R R	R R	FLASHING BEACON WITH TYPES 9, 9A OR 9B SIGN UNLESS OTHERWISE SPECIFIED OR INDICATED

SIGNAL EQUIPMENT

NEW	EXISTING	DESCRIPTION
		PEDESTRIAN SIGNAL HEAD
		PUSH BUTTON ASSEMBLY POST
		PEDESTRIAN BARRICADE
		VEHICLE SIGNAL HEAD CONSISTING OF RED, YELLOW, AND GREEN SECTIONS
		VEHICLE SIGNAL HEAD WITH ANGLE VISOR
PV	PV	MODIFICATIONS OF BASIC SYMBOL: "L" INDICATES ALL NON-ARROW SECTIONS LOUVERED "LG" INDICATES LOUVERED GREEN SECTION ONLY "PV" INDICATES ALL 12" SECTIONS PROGRAMMED VISIBILITY "8" INDICATES ALL 8" SECTIONS (ONLY WHEN SPECIFIED) "PHBF" INDICATES TYPE MAS-3A FOR PEDESTRIAN HYBRID BEACON FACE
		VEHICLE SIGNAL HEAD CONSISTING OF RED, YELLOW, AND GREEN LEFT ARROW SECTIONS
		VEHICLE SIGNAL HEAD CONSISTING OF RED AND YELLOW SECTIONS WITH AN UP GREEN ARROW SECTION
		VEHICLE SIGNAL HEAD (5 SECTION) CONSISTING OF RED, YELLOW, AND GREEN SECTIONS WITH YELLOW AND GREEN RIGHT ARROW SECTIONS
		TYPE 15TS STANDARD WITH VEHICLE SIGNAL HEAD, PEDESTRIAN SIGNAL HEAD, AND LUMINAIRE
		TYPE 21TS STANDARD WITH VEHICLE SIGNAL HEAD, PEDESTRIAN SIGNAL HEAD, AND LUMINAIRE
		STANDARD WITH LUMINAIRE AND SIGNAL MAST ARMS AND ATTACHED VEHICLE SIGNAL HEADS
		TYPE 1 STANDARD WITH ATTACHED VEHICLE SIGNAL HEADS
		STANDARD WITH A SIGNAL MAST ARM, ATTACHED VEHICLE SIGNAL HEADS AND STREET NAME SIGN
		CONTROLLER ASSEMBLY. DOOR INDICATES FRONT OF CABINET
●	○	GUARD POST
		OPTICAL DETECTOR FOR THE EMERGENCY VEHICLE DETECTION

NOTES:

1. All signal sections shall be 12" unless shown otherwise.
2. Signal heads shall be provided with backplates unless shown otherwise.

OVERHEAD SIGN

NEW	EXISTING	DESCRIPTION
		SINGLE POST, SINGLE SIGN, BALANCED BUTTERFLY
		SINGLE POST, DOUBLE SIGN, BALANCED BUTTERFLY
		SINGLE POST, SINGLE SIGN, FULL CANTILEVER
		DOUBLE POST, SINGLE SIGN
		SINGLE SIGN MOUNTED ON STRUCTURE
		SINGLE POST, SINGLE SIGN, FULL CANTILEVER WITH ELECTROLIER
		DOUBLE POST, SINGLE SIGN WITH ELECTROLIER

STATE OF CALIFORNIA
DEPARTMENT OF TRANSPORTATION

ELECTRICAL SYSTEMS (LEGEND)

NO SCALE

RSP ES-1B DATED APRIL 17, 2020 SUPERSEDES RSP ES-1B DATED OCTOBER 19, 2018 AND STANDARD PLAN ES-1B DATED MAY 31, 2018 - PAGE 476 OF THE STANDARD PLANS BOOK DATED 2018.

REVISED STANDARD PLAN RSP ES-1B

2018 REVISED STANDARD PLAN RSP ES-1B

12-12-19

© 2020 California Department of Transportation
All Rights Reserved

Dist	COUNTY	ROUTE	POST MILES TOTAL PROJECT	SHEET No.	TOTAL SHEETS

REGISTERED ELECTRICAL ENGINEER

April 17, 2020
PLANS APPROVAL DATE

REGISTERED PROFESSIONAL ENGINEER
John L. Castro
No. E17490
Exp. 6-30-21
ELECTRICAL
STATE OF CALIFORNIA

THE STATE OF CALIFORNIA OR ITS OFFICERS OR AGENTS SHALL NOT BE RESPONSIBLE FOR THE ACCURACY OR COMPLETENESS OF SCANNED COPIES OF THIS PLAN SHEET.

TO ACCOMPANY PLANS DATED _____

EQUIPMENT DESIGNATION

SIGN:

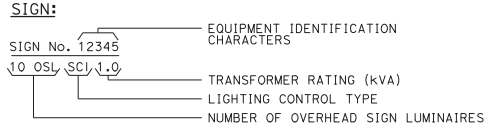

LIGHTING STANDARD, SIGNAL AND LIGHTING STANDARD:

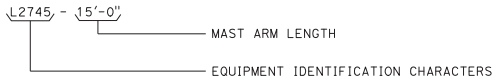

SOFFIT:

NOTE:

EXISTING EQUIPMENT IDENTIFICATION CHARACTERS ARE SHOWN IN PARENTHESIS

MISCELLANEOUS EQUIPMENT

NEW	EXISTING	DESCRIPTION
CMS	cms	CHANGEABLE MESSAGE SIGN
		CAMERA
		HIGHWAY ADVISORY RADIO POLE AND ANTENNA
EMS	ems	EXTINGUISHABLE MESSAGE SIGN
M V	m v	DETECTION DEVICE M = MICROWAVE SENSOR V = VIDEO IMAGE SENSOR
		RADAR SPEED FEEDBACK SIGN

CONDUIT AND CONDUCTORS

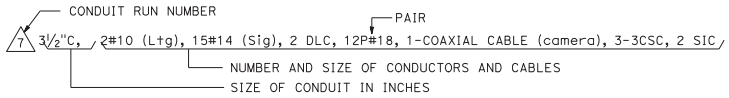

DETAILS

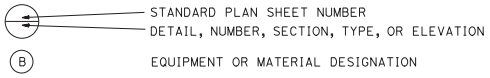

PHASE

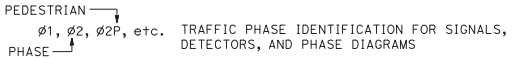

WIRING COMPONENTS

SYMBOL	DESCRIPTION
	EXTERNAL CONDUCTOR
	CONDUCTOR OR BUS
	TIE POINT
	CONTACTOR COIL
	CONTACTOR, NO CONTACT
	TERMINAL BLOCKS
	CONTACTOR, NC CONTACT
	ENCLOSURE BOND
	GROUNDING ELECTRODE
	CIRCUIT BREAKER
R	RECEPTACLE

HANDHOLES, PULL BOXES, AND VAULTS

NEW	EXISTING	DESCRIPTION
DH	dh	DETECTOR HANDHOLE
		PULL BOX, No. 5 UNLESS OTHERWISE INDICATED
V	V	VAULT

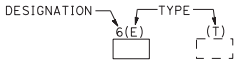

DESIGNATIONS:
3 No. 3 PULL BOX
5 No. 5 PULL BOX
6 No. 6 PULL BOX
7 No. 7 PULL BOX (CEILING)
8 No. 8 PULL BOX
9 No. 9 PULL BOX (STRUCTURE)
9A No. 9A PULL BOX (STRUCTURE)

TYPE:
(E) EXTENDED PULL BOX
(T) TRAFFIC PULL BOX
(TR) TAMPER-RESISTANT PULL BOX

VEHICLE DETECTOR DESIGNATION

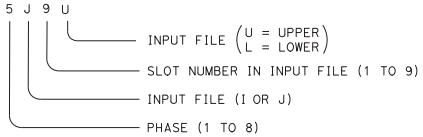

DETECTORS

NEW	EXISTING	DESCRIPTION
		TYPE A LOOP DETECTOR. OUTLINE OF SAW CUT SHOWN
		TYPE B LOOP DETECTOR. OUTLINE OF SAW CUT SHOWN
		TYPE C LOOP DETECTOR. OUTLINE OF SAW CUT SHOWN
		TYPE D LOOP DETECTOR. OUTLINE OF SAW CUT SHOWN
		TYPE E LOOP DETECTOR. OUTLINE OF SAW CUT SHOWN
		TYPE F LOOP DETECTOR. OUTLINE OF SAW CUT SHOWN
		TYPE Q LOOP DETECTOR. OUTLINE OF SAW CUT SHOWN
		MICROWAVE OR VIDEO DETECTION ZONE

STATE OF CALIFORNIA
DEPARTMENT OF TRANSPORTATION

ELECTRICAL SYSTEMS (LEGEND)

NO SCALE

RSP ES-1C DATED APRIL 17, 2020 SUPERSEDES RSP ES-1C DATED OCTOBER 18, 2019 AND RSP ES-1C DATED OCTOBER 19, 2018 AND STANDARD PLAN ES-1C DATED MAY 31, 2018 - PAGE 477 OF THE STANDARD PLANS BOOK DATED 2018.

REVISED STANDARD PLAN RSP ES-1C

2018 REVISED STANDARD PLAN RSP ES-1C

12-13-19

© 2020 California Department of Transportation
All Rights Reserved

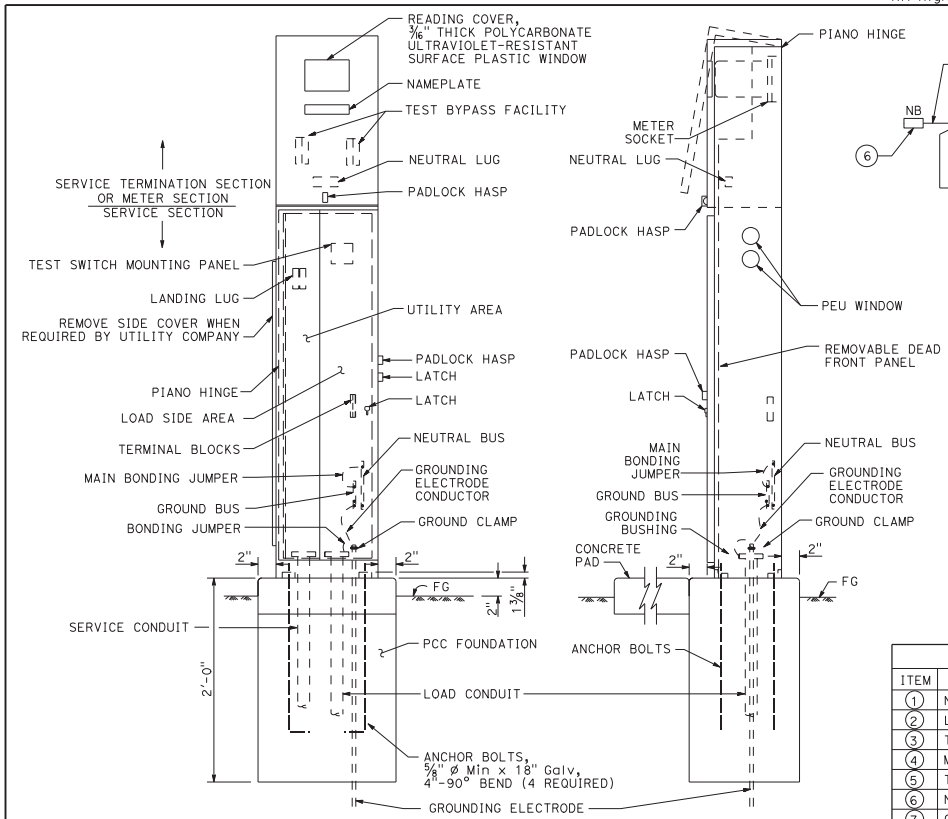

TYPE III-AF SERVICE EQUIPMENT ENCLOSURE (TYPICAL)

DETAIL A

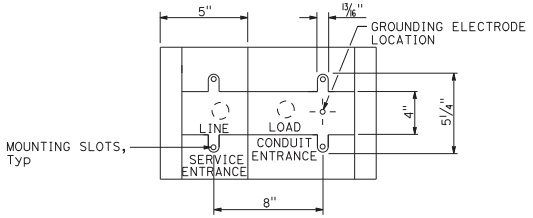

BASE FOR TYPE III-A SERVICE EQUIPMENT ENCLOSURE

DETAIL B

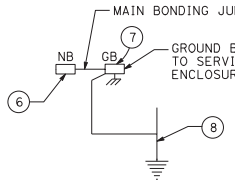

DETAIL D

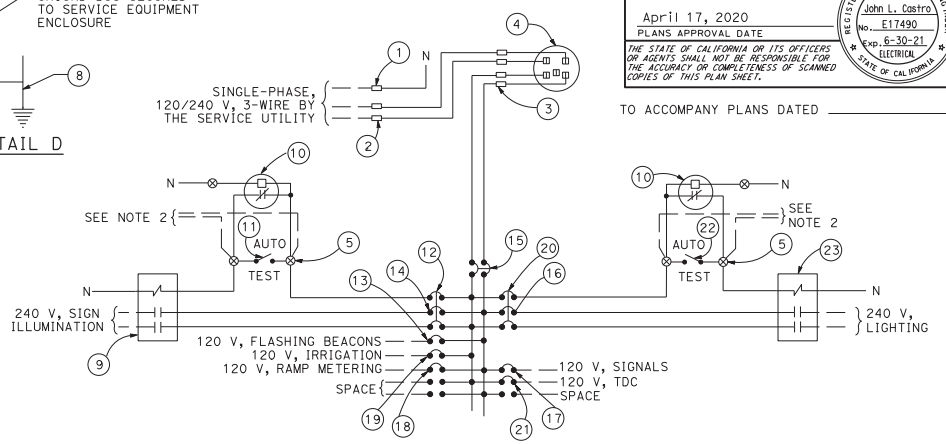

120/240 V SERVICE WIRING DIAGRAM (TYPICAL)

DETAIL C

TYPE III-A SERVICE EQUIPMENT ENCLOSURE LEGEND (120/240 V)					
ITEM	COMPONENT	NAMEPLATE DESCRIPTION	ITEM	COMPONENT	NAMEPLATE DESCRIPTION
(1)	NEUTRAL LUG		(13)	15 A, 120 V, 1P, CB	FLASHING BEACON
(2)	LANDING LUG		(14)	30 A, 240 V, 2P, CB	SIGN ILLUMINATION
(3)	TEST BYPASS FACILITY		(15)	100 A, 240 V, 2P, CB	MAIN BREAKER
(4)	METER SOCKET AND SUPPORT		(16)	30 A, 240 V, 2P, CB	LIGHTING
(5)	TERMINAL BLOCKS		(17)	50 A, 120 V, 1P, CB	SIGNALS
(6)	NEUTRAL BUS		(18)	30 A, 120 V, 1P, CB	RAMP METERING
(7)	GROUND BUS		(19)	20 A, 120 V, 1P, CB	IRRIGATION
(8)	GROUNDING ELECTRODE		(20)	15 A, 120 V, 1P, CB	LIGHTING CONTROL
(9)	30 A, 2P, NO CONTACTOR	SIGN ILLUMINATION	(21)	20 A, 120 V, 1P, CB	TELEPHONE DEMARCATION CABINET
(10)	PHOTOELECTRIC UNIT (NOTE 4)	PEU	(22)	15 A, 1P, TEST SWITCH	LIGHTING TEST SWITCH
(11)	15 A, 1P, TEST SWITCH	SIGN ILLUMINATION TEST SWITCH	(23)	60 A, 2P, NO CONTACTOR	LIGHTING
(12)	15 A, 120 V, 1P, CB	SIGN ILLUMINATION CONTROL			

NOTES:

1. Unless otherwise indicated on the plans, service equipment items shall be provided for each service equipment enclosure as shown.
2. Connect to remote test switch mounted on lighting standards, sign post, or structure when required.
3. Items (1) and (6) shall be isolated from the service equipment enclosure.
4. Type V photoelectric control shall be used unless otherwise indicated on the plans.
5. Item (12) and (20) shall be ganged operated CB.
6. The plan shows the approximate location of devices within the enclosure. Components may be rearranged, however, the "working" clearances within the service equipment enclosure shall be maintained.

Dist	COUNTY	ROUTE	POST MILES TOTAL PROJECT	SHEET No.	TOTAL SHEETS

REGISTERED ELECTRICAL ENGINEER

April 17, 2020
PLANS APPROVAL DATE

REGISTERED PROFESSIONAL ENGINEER
John L. Castro
No. E17490
Exp. 6-30-21
ELECTRICAL
STATE OF CALIFORNIA

THE STATE OF CALIFORNIA OR ITS OFFICERS OR AGENTS SHALL NOT BE RESPONSIBLE FOR THE ACCURACY OR COMPLETENESS OF SCANNED COPIES OF THIS PLAN SHEET.

TO ACCOMPANY PLANS DATED _____

STATE OF CALIFORNIA
DEPARTMENT OF TRANSPORTATION

ELECTRICAL SYSTEMS (SERVICE EQUIPMENT ENCLOSURE AND TYPICAL WIRING DIAGRAM, TYPE III-A SERIES)

NO SCALE

RSP ES-2D DATED APRIL 17, 2020 SUPERSEDES RSP ES-2D DATED OCTOBER 19, 2018 AND STANDARD PLAN ES-2D DATED MAY 31, 2018 - PAGE 481 OF THE STANDARD PLANS BOOK DATED 2018.

REVISED STANDARD PLAN RSP ES-2D

2018 REVISED STANDARD PLAN RSP ES-2D

12-12-19

© 2020 California Department of Transportation
All Rights Reserved

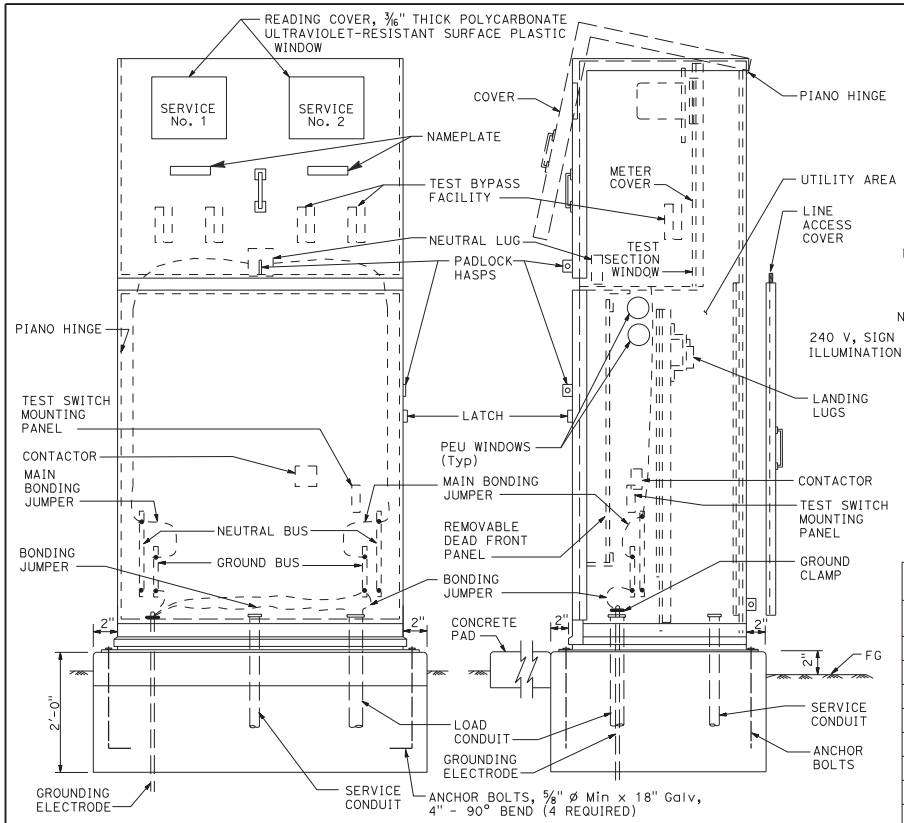

FRONT VIEW SIDE VIEW

TYPE III-CF SERVICE EQUIPMENT ENCLOSURE (TYPICAL)

DETAIL A

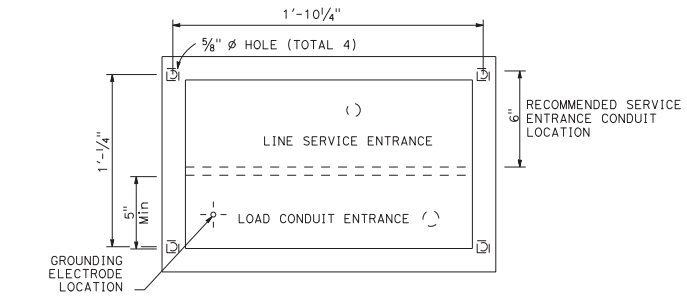

BASE FOR TYPE III-C SERVICE EQUIPMENT ENCLOSURE

DETAIL B

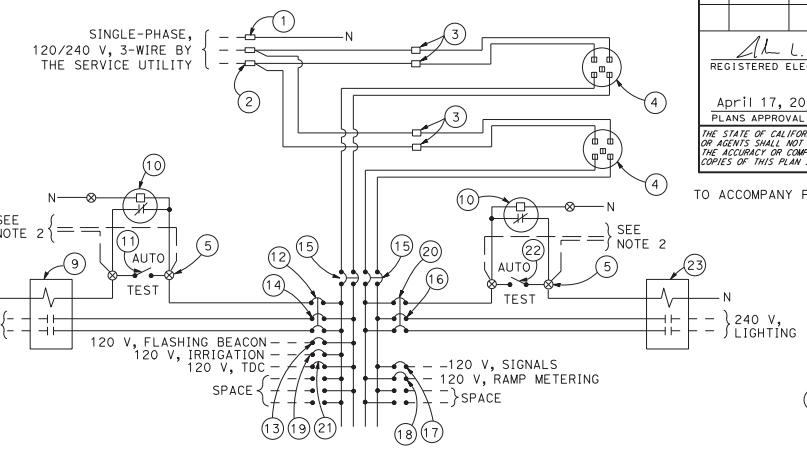

120/240 V SERVICE WIRING DIAGRAM (TYPICAL)

DETAIL C

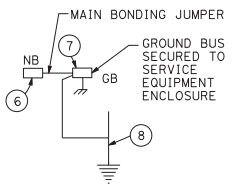

DETAIL D

Dist	COUNTY	ROUTE	POST MILES TOTAL PROJECT	SHEET No.	TOTAL SHEETS

REGISTERED ELECTRICAL ENGINEER

April 17, 2020
PLANS APPROVAL DATE

THE STATE OF CALIFORNIA OR ITS OFFICERS OR AGENTS SHALL NOT BE RESPONSIBLE FOR THE ACCURACY OR COMPLETENESS OF SCANNED COPIES OF THIS PLAN SHEET.

REGISTERED PROFESSIONAL ENGINEER
John L. Castro
No. E17490
Exp. 6-30-21
ELECTRICAL
STATE OF CALIFORNIA

TO ACCOMPANY PLANS DATED _____

TYPE III-C SERVICE EQUIPMENT ENCLOSURE LEGEND (120/240 V)

ITEM	COMPONENT	NAMEPLATE DESCRIPTION	ITEM	COMPONENT	NAMEPLATE DESCRIPTION
(1)	NEUTRAL LUG		(13)	15 A, 120 V, 1P, CB	FLASHING BEACON
(2)	LANDING LUG		(14)	30 A, 240 V, 2P, CB	SIGN ILLUMINATION
(3)	TEST BYPASS FACILITY		(15)	100 A, 240 V, 2P, CB	MAIN BREAKER
(4)	METER SOCKET AND SUPPORT		(16)	30 A, 240 V, 2P, CB	LIGHTING
(5)	TERMINAL BLOCKS		(17)	50 A, 120 V, 1P, CB	SIGNALS
(6)	NEUTRAL BUS		(18)	30 A, 120 V, 1P, CB	RAMP METERING
(7)	GROUND BUS		(19)	20 A, 120 V, 1P, CB	IRRIGATION
(8)	GROUNDING ELECTRODE		(20)	15 A, 120 V, 1P, CB	LIGHTING CONTROL
(9)	30 A, 2P, NO CONTACTOR	SIGN ILLUMINATION	(21)	20 A, 120 V, 1P, CB	TELEPHONE DEMARCATION CABINET
(10)	PHOTOELECTRIC UNIT (NOTE 4)	PEU	(22)	15 A, 1P, TEST SWITCH	LIGHTING TEST SWITCH
(11)	15 A, 1P, TEST SWITCH	SIGN ILLUMINATION TEST SWITCH	(23)	60 A, 2P, NO CONTACTOR	LIGHTING
(12)	15 A, 120 V, 1P, CB	SIGN ILLUMINATION CONTROL			

NOTES:

1. Unless otherwise indicated on the plans, service equipment items shall be provided for each service equipment enclosure as shown.
2. Connect to remote test switch mounted on lighting standards, sign post, or structure when required.
3. Items (1) and (6) shall be isolated from the service equipment enclosure.
4. Type V photoelectric control shall be used unless otherwise indicated on the plans.
5. Item (12) and (20) shall be ganged operated CB.
6. The plan shows the approximate location of devices within the enclosure. Components may be rearranged, however, the "working" clearances within the service equipment enclosure shall be maintained.

STATE OF CALIFORNIA
DEPARTMENT OF TRANSPORTATION

ELECTRICAL SYSTEMS (SERVICE EQUIPMENT ENCLOSURE AND TYPICAL WIRING DIAGRAM, TYPE III-C SERIES)

NO SCALE

RSP ES-2F DATED APRIL 17, 2020 SUPERSEDES RSP ES-2F DATED OCTOBER 19, 2018 AND STANDARD PLAN ES-2F DATED MAY 31, 2018 - PAGE 483 OF THE STANDARD PLANS BOOK DATED 2018.

REVISED STANDARD PLAN RSP ES-2F

12-12-19

2018 REVISED STANDARD PLAN RSP ES-2F

© 2020 California Department of Transportation
All Rights Reserved

NOTES:

1. Where telephone interconnect is required, a minimum of 5" clear vertical space shall be provided inside the cabinet for the equipment.
2. Telephone interconnect conductors shall be enclosed in a ¾"C or larger conduit through the foundation. Type 4 conduit shall be used to separate telephone and power conductors in cabinets.

Dist	COUNTY	ROUTE	POST MILES TOTAL PROJECT	SHEET No.	TOTAL SHEETS

REGISTERED ELECTRICAL ENGINEER

October 16, 2020
PLANS APPROVAL DATE

REGISTERED PROFESSIONAL ENGINEER
John L. Castro
No. E17490
Exp. 6-30-21
ELECTRICAL
STATE OF CALIFORNIA

THE STATE OF CALIFORNIA OR ITS OFFICERS OR AGENTS SHALL NOT BE RESPONSIBLE FOR THE ACCURACY OR COMPLETENESS OF SCANNED COPIES OF THIS PLAN SHEET.

TO ACCOMPANY PLANS DATED _____

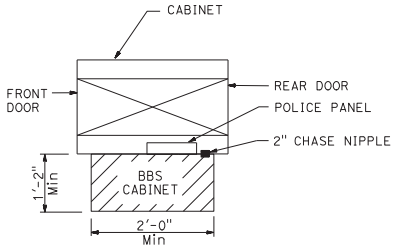

TOP VIEW

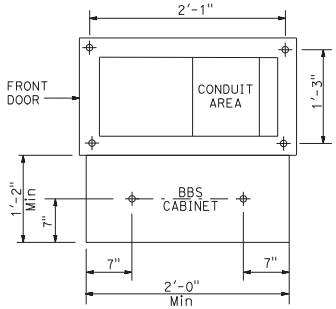

BASE PLAN FOR LX-BBS CABINET MOUNTED TO THE MODEL 332L CABINET

(FOR DIMENSIONS AND DETAILS NOT SHOWN, SEE CABINET HOUSING DETAILS OF THE TRANSPORTATION ELECTRICAL EQUIPMENT SPECIFICATION (TEES))

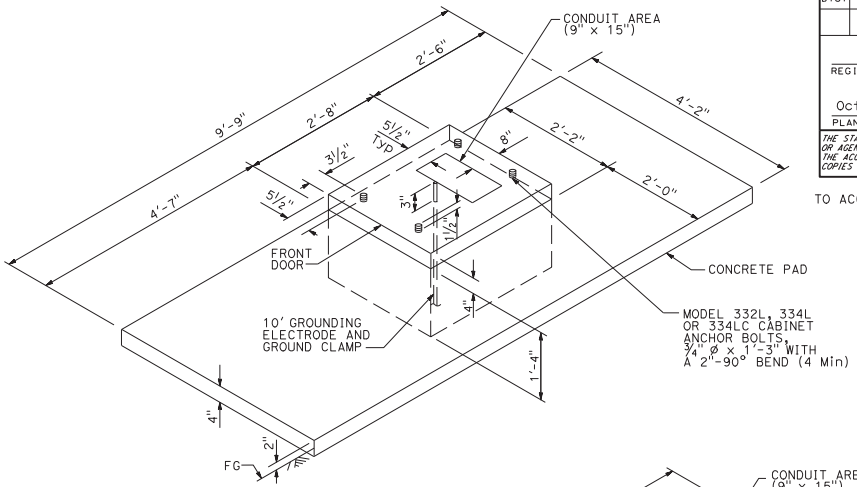

FOUNDATION AND PAD DETAIL

Model 332L, 334L, and 334LC

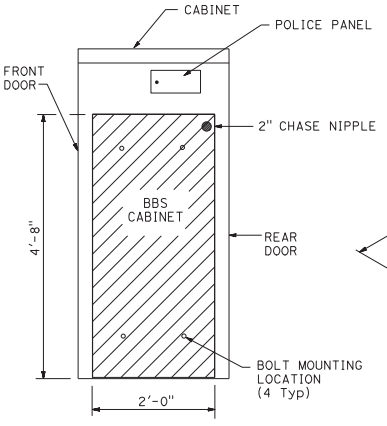

SIDE VIEW

LX-BBS CABINET MOUNTED TO THE MODEL 332L CABINET

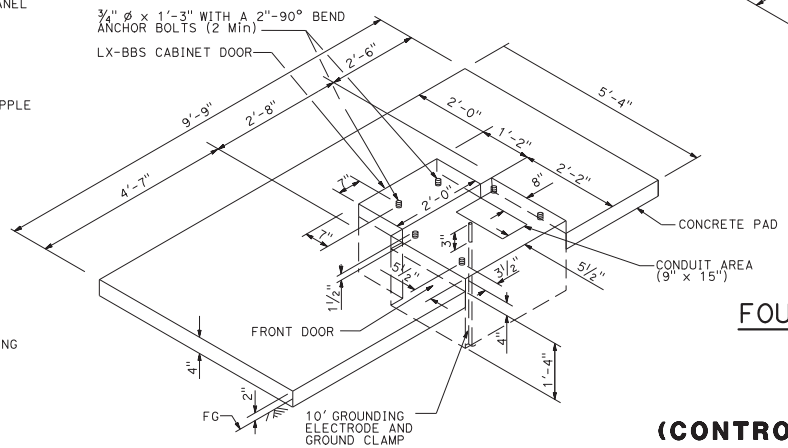

LEFT SIDE INSTALLATION

DETAIL A

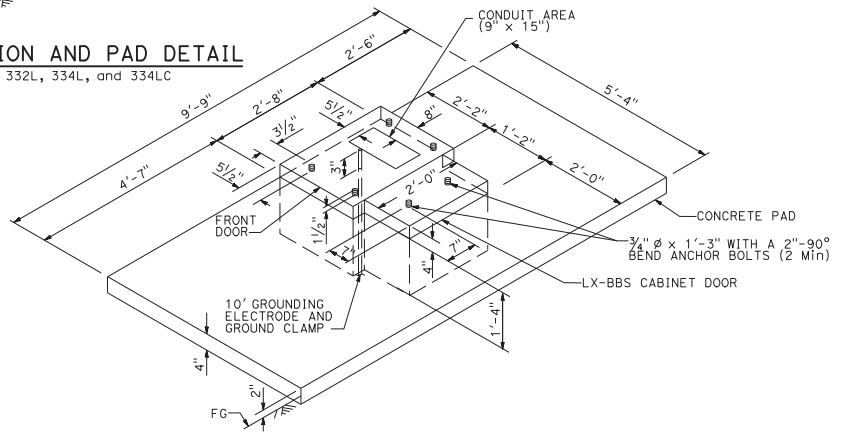

RIGHT SIDE INSTALLATION

DETAIL B

MODEL 332L CABINET
FOUNDATION DETAIL WITH LX-BATTERY BACKUP SYSTEM

STATE OF CALIFORNIA
DEPARTMENT OF TRANSPORTATION

ELECTRICAL SYSTEMS
(CONTROLLER CABINET FOUNDATION AND PAD DETAILS)

NO SCALE

RSP ES-3C DATED OCTOBER 16, 2020 SUPERSEDES RSP ES-3C DATED OCTOBER 19, 2018 AND STANDARD PLAN ES-3C DATED MAY 31, 2018 - PAGE 487 OF THE STANDARD PLANS BOOK DATED 2018.

REVISED STANDARD PLAN RSP ES-3C

2018 REVISED STANDARD PLAN RSP ES-3C

6-9-20

© 2020 California Department of Transportation
All Rights Reserved

Dist	COUNTY	ROUTE	POST MILES TOTAL PROJECT	SHEET No.	TOTAL SHEETS

REGISTERED ELECTRICAL ENGINEER

April 17, 2020
PLANS APPROVAL DATE

REGISTERED PROFESSIONAL ENGINEER
John L. Castro
No. E17490
Exp. 6-30-21
ELECTRICAL
STATE OF CALIFORNIA

THE STATE OF CALIFORNIA OR ITS OFFICERS OR AGENTS SHALL NOT BE RESPONSIBLE FOR THE ACCURACY OR COMPLETENESS OF SCANNED COPIES OF THIS PLAN SHEET.

TO ACCOMPANY PLANS DATED _____

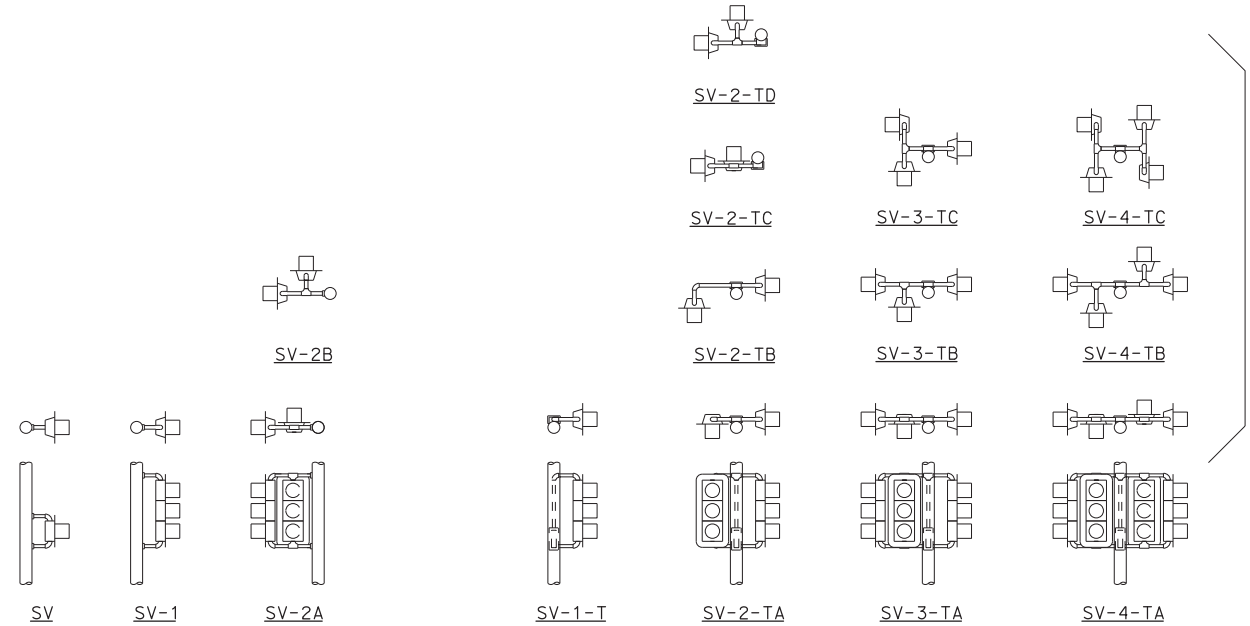

PLAN VIEW OF OTHER SIDE MOUNTINGS

SIDE MOUNTINGS

ABBREVIATIONS:

SV	SIDE MOUNTED SIGNAL HEADS
T	TERMINAL COMPARTMENT
TV	TOP MOUNTED SIGNAL HEADS
1, 2, 3, 4	NUMBER OF SIGNAL FACES
A, B, C, D	CONFIGURATION OF SIGNALS

NOTES:

1. Mountings shall be oriented to provide maximum horizontal clearance to adjacent roadway.
2. See Revised Standard Plans RSP ES-4D and RSP ES-4E for attachment fitting details.

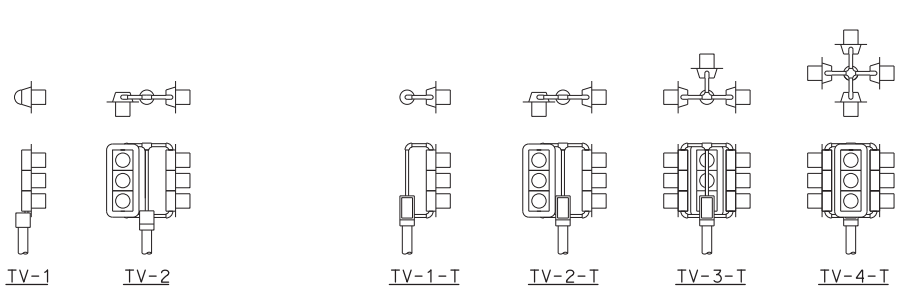

PLAN VIEW OF TOP MOUNTINGS

TOP MOUNTINGS

STATE OF CALIFORNIA
DEPARTMENT OF TRANSPORTATION

ELECTRICAL SYSTEMS (SIGNAL HEAD MOUNTING)

NO SCALE

RSP ES-4A DATED APRIL 17, 2020 SUPERSEDES RSP ES-4A DATED OCTOBER 19, 2018 AND STANDARD PLAN ES-4A DATED MAY 31, 2018 - PAGE 499 OF THE STANDARD PLANS BOOK DATED 2018.

REVISED STANDARD PLAN RSP ES-4A

2018 REVISED STANDARD PLAN RSP ES-4A

12-12-19

© 2018 California Department of Transportation
All Rights Reserved

Dist	COUNTY	ROUTE	POST MILES TOTAL PROJECT	SHEET No.	TOTAL SHEETS

H.R.J
REGISTERED ELECTRICAL ENGINEER

REGISTERED PROFESSIONAL ENGINEER
Hamid Zolfaghari
No. E15636
Exp. 12-31-19
ELECTRICAL
STATE OF CALIFORNIA

October 19, 2018
PLANS APPROVAL DATE

THE STATE OF CALIFORNIA OR ITS OFFICERS OR AGENTS SHALL NOT BE RESPONSIBLE FOR THE ACCURACY OR COMPLETENESS OF SCANNED COPIES OF THIS PLAN SHEET.

TO ACCOMPANY PLANS DATED _____

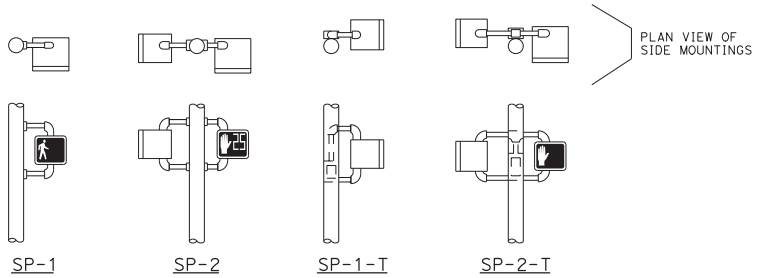

SIDE MOUNTINGS

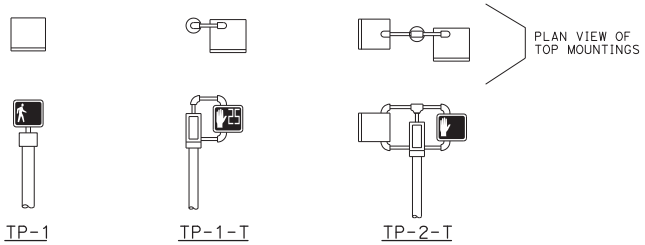

TOP MOUNTINGS

PEDESTRIAN SIGNAL HEAD MOUNTINGS

DETAIL A

PERSON WALKING INTERVAL FLASHING UPRAISED HAND INTERVAL STEADY UPRAISED HAND INTERVAL

LED COUNTDOWN PEDESTRIAN SIGNAL FACE MODULE

DETAIL B

NOTES:

1. Mounting shall be oriented to provide maximum horizontal clearance to adjacent roadway.
2. See Revised Standard Plan RSP ES-4D for attachment fittings details.

ABBREVIATIONS:

1, 2	NUMBER OF SIGNAL FACES
SP	SIDE MOUNTED PEDESTRIAN SIGNAL
T	TERMINAL COMPARTMENT
TP	TOP MOUNTED PEDESTRIAN SIGNAL

STATE OF CALIFORNIA
DEPARTMENT OF TRANSPORTATION

ELECTRICAL SYSTEMS (PEDESTRIAN SIGNAL HEADS)

NO SCALE

RSP ES-4B DATED OCTOBER 19, 2018 SUPERSEDES STANDARD PLAN ES-4B DATED MAY 31, 2018 - PAGE 500 OF THE STANDARD PLANS BOOK DATED 2018.

REVISED STANDARD PLAN RSP ES-4B

2018 REVISED STANDARD PLAN RSP ES-4B

5-29-18

© 2020 California Department of Transportation
All Rights Reserved

Dist	COUNTY	ROUTE	POST MILES TOTAL PROJECT	SHEET No.	TOTAL SHEETS

REGISTERED ELECTRICAL ENGINEER

April 17, 2020
PLANS APPROVAL DATE

THE STATE OF CALIFORNIA OR ITS OFFICERS OR AGENTS SHALL NOT BE RESPONSIBLE FOR THE ACCURACY OR COMPLETENESS OF SCANNED COPIES OF THIS PLAN SHEET.

REGISTERED PROFESSIONAL ENGINEER
John L. Castro
No. E17490
Exp. 6-30-21
ELECTRICAL
STATE OF CALIFORNIA

TO ACCOMPANY PLANS DATED _____

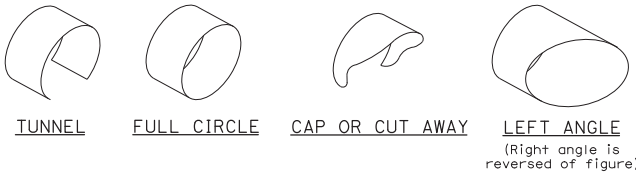

VISORS

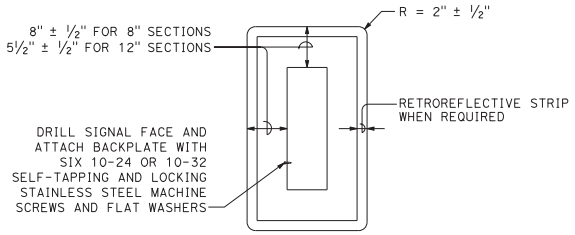

8" AND 12" SECTIONS

BACKPLATE

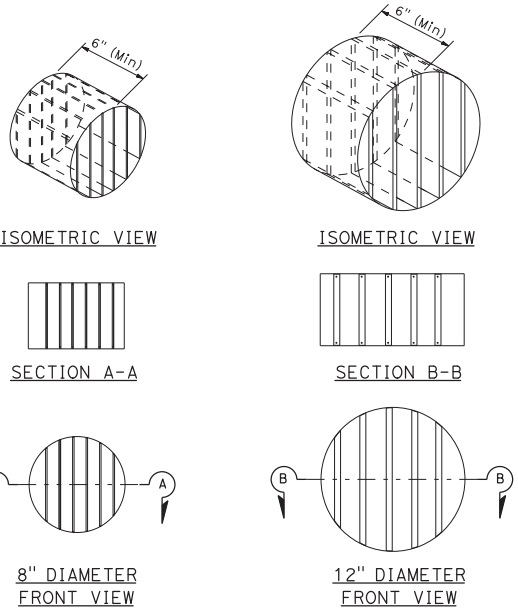

DIRECTIONAL LOUVER

Directional louvers shall be oriented and secured in place with one plated brass machine screw and nut.

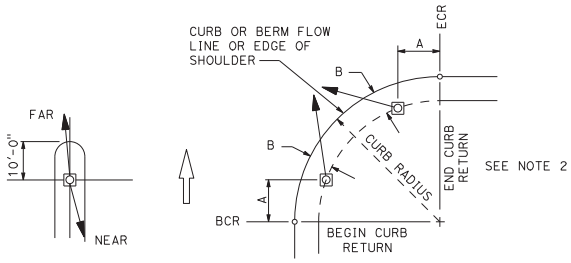

NOTES:

1. Typical signal pole placement unless dimensioned on plans.
2. For A and B dimensions, see Pole Schedule.

SIGNAL STANDARD PLACEMENT DIMENSIONS AND EQUIPMENT LOCATIONS

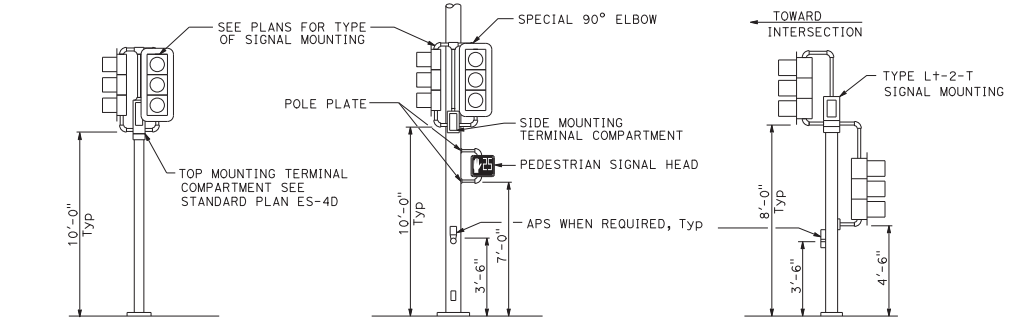

TOP MOUNTED SIGNALS (TV)
Type 1-A, 1-B, 1-C and 1-D standard as indicated on the plans

SIDE MOUNTED SIGNALS (SV AND SP)
Normally used on standards with luminaire or signal mast arm

LEFT TURN LANE SIGNAL
Type 1-A, 1-B, 1-C and 1-D standard as indicated on plans

TYPICAL SIGNAL HEAD INSTALLATIONS

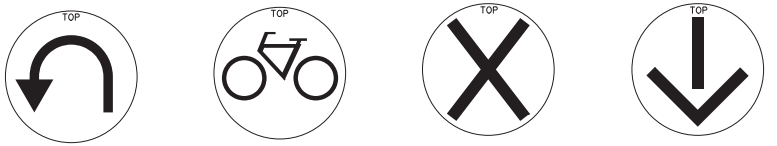

U-TURN | BICYCLE | LANE CONTROL | LANE CONTROL

SIGNAL FACES

STATE OF CALIFORNIA
DEPARTMENT OF TRANSPORTATION

ELECTRICAL SYSTEMS (SIGNAL HEADS AND MOUNTINGS)

NO SCALE

RSP ES-4C DATED APRIL 17, 2020 SUPERSEDES STANDARD PLAN ES-4C DATED MAY 31, 2018 - PAGE 501 OF THE STANDARD PLANS BOOK DATED 2018.

REVISED STANDARD PLAN RSP ES-4C

2018 REVISED STANDARD PLAN RSP ES-4C

12-20-19

© 2018 California Department of Transportation
All Rights Reserved

Dist	COUNTY	ROUTE	POST MILES TOTAL PROJECT	SHEET No.	TOTAL SHEETS

H.R.J.
REGISTERED ELECTRICAL ENGINEER

Hamid Zolfaghari
No. E15636
Exp. 12-31-19
ELECTRICAL
REGISTERED PROFESSIONAL ENGINEER
STATE OF CALIFORNIA

October 19, 2018
PLANS APPROVAL DATE

THE STATE OF CALIFORNIA OR ITS OFFICERS OR AGENTS SHALL NOT BE RESPONSIBLE FOR THE ACCURACY OR COMPLETENESS OF SCANNED COPIES OF THIS PLAN SHEET.

TO ACCOMPANY PLANS DATED _____

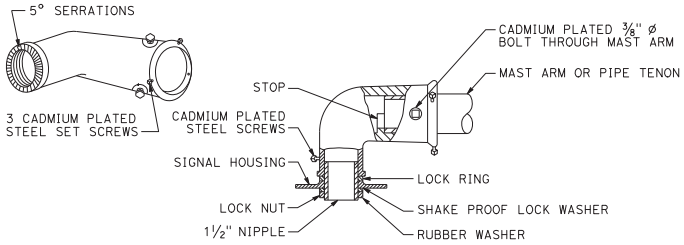

TYPE MAT
MAST ARM MOUNTING
For 2 NPS pipe, see Note 1.

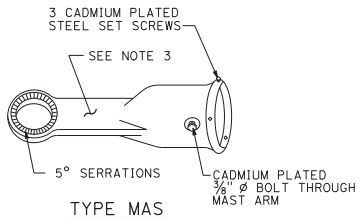

TYPE MAS
MAST ARM MOUNTING
For 2 NPS pipe, see Note 1.

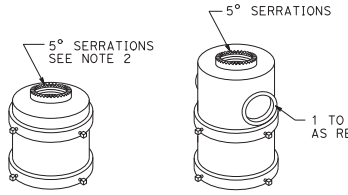

TOP MOUNTINGS
For 4 NPS pipe, see Note 2.

SIGNAL SLIP FITTERS

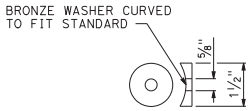

DETAIL C

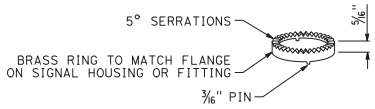

LOCK RING
Use where locking ring is not integral With signal housing or fitting.

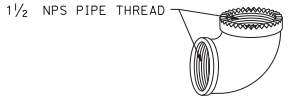

SPECIAL 90° ELBOW
One for each signal head, except those With special slip fitter mounting

NOTES:

1. After mast arm signal has been plumbed and secured, drill 7/16" hole through mast arm tenon in line with slip fitter hole. Place a cadmium plated ⅜" ø galvanized bolt with washer under bolt head through hole and secure with washer, nut, and locknut. Seal openings between mast arm mountings and mast arm with mastic.
2. Threaded top mounted slip fitter openings shall be 1½ NPS. Serrations in fittings shall match those on bottom of signal heads or in lock ring. Top opening shall be offset when backplate is used.
3. Wireway shall have a cross section area of 0.95 square inch minimum. Minimum width of ½".

MISCELLANEOUS MOUNTING HARDWARE

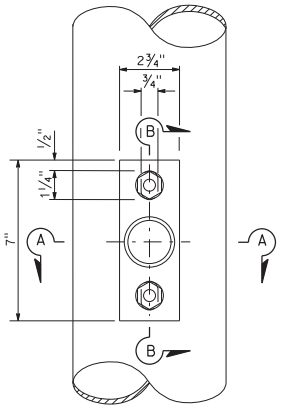

TOP VIEW

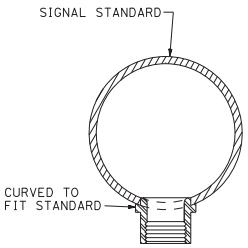

SECTION A-A

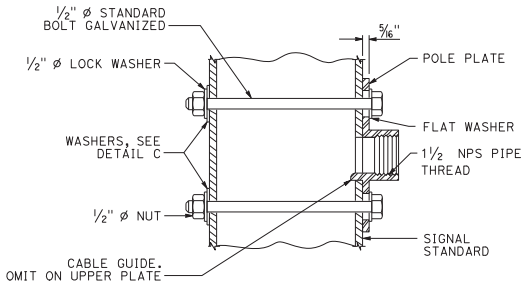

SECTION B-B

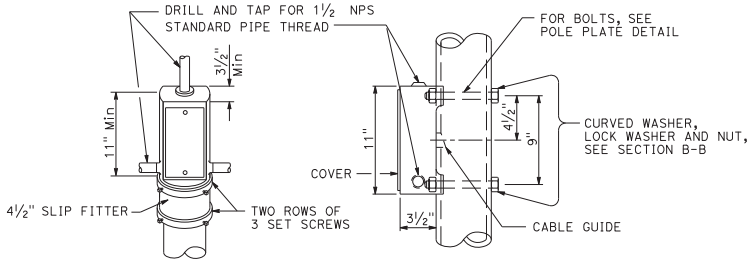

TOP MOUNTING

SIDE MOUNTING

TERMINAL COMPARTMENT

POLE PLATE FOR SIDE MOUNTED SIGNAL HEAD WITHOUT TERMINAL COMPARTMENT

STATE OF CALIFORNIA
DEPARTMENT OF TRANSPORTATION

ELECTRICAL SYSTEMS (SIGNAL HEAD MOUNTING)

NO SCALE

RSP ES-4D DATED OCTOBER 19, 2018 SUPERSEDES STANDARD PLAN ES-4D DATED MAY 31, 2018 - PAGE 502 OF THE STANDARD PLANS BOOK DATED 2018.

REVISED STANDARD PLAN RSP ES-4D

2018 REVISED STANDARD PLAN RSP ES-4D

4-17-18

© 2020 California Department of Transportation
All Rights Reserved

Dist	COUNTY	ROUTE	POST MILES TOTAL PROJECT	SHEET No.	TOTAL SHEETS

REGISTERED ELECTRICAL ENGINEER

April 17, 2020
PLANS APPROVAL DATE

REGISTERED PROFESSIONAL ENGINEER
John L. Castro
No. E17490
Exp. 6-30-21
ELECTRICAL
STATE OF CALIFORNIA

THE STATE OF CALIFORNIA OR ITS OFFICERS OR AGENTS SHALL NOT BE RESPONSIBLE FOR THE ACCURACY OR COMPLETENESS OF SCANNED COPIES OF THIS PLAN SHEET.

TO ACCOMPANY PLANS DATED _____

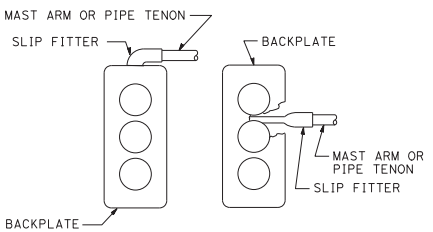

TYPE MAT TYPE MAS

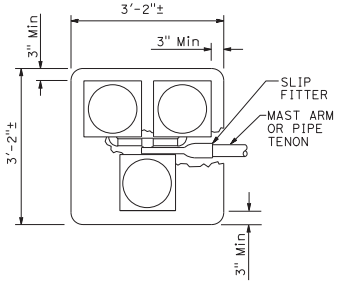

TYPE MAS-3A

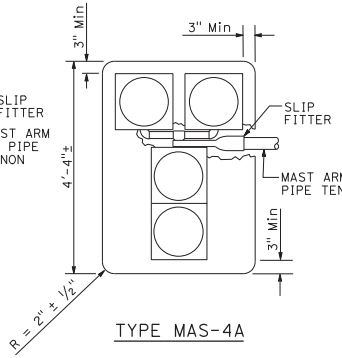

TYPE MAS-4A

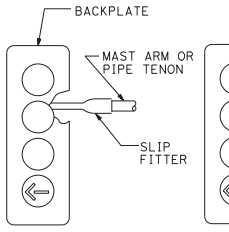

TYPE MAS-4B

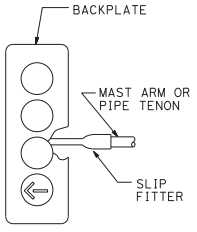

TYPE MAS-4C

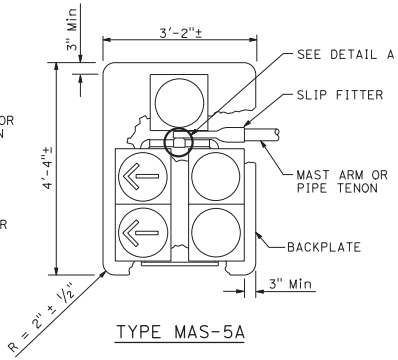

TYPE MAS-5A

MAST ARM MOUNTINGS

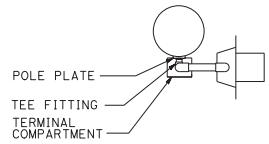

PLAN

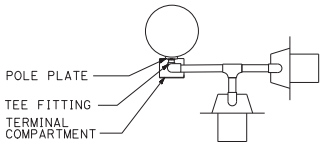

PLAN

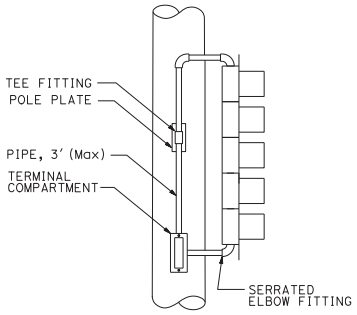

SIDE VIEW

SV-1-T WITH 5 SIGNAL SECTIONS

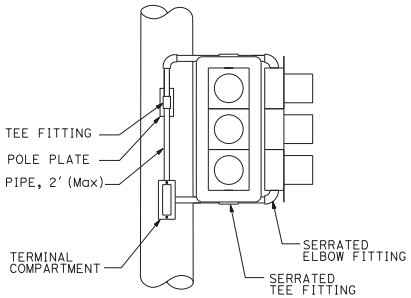

SIDE VIEW

SV-2-TD

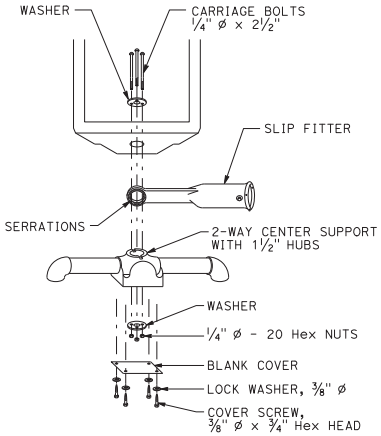

DETAIL A

STATE OF CALIFORNIA
DEPARTMENT OF TRANSPORTATION

ELECTRICAL SYSTEMS (SIGNAL HEADS AND OPTICAL DETECTOR MOUNTING)

NO SCALE

RSP ES-4E DATED APRIL 17, 2020 SUPERSEDES RSP ES-4E DATED OCTOBER 19, 2018 AND STANDARD PLAN ES-4E DATED MAY 31, 2018 - PAGE 503 OF THE STANDARD PLANS BOOK DATED 2018.

REVISED STANDARD PLAN RSP ES-4E

2018 REVISED STANDARD PLAN RSP ES-4E

12-12-19

© 2018 California Department of Transportation
All Rights Reserved

Dist	COUNTY	ROUTE	POST MILES TOTAL PROJECT	SHEET No.	TOTAL SHEETS

H.R.J
REGISTERED ELECTRICAL ENGINEER

REGISTERED PROFESSIONAL ENGINEER
Hamid Zolfaghari
No. E15636
Exp. 12-31-19
ELECTRICAL
STATE OF CALIFORNIA

October 19, 2018
PLANS APPROVAL DATE

THE STATE OF CALIFORNIA OR ITS OFFICERS OR AGENTS SHALL NOT BE RESPONSIBLE FOR THE ACCURACY OR COMPLETENESS OF SCANNED COPIES OF THIS PLAN SHEET.

TO ACCOMPANY PLANS DATED _____

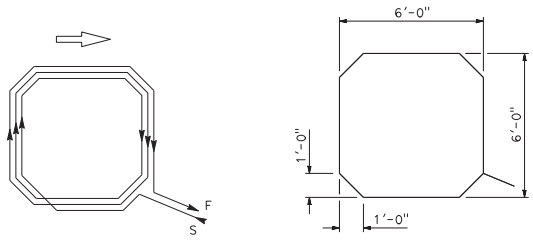

WINDING DETAIL SAW CUT DETAIL

TYPE A LOOP DETECTOR CONFIGURATION

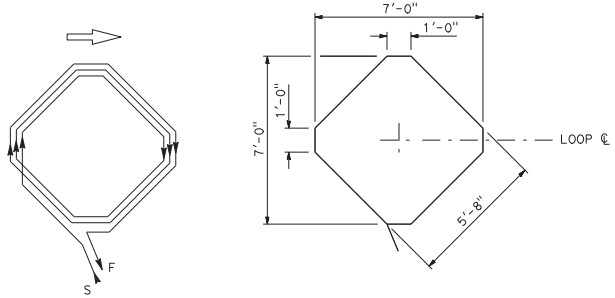

WINDING DETAIL SAW CUT DETAIL

TYPE B LOOP DETECTOR CONFIGURATION

NOTES:

1. Round corners of acute angle saw cuts to prevent damage to conductors.
2. Typical distance separating loops from edge to edge is 10' for Type A, B, D, E, and F installation in single lane.
3. Use Type D and F loops for limit line detection and bicycle lanes.

TO ACCOMPANY PLANS DATED _____

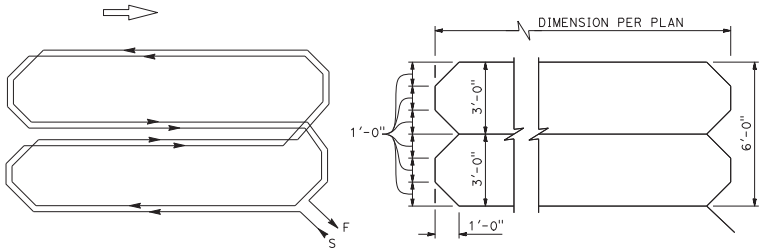

WINDING DETAIL SAW CUT DETAIL

TYPE C LOOP DETECTOR CONFIGURATION

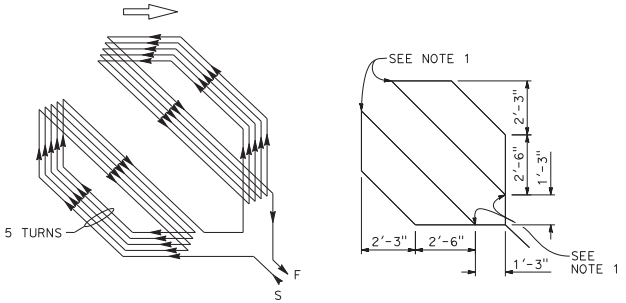

WINDING DETAIL SAW CUT DETAIL

TYPE D LOOP DETECTOR CONFIGURATION

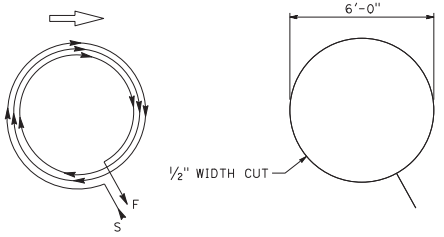

WINDING DETAIL SAW CUT DETAIL

TYPE E LOOP DETECTOR CONFIGURATION

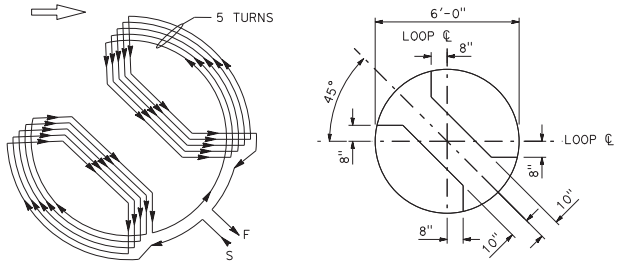

WINDING DETAIL SAW CUT DETAIL

TYPE F LOOP DETECTOR CONFIGURATION

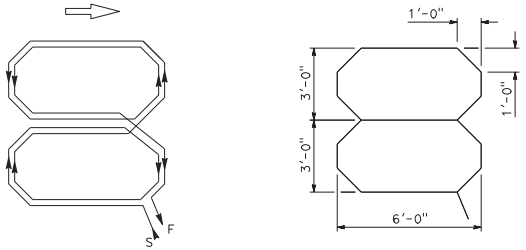

WINDING DETAIL SAW CUT DETAIL

TYPE Q LOOP DETECTOR CONFIGURATION

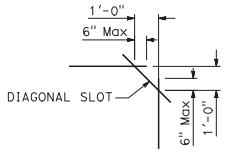

PLAN VIEW OF DIAGONAL SLOT AT CORNERS

STATE OF CALIFORNIA
DEPARTMENT OF TRANSPORTATION

ELECTRICAL SYSTEMS (DETECTORS)

NO SCALE

RSP ES-5B DATED OCTOBER 19, 2018 SUPERSEDES STANDARD PLAN ES-5B
DATED MAY 31, 2018- PAGE 505 OF THE STANDARD PLANS BOOK DATED 2018.

REVISED STANDARD PLAN RSP ES-5B

2018 REVISED STANDARD PLAN RSP ES-5B

2-27-18

© 2018 California Department of Transportation
All Rights Reserved

Dist	COUNTY	ROUTE	POST MILES TOTAL PROJECT	SHEET No.	TOTAL SHEETS

H. R. J.
REGISTERED ELECTRICAL ENGINEER

REGISTERED PROFESSIONAL ENGINEER
Hamid Zolfaghari
No. E15636
Exp. 12-31-19
ELECTRICAL
STATE OF CALIFORNIA

October 19, 2018
PLANS APPROVAL DATE

THE STATE OF CALIFORNIA OR ITS OFFICERS OR AGENTS SHALL NOT BE RESPONSIBLE FOR THE ACCURACY OR COMPLETENESS OF SCANNED COPIES OF THIS PLAN SHEET.

TO ACCOMPANY PLANS DATED _____

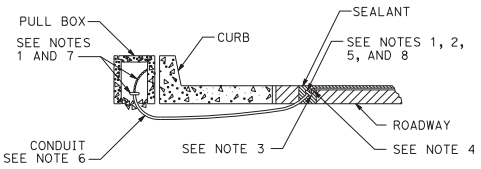

TYPE A

CURB TERMINATION DETAIL

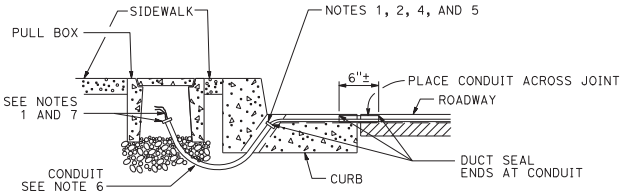

CROSS SECTION

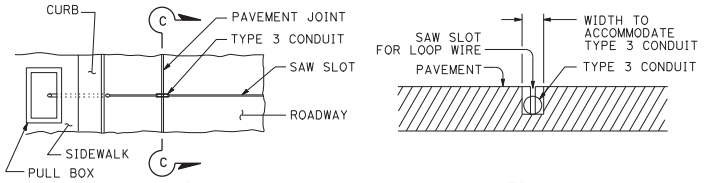

PLAN VIEW

SECTION C-C

TYPE B

CURB TERMINATION DETAIL

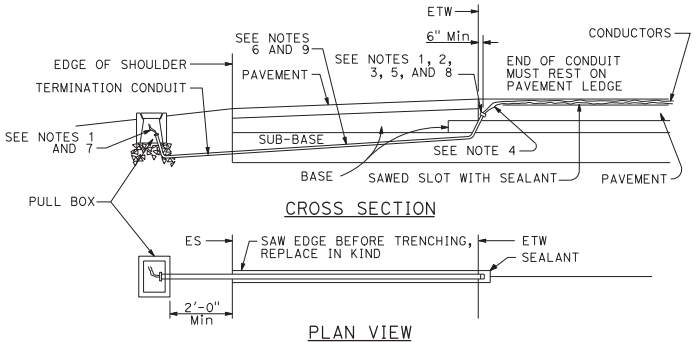

CROSS SECTION

PLAN VIEW

SHOULDER TERMINATION DETAILS

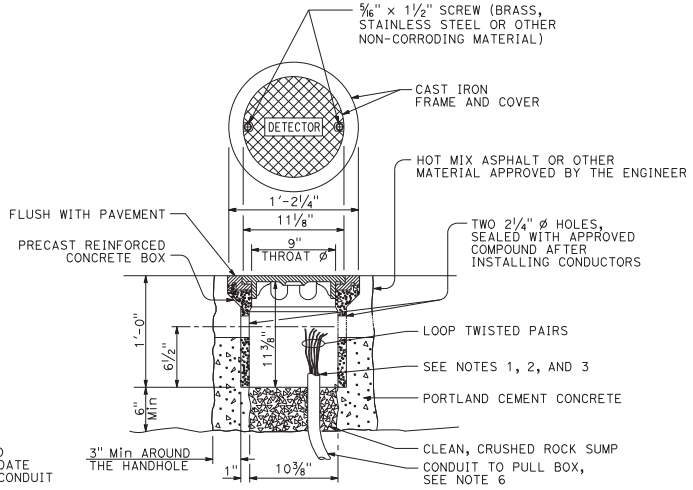

DETECTOR HANDHOLE DETAIL

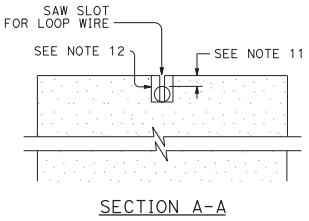

SECTION A-A

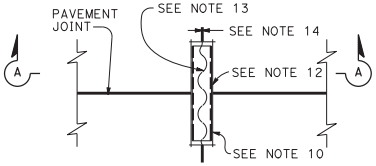

PLAN VIEW

TYPICAL LOOP LEAD-IN DETAIL AT PAVEMENT JOINT

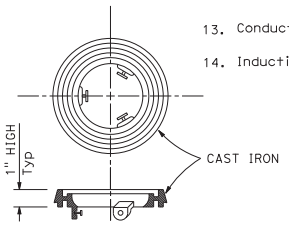

LOCKING GRADE RING

NOTES:

1. Bushing shall be used at end of conduit.
2. Tape detector conductors 3" each side of bushings.
3. Install duct seal compound to each end of termination conduit before installing sealant.
4. Round all sharp edges where detector conductors have to pass.
5. End of conduit shall be 3⅛" below roadway surface.
6.

Conduit size	Loop conductors
1"C minimum	1 to 2 pairs
1½"C minimum	3 to 4 pairs
2"C minimum	5 or more pairs

7. Splice detector conductors to detector lead-in-cable.
8. Location of detector handhole when shown on plans.
9. When the shoulder and traveled way are paved with the same material and there is no joint between them, the conduit shall extend only 2'-0" into the shoulder pavement.
10. ¾"C, Type 3 conduit 6" long minimum, plug both ends with duct compound to keep out sealant.
11. ½" Minimum between top of conduit and pavement surface.
12. Sawcut shall not exceed 1" in width and ⅛" longer than conduit to be installed.
13. Conductors with ½" minimum slack inside conduit.
14. Inductive loop detector saw slot.

STATE OF CALIFORNIA
DEPARTMENT OF TRANSPORTATION

ELECTRICAL SYSTEMS (CURB AND SHOULDER TERMINATION, TRENCH, AND HANDHOLE DETAILS)

NO SCALE

RSP ES-5D DATED OCTOBER 19, 2018 SUPERSEDES STANDARD PLAN ES-5D DATED MAY 31, 2018 - PAGE 507 OF THE STANDARD PLANS BOOK DATED 2018.

REVISED STANDARD PLAN RSP ES-5D

2018 REVISED STANDARD PLAN RSP ES-5D

5-2-18

© 2018 California Department of Transportation
All Rights Reserved

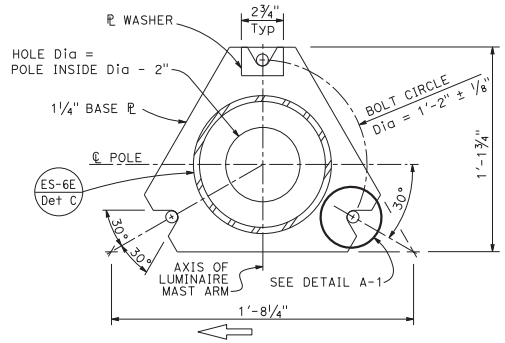

BASE PLATE
DETAIL A

DETAIL A-1

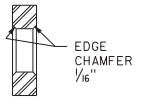

SECTION A-A

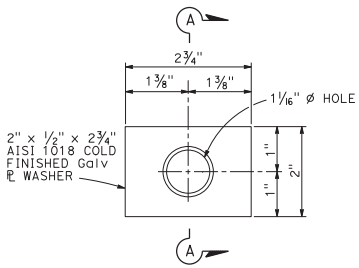

PLATE WASHER
DETAIL D

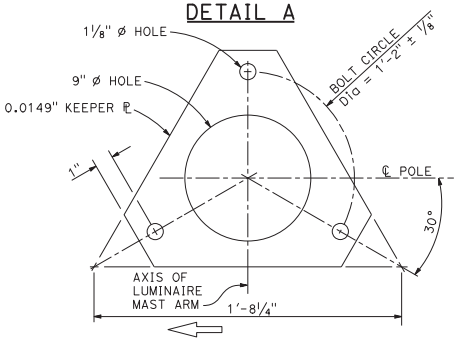

KEEPER PLATE
DETAIL B

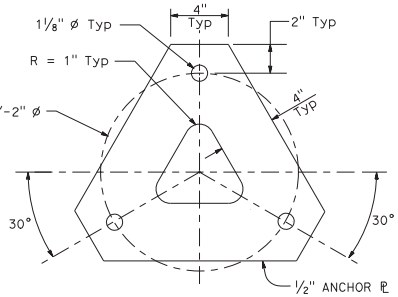

ANCHOR PLATE
DETAIL E

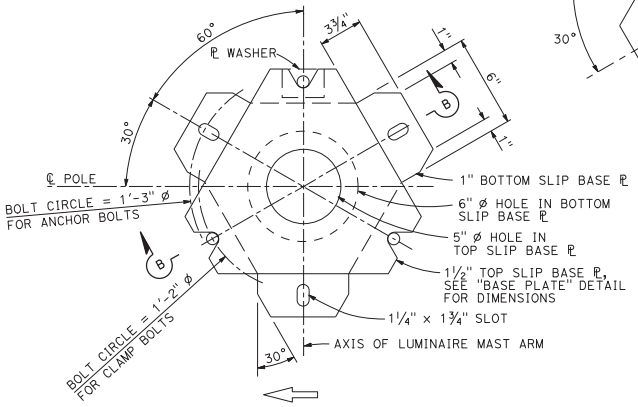

BOTTOM PLATE
DETAIL C

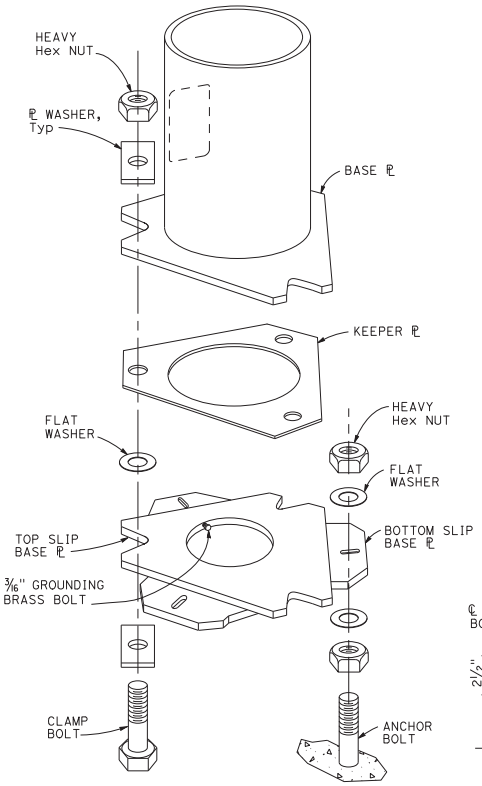

SLIP BASE DETAIL
DETAIL F

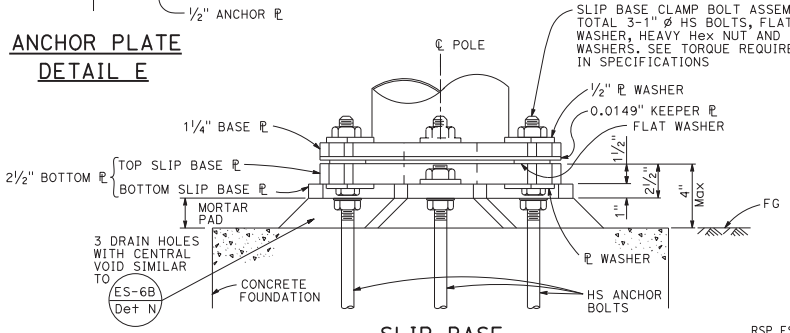

SLIP BASE
ELEVATION A

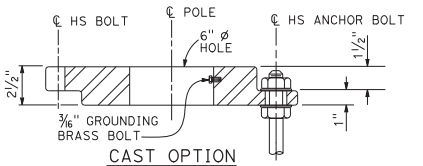

CAST OPTION

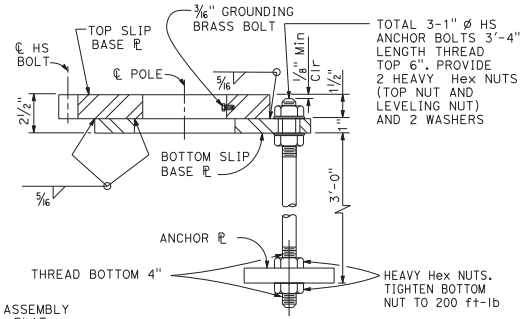

WELDED OPTION
SECTION B-B

NOTES:

1. 1" ø HS anchor bolts. For clamp bolts, see specifications.
2. Conduit shall not protrude more than 2" above top of foundation.
3. Handhole shall be located on the downstream side of traffic.
4. For Type 30 fixed base and for Type 31 fixed base, see Notes 2 and 3 on Standard Plan ES-6E.

Dist	COUNTY	ROUTE	POST MILES TOTAL PROJECT	SHEET No.	TOTAL SHEETS

REGISTERED CIVIL ENGINEER

October 19, 2018
PLANS APPROVAL DATE

REGISTERED PROFESSIONAL ENGINEER — Stanley P. Johnson — No. C57793 — Exp. 3-31-20 — CIVIL — STATE OF CALIFORNIA

THE STATE OF CALIFORNIA OR ITS OFFICERS OR AGENTS SHALL NOT BE RESPONSIBLE FOR THE ACCURACY OR COMPLETENESS OF SCANNED COPIES OF THIS PLAN SHEET.

TO ACCOMPANY PLANS DATED _____

STATE OF CALIFORNIA
DEPARTMENT OF TRANSPORTATION

ELECTRICAL SYSTEMS (LIGHTING STANDARD, SLIP BASE PLATE)

NO SCALE

RSP ES-6F DATED OCTOBER 19, 2018 SUPERSEDES STANDARD PLAN ES-6F DATED MAY 31, 2018 - PAGE 513 OF THE STANDARD PLANS BOOK DATED 2018.

REVISED STANDARD PLAN RSP ES-6F

2018 REVISED STANDARD PLAN RSP ES-6F

5-21-18

© 2018 California Department of Transportation
All Rights Reserved

Dist	COUNTY	ROUTE	POST MILES TOTAL PROJECT	SHEET No.	TOTAL SHEETS

REGISTERED CIVIL ENGINEER

October 19, 2018
PLANS APPROVAL DATE

Stanley P. Johnson
No. C57793
Exp. 3-31-20
CIVIL
REGISTERED PROFESSIONAL ENGINEER
STATE OF CALIFORNIA

THE STATE OF CALIFORNIA OR ITS OFFICERS OR AGENTS SHALL NOT BE RESPONSIBLE FOR THE ACCURACY OR COMPLETENESS OF SCANNED COPIES OF THIS PLAN SHEET.

TO ACCOMPANY PLANS DATED _____

NOTES:

1. For additional notes, details and data for Type 15TS and Type 21TS Standards, see Standard Plan ES-6A.
2. Handhole shall be located on the downstream side of traffic.

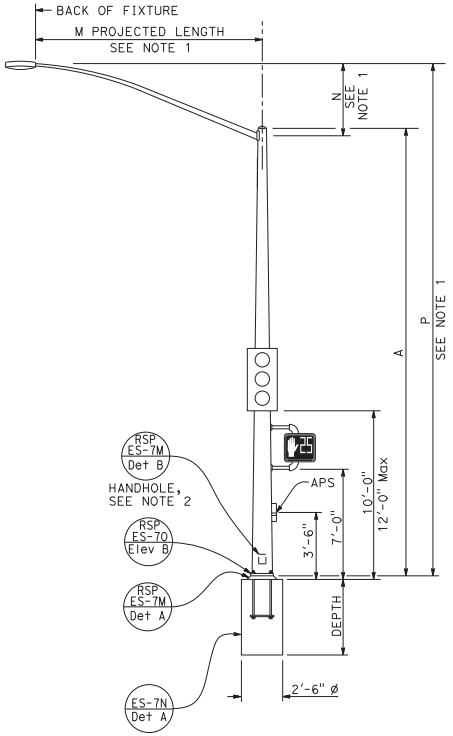

TYPE 15TS AND 21TS STANDARD
ELEVATION A
(See Note 1)

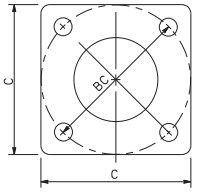

BASE PLATE
TYPE 15TS AND 21TS
DETAIL A

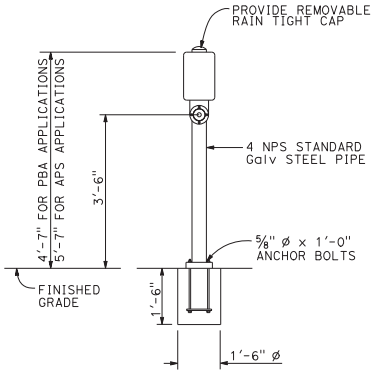

ELEVATION

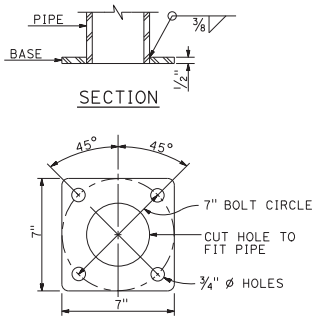

BASE PLATE
PBA POST

PUSH BUTTON ASSEMBLY POST
DETAIL B

POLE TYPE	POLE DATA				BASE PLATE DATA				CIDH
	A HEIGHT	Min OD BASE	Min OD TOP	WALL THICKNESS	C	BC = BOLT CIRCLE	THICKNESS	ANCHOR BOLT SIZE	DEPTH
15TS	30'-0"	8"	3 11/16"	0.1793"	1'-1 1/2"	1'-0"	2"	1 1/2" Ø x 42"	7'-6"
21TS	35'-0"	9 3/8"	3 3/16"		1'-3"	1'-2"			8'-6"

STATE OF CALIFORNIA
DEPARTMENT OF TRANSPORTATION

ELECTRICAL SYSTEMS (SIGNAL AND LIGHTING STANDARD, TYPE TS, AND PUSH BUTTON ASSEMBLY POST)

NO SCALE

RSP ES-7A DATED OCTOBER 19, 2018 SUPERSEDES STANDARD PLAN ES-7A
DATED MAY 31, 2018 - PAGE 515 OF THE STANDARD PLANS BOOK DATED 2018.

REVISED STANDARD PLAN RSP ES-7A

2018 REVISED STANDARD PLAN RSP ES-7A

5-31-18

© 2018 California Department of Transportation
All Rights Reserved

Dist	COUNTY	ROUTE	POST MILES TOTAL PROJECT	SHEET No.	TOTAL SHEETS

REGISTERED CIVIL ENGINEER

October 19, 2018
PLANS APPROVAL DATE

Stanley P. Johnson
No. C57793
Exp. 3-31-20
CIVIL
REGISTERED PROFESSIONAL ENGINEER
STATE OF CALIFORNIA

THE STATE OF CALIFORNIA OR ITS OFFICERS OR AGENTS SHALL NOT BE RESPONSIBLE FOR THE ACCURACY OR COMPLETENESS OF SCANNED COPIES OF THIS PLAN SHEET.

TO ACCOMPANY PLANS DATED _____

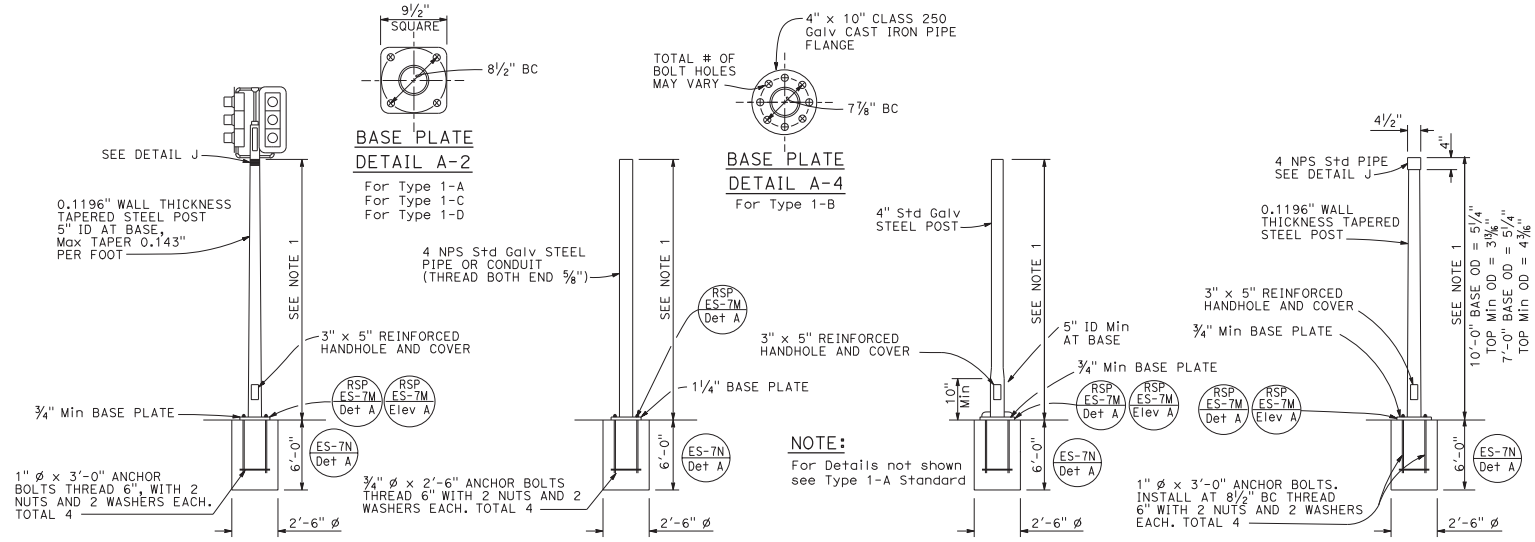

TYPE 1 SIGNAL STANDARDS
DETAIL A

NOTES:

1. Standards shall be 12'-0"±2" for flashing beacons, 10'-0" ± 2" for vehicle signals, and 7'-0" ± 2" for pedestrian signals unless shorter pole is noted on project plans.
2. Top of standards shall be 4 " OD.
3. Conduits shall extend 2" maximum above finished surface of foundation and for Types 1-A, 1-C and 1-D shall be sloped toward handhole.
4. Anchor bolts shall be bonded to conduit or grounding conductor.
5. For additional notes and details, see Revised Standard Plan RSP ES-7M, and Standard Plan ES-7N.
6. Pour foundation concrete against undisturbed soil.
7. For standards with handhole, locate in the downstream side of traffic.
8. Coupling nuts to be used only when shown or specified on project plans.

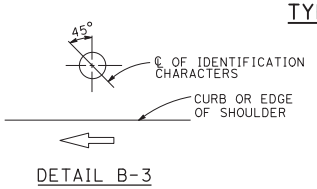

DETAIL B-3

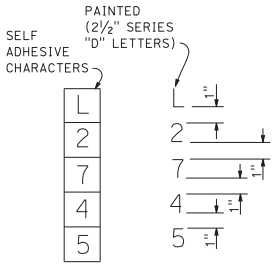

IDENTIFICATION CHARACTER DETAIL
DETAIL B-1

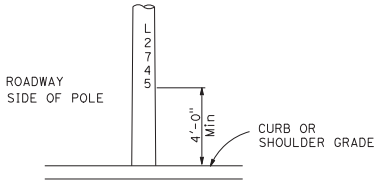

TYPICAL IDENTIFICATION CHARACTER FORMAT
DETAIL B-2

LOCATION OF EQUIPMENT IDENTIFICATION CHARACTERS ON STANDARDS AND POSTS
DETAIL B

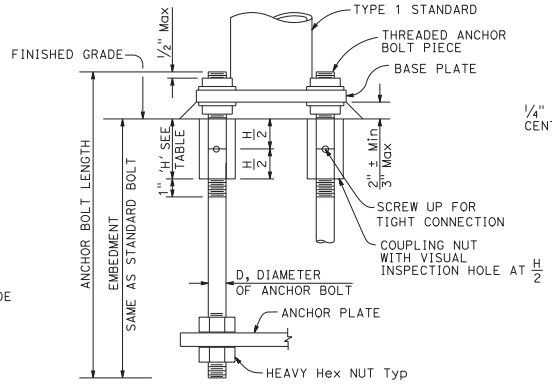

ANCHOR BOLTS WITH SLEEVE NUTS
DETAIL C
(See Note 8)

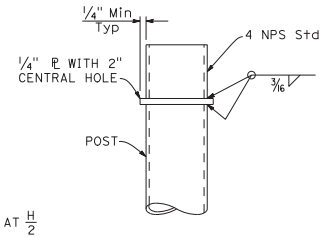

DETAIL J

COUPLING NUT TABLE	
BOLT DIAMETER	NUT TABLE THICKNESS 'H'
¾"	2¼"
1"	3"

STATE OF CALIFORNIA
DEPARTMENT OF TRANSPORTATION

ELECTRICAL SYSTEMS (SIGNAL AND LIGHTING STANDARD, TYPE 1 AND EQUIPMENT IDENTIFICATION CHARACTERS)

NO SCALE

RSP ES-7B DATED OCTOBER 19, 2018 SUPERSEDES STANDARD PLAN ES-7B
DATED MAY 31, 2018 - PAGE 516 OF THE STANDARD PLANS BOOK DATED 2018.

REVISED STANDARD PLAN RSP ES-7B

2018 REVISED STANDARD PLAN RSP ES-7B

5-21-18

© 2020 California Department of Transportation
All Rights Reserved

Dist	COUNTY	ROUTE	POST MILES TOTAL PROJECT	SHEET No.	TOTAL SHEETS

REGISTERED CIVIL ENGINEER

April 17, 2020
PLANS APPROVAL DATE

Stanley P. Johnson
No. C57793
Exp. 3-31-22
CIVIL
STATE OF CALIFORNIA

THE STATE OF CALIFORNIA OR ITS OFFICERS OR AGENTS SHALL NOT BE RESPONSIBLE FOR THE ACCURACY OR COMPLETENESS OF SCANNED COPIES OF THIS PLAN SHEET.

TO ACCOMPANY PLANS DATED

NOTE: Handhole shall be located on the downstream side of traffic.

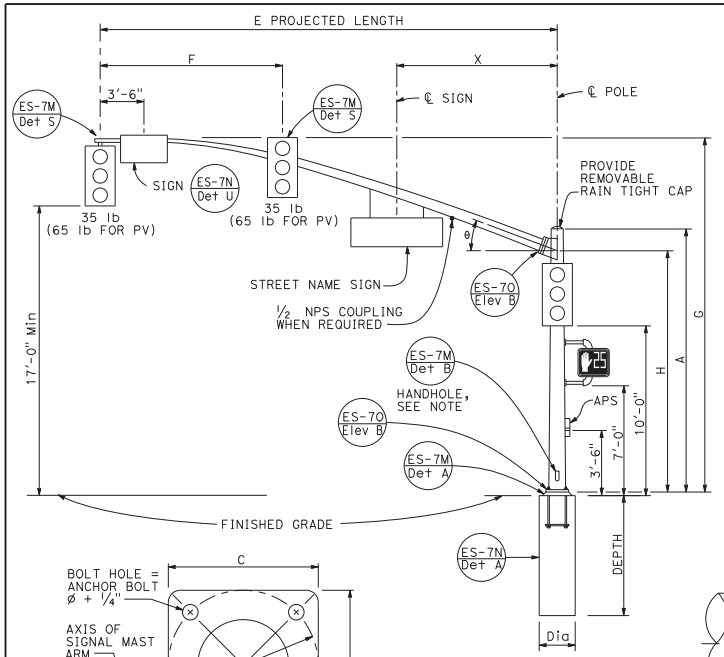

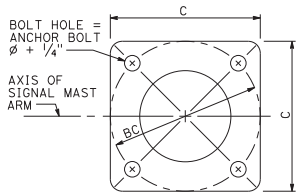

BASE PLATE
DETAIL B

TYPE 18-4-100,
23-4-100, 27-4-100
ELEVATION A

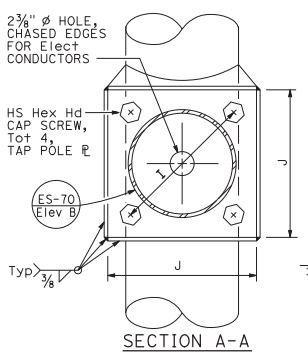

SECTION A-A

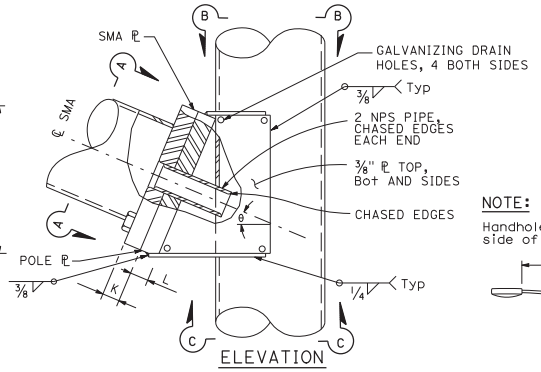

ELEVATION

SIGNAL MAST ARM CONNECTION
DETAIL A

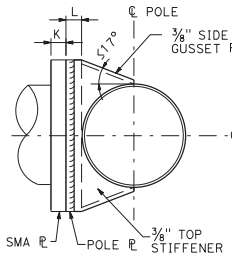

SECTION B-B

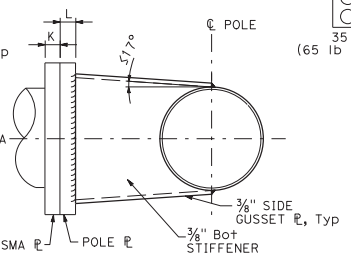

SECTION C-C

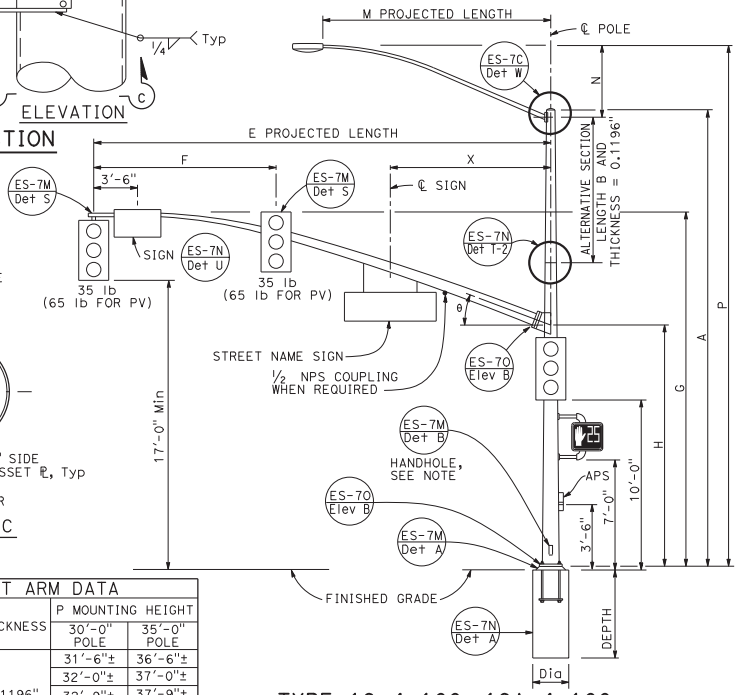

TYPE 19-4-100, 19A-4-100,
24-4-100, 24A-4-100,
26-4-100, 26A-4-100
ELEVATION B

SIGNAL MAST ARM DATA											
E PROJECTED LENGTH	F Min SPACING	G MOUNTING HEIGHT	H	Min OD AT POLE	THICKNESS	I BOLT CIRCLE	HS CAP SCREWS	J PLATE SIZE	K MAST ARM ℄ THICKNESS	L POLE ℄ THICKNESS	θ	X Max
25'-0"	10'-0"	22'-8"±	16'-0"	7⅜"	0.2391"	12"	1¼"-7NC-3"	1'-3"	1¼"	1½"	23°	10'-6"
30'-0"	12'-0"	23'-0"±		8"		13½"			1½"	1¾"	21°	
35'-0"	14'-0"			8⅛"								
40'-0"	15'-0"			9⅜"				1'-5"			15°	13'-0"
45'-0"		23'-8"±		10¼"								

LUMINAIRE MAST ARM DATA						
M PROJECTED LENGTH	N RISE	Min OD AT POLE	THICKNESS	P MOUNTING HEIGHT		
				30'-0" POLE	35'-0" POLE	
6'-0"	2'-0"±	3¼"	0.1196"	31'-6"±	36'-6"±	
8'-0"	2'-6"±	3½"		32'-0"±	37'-0"±	
10'-0"	3'-3"±	3⅞"		32'-9"±	37'-9"±	
12'-0"	4'-3"±			33'-9"±	38'-9"±	
15'-0"	4'-9"±	4¼"		34'-3"±	39'-3"±	

POLE TYPE	LOAD CASE	WIND VELOCITY (mph)	POLE DATA							BASE PLATE DATA				LUMINAIRE MAST ARM	SIGNAL MAST ARM	CIDH PILE FOUNDATION	
			A HEIGHT	Min OD BASE	Min OD TOP	THICKNESS	ALTERNATIVE SECTION B LENGTH	ALTERNATIVE SECTION BOTTOM	ALTERNATIVE SECTION TOP	C	BC = BOLT CIRCLE	THICKNESS	ANCHOR BOLT SIZE			Dia	DEPTH
18-4-100	4	100	17'-0"	16"	13⅝"	0.2391" OR 0.25"				1'-11"	1'-9"	3"	2¼"ø x 42"	NONE	25'-0", 30'-0"	3'-6"	12'-0"
19-4-100			30'-0"		11¼"		10'-0"	13⅛"	11¼"					6'-15' 12'-0"			
19A-4-100			35'-0"		11"		15'-0'	13⅛"	11"					6'-15' 15'-0"			
23-4-100			17'-0"		13⅝"	0.3125"								NONE	35'-0"		
24-4-100			30'-0"		11¾"		10'-0"	15⅛"	13¾"					6'-15' 12'-0"			
24A-4-100			35'-0"		11"		15'-0"	13⅛"	11"					6'-15' 15'-0"			
26-4-100			30'-0"	18"	13¾"		10'-0"	15⅛"	13¾"	2'-1"	1'-11"			6'-15' 12'-0"	40'-0", 45'-0"		13'-0"
26A-4-100			35'-0"		13"		15'-0"	15⅛"	13"					6'-15' 15'-0"			
27-4-100			17'-0"		15⅝"									NONE			

▭ INDICATES MAST ARM LENGTH TO BE USED UNLESS OTHERWISE NOTED ON PLANS.

STATE OF CALIFORNIA
DEPARTMENT OF TRANSPORTATION

ELECTRICAL SYSTEMS (SIGNAL AND LIGHTING STANDARD, CASE 4 SIGNAL MAST ARM LOADING, WIND VELOCITY=100 MPH AND SIGNAL MAST ARM LENGTHS 25' TO 45')

NO SCALE

RSP ES-7F DATED APRIL 17, 2020 SUPERSEDES STANDARD PLAN ES-7F
DATED MAY 31, 2018 - PAGE 520 OF THE STANDARD PLANS BOOK DATED 2018.

REVISED STANDARD PLAN RSP ES-7F

2018 REVISED STANDARD PLAN RSP ES-7F

12-12-19

© 2020 California Department of Transportation
All Rights Reserved

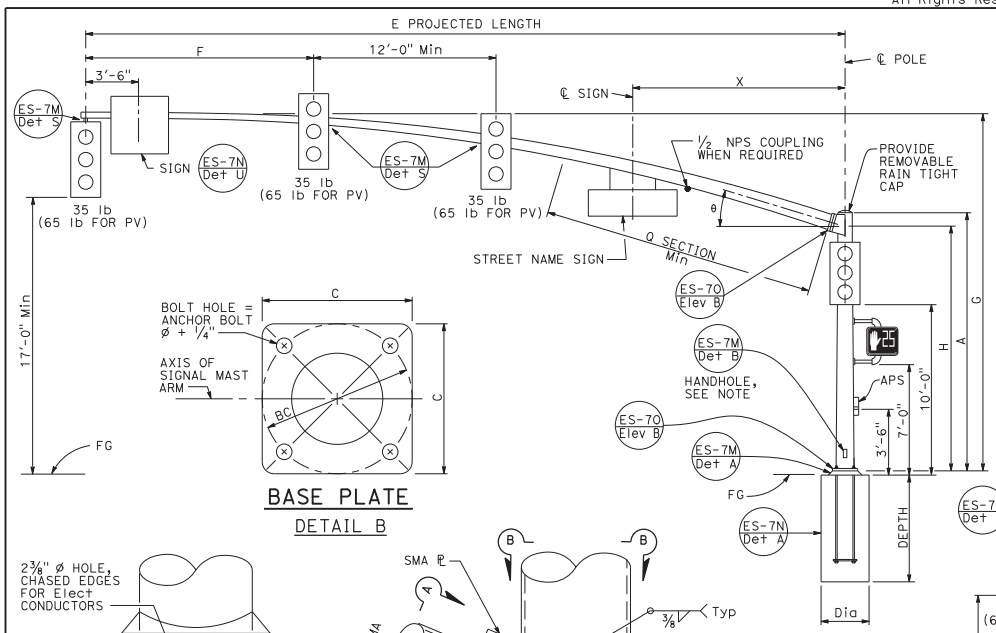

BASE PLATE
DETAIL B

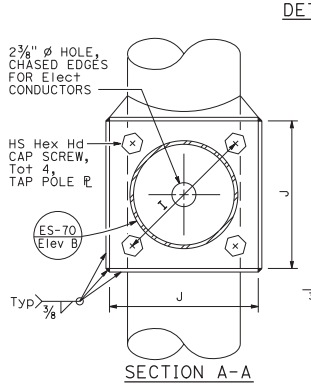

SECTION A-A

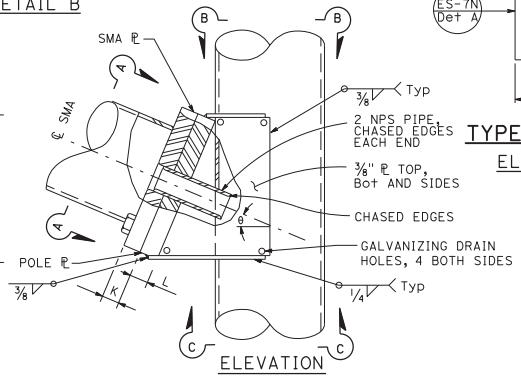

ELEVATION

SIGNAL MAST ARM CONNECTION
DETAIL A

TYPE 28-5-100
ELEVATION A

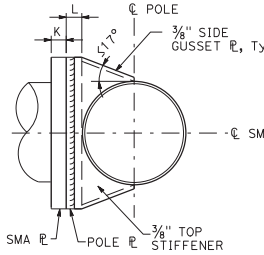

SECTION B-B

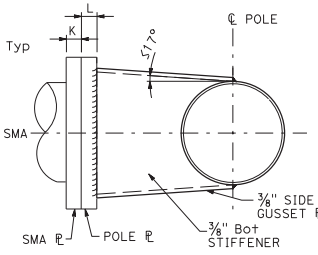

SECTION C-C

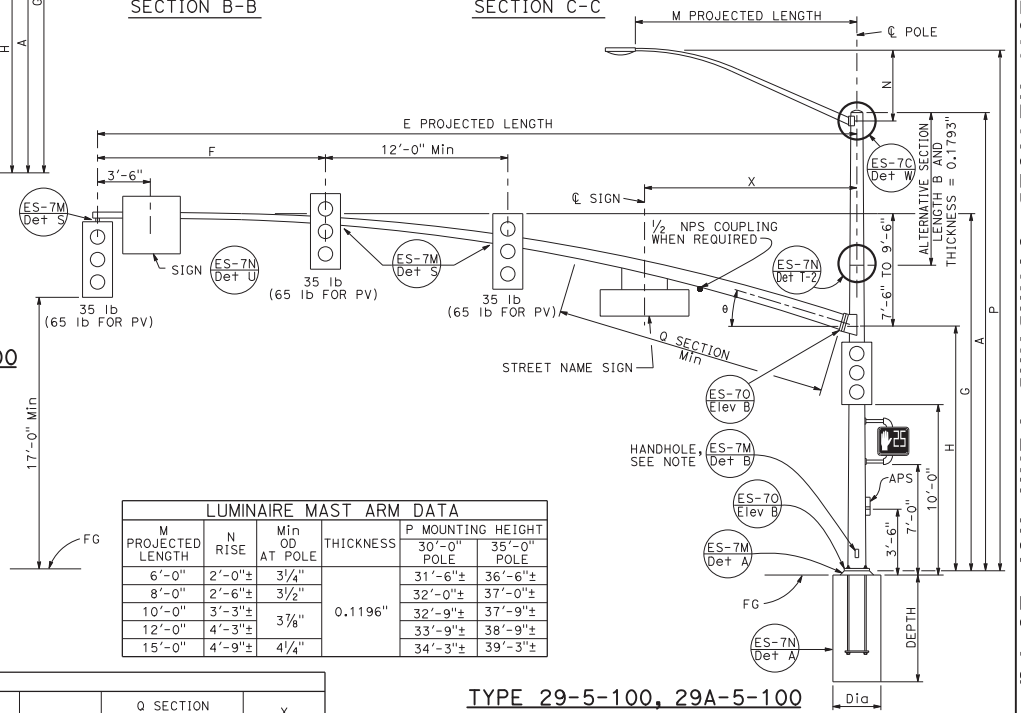

TYPE 29-5-100, 29A-5-100
ELEVATION B

LUMINAIRE MAST ARM DATA

M PROJECTED LENGTH	N RISE	Min OD AT POLE	THICKNESS	P MOUNTING HEIGHT	
				30'-0" POLE	35'-0" POLE
6'-0"	2'-0"±	3¼"	0.1196"	31'-6"±	36'-6"±
8'-0"	2'-6"±	3½"		32'-0"±	37'-0"±
10'-0"	3'-3"±	3⅞"		32'-9"±	37'-9"±
12'-0"	4'-3"±			33'-9"±	38'-9"±
15'-0"	4'-9"±	4¼"		34'-3"±	39'-3"±

SIGNAL MAST ARM DATA

E PROJECTED LENGTH	F Min SPACING	G MOUNTING HEIGHT	H	Min OD AT POLE	THICKNESS	I BOLT CIRCLE	HS CAP SCREWS	J PLATE SIZE	K MAST ARM ℄ THICKNESS	L POLE ℄ THICKNESS	θ	Q SECTION		X Max
												LENGTH	THICKNESS	
50'-0"	15'-0"	23'-7"± TO 25'-7"±	16'-0"	11 7/16"	0.1793"	16"	1½"-6NC-3¼"	1'-9"	1¾"	1¾"	15°	18'-0"	0.2391"	14'-0"
55'-0"				1'-1¼"								23'-0"		

POLE TYPE	LOAD CASE	WIND VELOCITY (mph)	POLE DATA							BASE PLATE DATA				LUMINAIRE MAST ARM	SIGNAL MAST ARM	CIDH PILE FOUNDATION	
			A HEIGHT	Min OD BASE	Min OD TOP	THICKNESS	ALTERNATIVE SECTION B LENGTH	ALTERNATIVE SECTION BOTTOM	ALTERNATIVE SECTION TOP	C	BC = BOLT CIRCLE	THICKNESS	ANCHOR BOLT SIZE			Dia	DEPTH
28-5-100	5	100	17'-0"	22"	19 5/16"	0.375"	10'-0"	1⅞"	17¾"	2'-6"	2'-4"	3"	2¼"ø x 42"	NONE	50'-0", [55'-0"]	4'-0"	14'-0"
29-5-100			30'-0"		17¾"									6'-15' [15'-0"]			
29A-5-100			35'-0"		17"		15'-0"		17"								

[ ] INDICATES MAST ARM LENGTH TO BE USED UNLESS OTHERWISE NOTED ON PLANS.

Dist	COUNTY	ROUTE	POST MILES TOTAL PROJECT	SHEET No.	TOTAL SHEETS

REGISTERED CIVIL ENGINEER
April 17, 2020
PLANS APPROVAL DATE
REGISTERED PROFESSIONAL ENGINEER Stanley P. Johnson No. C57793 Exp. 3-31-22 CIVIL STATE OF CALIFORNIA
THE STATE OF CALIFORNIA OR ITS OFFICERS OR AGENTS SHALL NOT BE RESPONSIBLE FOR THE ACCURACY OR COMPLETENESS OF SCANNED COPIES OF THIS PLAN SHEET.

TO ACCOMPANY PLANS DATED _____

NOTE:
Handhole shall be located on the downstream side of traffic.

STATE OF CALIFORNIA
DEPARTMENT OF TRANSPORTATION

ELECTRICAL SYSTEMS (SIGNAL AND LIGHTING STANDARD, CASE 5 SIGNAL MAST ARM LOADING, WIND VELOCITY=100 MPH AND SIGNAL MAST ARM LENGTHS 50' TO 55')

NO SCALE

RSP ES-7G DATED APRIL 17, 2020 SUPERSEDES STANDARD PLAN ES-7G
DATED MAY 31, 2018 - PAGE 521 OF THE STANDARD PLANS BOOK DATED 2018.

REVISED STANDARD PLAN RSP ES-7G

2018 REVISED STANDARD PLAN RSP ES-7G

12-12-19

© 2020 California Department of Transportation
All Rights Reserved

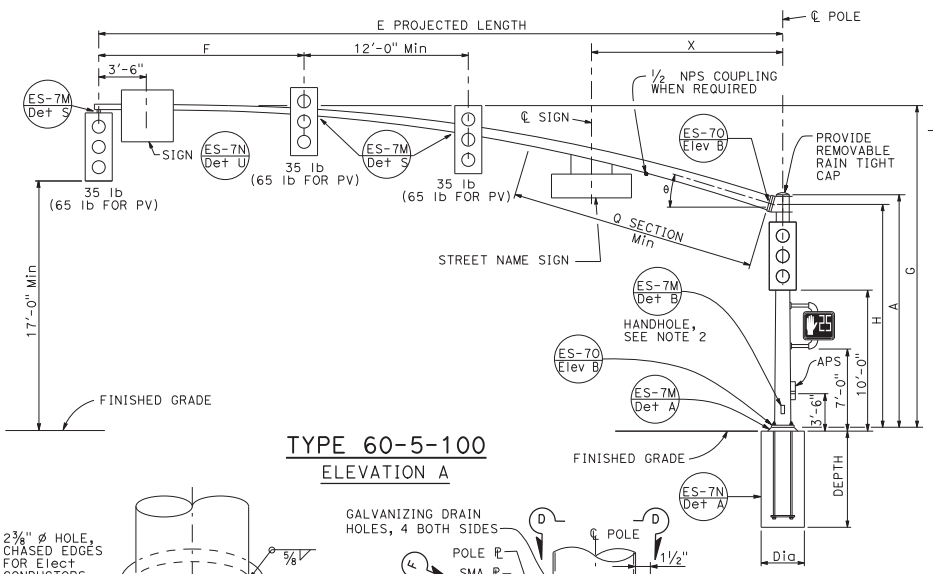

TYPE 60-5-100
ELEVATION A

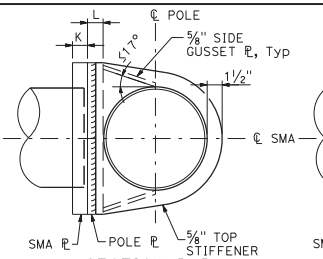

SECTION D-D

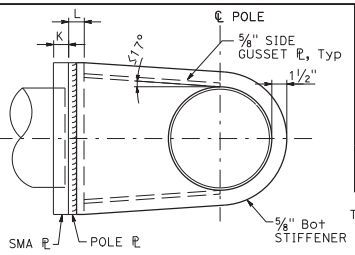

SECTION E-E

Dist	COUNTY	ROUTE	POST MILES TOTAL PROJECT	SHEET No.	TOTAL SHEETS

REGISTERED CIVIL ENGINEER

April 17, 2020
PLANS APPROVAL DATE

Stanley P. Johnson
No. C57793
Exp. 3-31-22
CIVIL
STATE OF CALIFORNIA

THE STATE OF CALIFORNIA OR ITS OFFICERS OR AGENTS SHALL NOT BE RESPONSIBLE FOR THE ACCURACY OR COMPLETENESS OF SCANNED COPIES OF THIS PLAN SHEET.

TO ACCOMPANY PLANS DATED _____

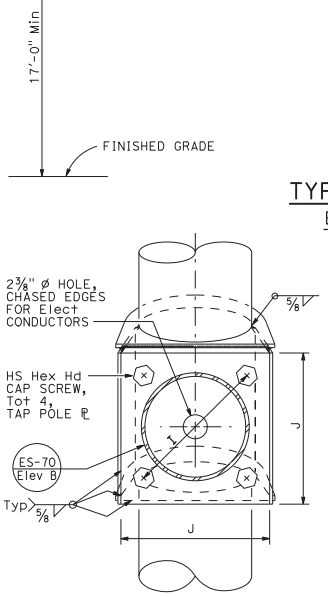

SECTION F-F

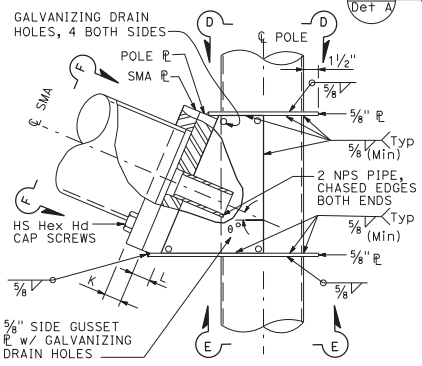

ELEVATION

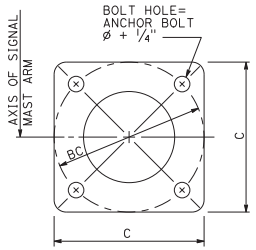

DETAIL B
BASE PLATE

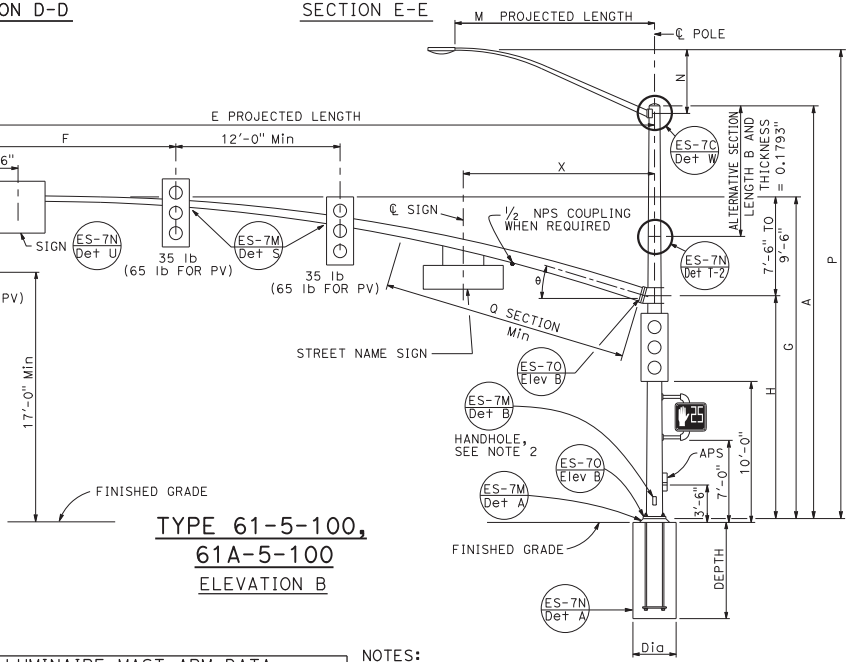

TYPE 61-5-100,
61A-5-100
ELEVATION B

SIGNAL MAST ARM CONNECTION
DETAIL A

SIGNAL MAST ARM DATA

E PROJECTED LENGTH	F Min SPACING	G MOUNTING HEIGHT	H	Min OD AT POLE	THICKNESS	I BOLT CIRCLE	HS CAP SCREWS	J PLATE SIZE	K MAST ARM PL THICKNESS	L POLE PL THICKNESS	θ	Q SECTION LENGTH	Q SECTION THICKNESS	X Max
60'-0"	15'-0"	23'-7" TO 25'-7"	16'-0"	1'-1½"	0.1793"	20"	1½"-6NC-4"	2'-0"	2"	2"	15°	24'-0"	0.2391"	14'-0"
65'-0"					0.2391"							29'-0"	0.3125"	

LUMINAIRE MAST ARM DATA

M PROJECTED LENGTH	N RISE	Min OD AT POLE	THICKNESS	P MOUNTING HEIGHT 30'-0" POLE	P MOUNTING HEIGHT 35'-0" POLE
6'-0"	2'-0"±	3¼"	0.1196"	31'-6"±	36'-6"±
8'-0"	2'-6"±	3½"		32'-0"±	37'-0"±
10'-0"	3'-3"±	3⅞"		32'-9"±	37'-9"±
12'-0"	4'-3"±			33'-9"±	38'-9"±
15'-0"	4'-9"±	4¼"		34'-3"±	39'-3"±

NOTES:
1. The radial separation between the face of the pole and the adjacent insides of the top and bottom gusset plates shall not exceed 3/16". Fillet weld size to be increased by amount of gap.
2. Handhole shall be located on the downstream side of traffic.

POLE TYPE	LOAD CASE	WIND VELOCITY (mph)	POLE DATA A HEIGHT	POLE DATA Min OD BASE	POLE DATA Min OD TOP	POLE DATA THICKNESS	POLE DATA ALTERNATIVE SECTION B LENGTH	POLE DATA ALTERNATIVE SECTION BOTTOM	POLE DATA ALTERNATIVE SECTION TOP	BASE PLATE DATA C	BASE PLATE DATA BC = BOLT CIRCLE	BASE PLATE DATA THICKNESS	BASE PLATE DATA ANCHOR BOLT SIZE	LUMINAIRE MAST ARM	SIGNAL MAST ARM	CIDH PILE FOUNDATION Dia	CIDH PILE FOUNDATION DEPTH
60-5-100	5	100	17'-0"	22"	19⅝"	0.375"	10'-0"	22⅛"	20¾"	2'-6"	2'-4"	3"	2¼"ø x 42"	NONE	60'-0", [65'-0"]	4'-0"	14'-0"
61-5-100			30'-0"	25"	20¾"					2'-11"	2'-9"		3"ø x 60"	6'-15' [15'-0"]		4'-6"	15'-0"
61A-5-100			35'-0"		20"		15'-0"		20"								

[ ] INDICATES MAST ARM LENGTH TO BE USED UNLESS OTHERWISE NOTED ON PLANS.

STATE OF CALIFORNIA
DEPARTMENT OF TRANSPORTATION

ELECTRICAL SYSTEMS (SIGNAL AND LIGHTING STANDARD, CASE 5 SIGNAL MAST ARM LOADING, WIND VELOCITY=100 MPH AND SIGNAL MAST ARM LENGTHS 60' TO 65')

NO SCALE

RSP ES-7H DATED APRIL 17, 2020 SUPERSEDES STANDARD PLAN ES-7H
DATED MAY 31, 2018 - PAGE 522 OF THE STANDARD PLANS BOOK DATED 2018.

REVISED STANDARD PLAN RSP ES-7H

2018 REVISED STANDARD PLAN RSP ES-7H

12-13-19

© 2018 California Department of Transportation
All Rights Reserved

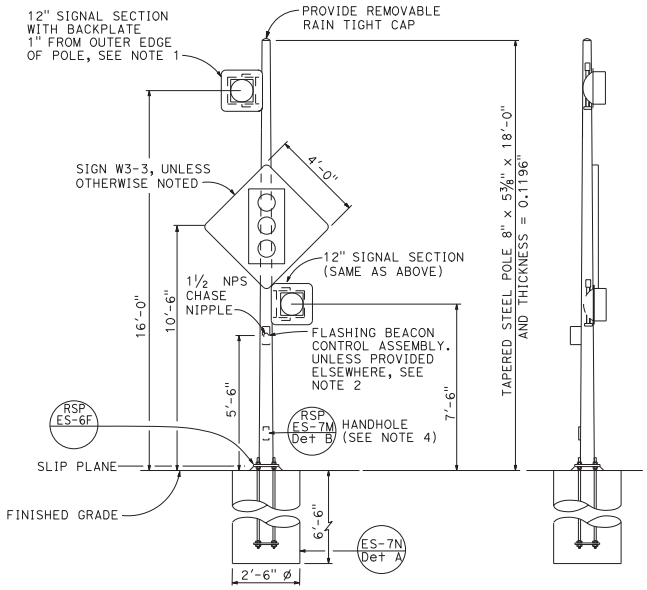

TYPE 15-FBS
FLASHING BEACON WITH SLIP BASE INSTALLATION
DETAIL A

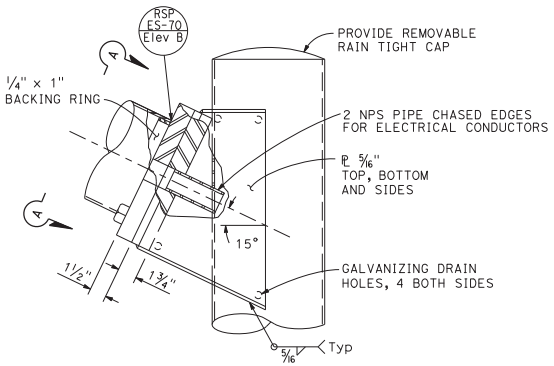

ELEVATION B

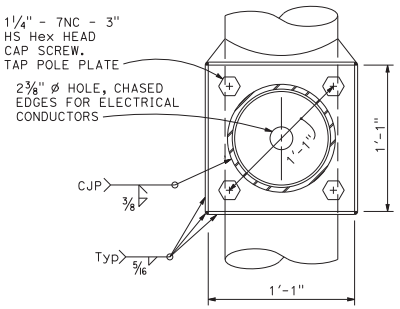

VIEW A-A

FLASHING BEACON MAST ARM CONNECTION DETAIL
DETAIL B

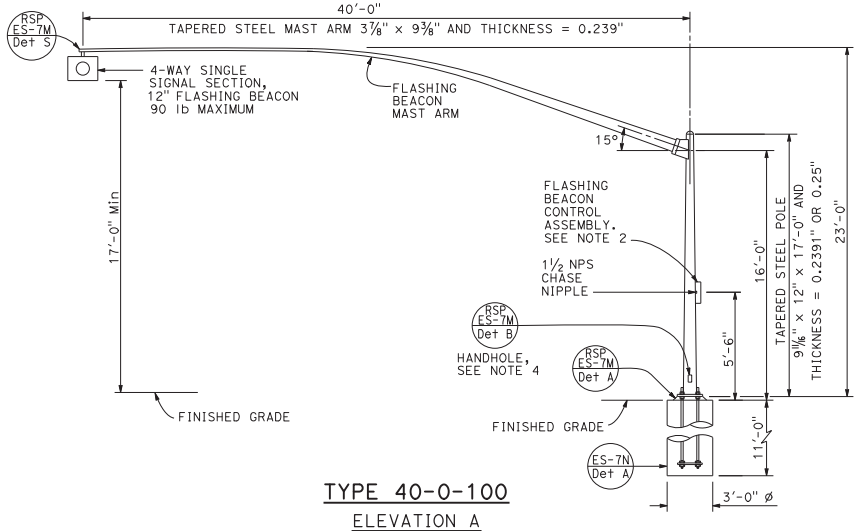

TYPE 40-0-100
ELEVATION A

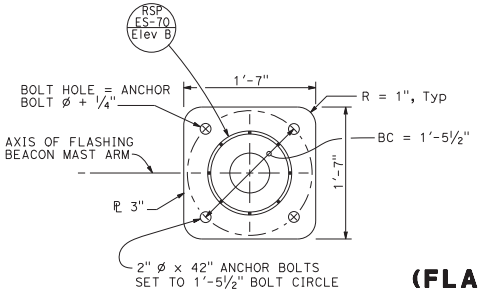

BASE PLATE
DETAIL C

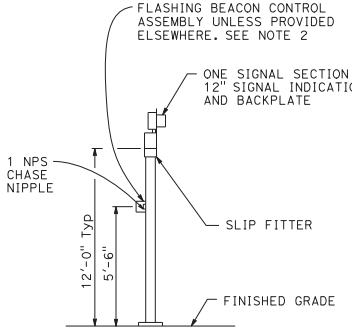

TYPE 1-A, 1-C, AND 1-D
FLASHING BEACON INSTALLATION
DETAIL D
See Note 5

Dist	COUNTY	ROUTE	POST MILES TOTAL PROJECT	SHEET No.	TOTAL SHEETS

REGISTERED CIVIL ENGINEER
October 19, 2018
PLANS APPROVAL DATE
REGISTERED PROFESSIONAL ENGINEER — Stanley P. Johnson — No. C57793 — Exp. 3-31-20 CIVIL — STATE OF CALIFORNIA
THE STATE OF CALIFORNIA OR ITS OFFICERS OR AGENTS SHALL NOT BE RESPONSIBLE FOR THE ACCURACY OR COMPLETENESS OF SCANNED COPIES OF THIS PLAN SHEET.

TO ACCOMPANY PLANS DATED _____

NOTES:

1. See Standard Plan ES-4A and Revised Standard Plan RSP ES-4D for attachment fitting details.
2. For wiring diagram, see Revised Standard Plan RSP ES-14B.
3. For additional notes and details, see Revised Standard Plan RSP ES-7M and Standard Plan ES-7N.
4. Handhole shall be located on the downstream side of traffic.
5. See project plans for type of standard to be installed.

STATE OF CALIFORNIA
DEPARTMENT OF TRANSPORTATION

ELECTRICAL SYSTEMS (FLASHING BEACON ON A TYPE 1, TYPE 15-FBS, AND TYPE 40 STANDARD)

NO SCALE

RSP ES-7J DATED OCTOBER 19, 2018 SUPERSEDES STANDARD PLAN ES-7J DATED MAY 31, 2018 - PAGE 523 OF THE STANDARD PLANS BOOK DATED 2018.

REVISED STANDARD PLAN RSP ES-7J

2018 REVISED STANDARD PLAN RSP ES-7J

6-14-18

© 2018 California Department of Transportation
All Rights Reserved

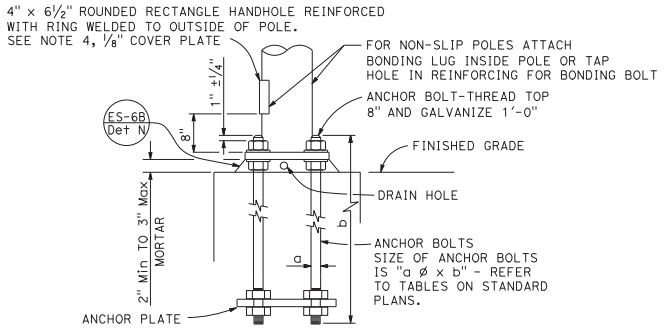

HANDHOLE AND ANCHORAGE
DETAIL A

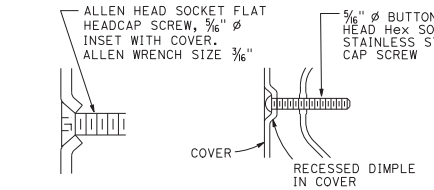

TYPICAL DETAIL
DETAIL B-1

ALTERNATIVE DETAIL
DETAIL B-2

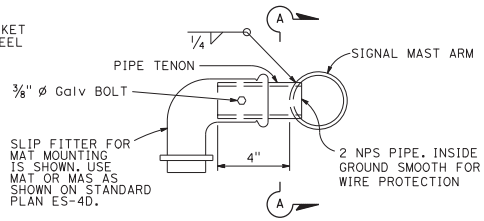

SIDE TENON
DETAIL S-1

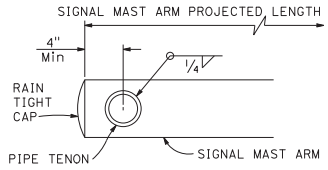

SECTION A-A

WELD SIZE	WALL THICKNESS
⅜"	0.1196"
¼"	0.1793"
5/16"	0.2391"
⅜"	0.3125"
7/16"	0.375"

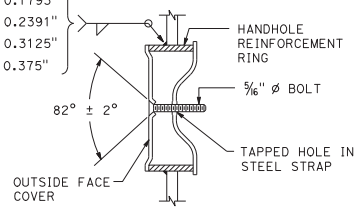

TAMPER RESISTANT HANDHOLE COVER
DETAIL B

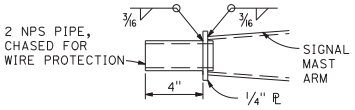

TIP TENON
DETAIL TL
This detail supersedes Detail S when so designated

PIPE TENONS
DETAIL S

WELD SIZE	WALL THICKNESS
⅛"	0.1196"
⅜"	0.1793"
¼"	0.2391"

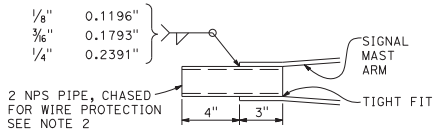

TIP TENON
DETAIL TS

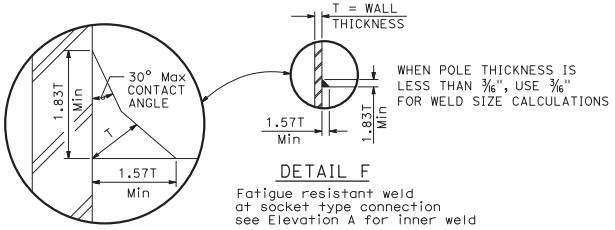

DETAIL F
Fatigue resistant weld at socket type connection see Elevation A for inner weld

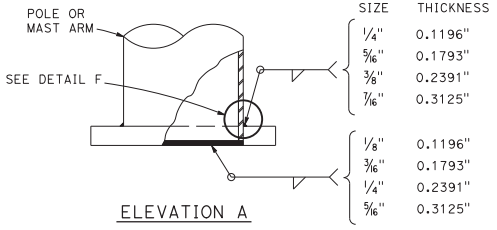

WELD SIZE	WALL THICKNESS
¼"	0.1196"
5/16"	0.1793"
⅜"	0.2391"
7/16"	0.3125"

⅛"	0.1196"
3/16"	0.1793"
¼"	0.2391"
5/16"	0.3125"

ELEVATION A

IDENTIFICATION NUMBER

1. Attach a stamped metal tag with pole's identification number above the handhole. ¼" high number, minimum.
2. Attach a stamped metal tag with mast arm's identification number to the bottom of the signal mast arm near the pole plate. ¼" high number, minimum.

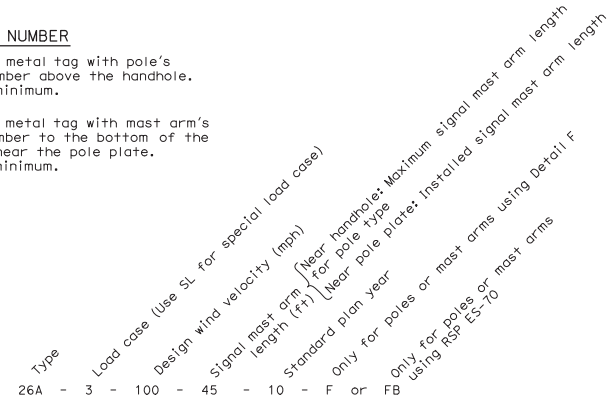

SAMPLE IDENTIFICATION NUMBER

NOTES:

1. Provide a Hex nut, leveling nut and 2 washers for each bolt.
2. Luminaire mast arms shall be round, tapered steel tubes, taper of 0.1375" to 0.143-inch per foot with an end section 2⅜" OD for mounting hardware. Extensions of 2 NPS Standard pipe and 7" long may be used at the option of the manufacturer. When low pressure sodium luminaires are required, the extension shall be 1'-3".
3. Signal mast arms shall be round, tapered steel tubes, maximum taper 0.143-inch per foot.
4. Handhole reinforcement ring shall be ¼" x 2" for 0.1196" to 0.2391" thick poles, ⅜" x 2" for 0.3125" to 0.375" thick poles.
5. Handholes shall be located on the downstream side of traffic.
6. Detail F, fatigue resistant weld, is required at socket welded signal mast arm plate and pole base plate.
7. Cap screws shall be tightened by the turn-of-nut method ⅓ turn from a snug tight condition. No washer will be required.
8. Outside diameter, wall thickness, and corresponding section properties of poles and mast arms as shown in the Standard Plans are minimums. Unless otherwise specified, alternative sections shall require approval by the Engineer.
9. Design: AASHTO Standard Specifications for Structural Support for Highway Signs, Luminaires, and Traffic Signals, 6th Edition. Basic Wind Speed = 100 mph (3 seconds gust). Yearly Mean Wind Velocity = 15.6 mph.
10. Materials (Structural steel):
    fy = 55,000 psi (tapered steel tube and anchor bolts)
    fy = 50,000 psi (unless otherwise noted)
11. Materials (Reinforced concrete):
    f'c = 3,625 psi
    fy = 60,000 psi

Dist	COUNTY	ROUTE	POST MILES TOTAL PROJECT	SHEET No.	TOTAL SHEETS

REGISTERED CIVIL ENGINEER
October 19, 2018
PLANS APPROVAL DATE
THE STATE OF CALIFORNIA OR ITS OFFICERS OR AGENTS SHALL NOT BE RESPONSIBLE FOR THE ACCURACY OR COMPLETENESS OF SCANNED COPIES OF THIS PLAN SHEET.

REGISTERED PROFESSIONAL ENGINEER
Stanley P. Johnson
No. C57793
Exp. 3-31-20
CIVIL
STATE OF CALIFORNIA

TO ACCOMPANY PLANS DATED _____

STATE OF CALIFORNIA
DEPARTMENT OF TRANSPORTATION

ELECTRICAL SYSTEMS (SIGNAL AND LIGHTING STANDARD, DETAIL No. 1)

NO SCALE

RSP ES-7M DATED OCTOBER 19, 2018 SUPERSEDES STANDARD PLAN ES-7M DATED MAY 31, 2018 - PAGE 526 OF THE STANDARD PLANS BOOK DATED 2018.

REVISED STANDARD PLAN RSP ES-7M

2018 REVISED STANDARD PLAN RSP ES-7M

5-31-18

© 2018 California Department of Transportation
All Rights Reserved

Dist	COUNTY	ROUTE	POST MILES TOTAL PROJECT	SHEET No.	TOTAL SHEETS

REGISTERED CIVIL ENGINEER

October 19, 2018
PLANS APPROVAL DATE

REGISTERED PROFESSIONAL ENGINEER
Stanley P. Johnson
No. C57793
Exp. 3-31-20
CIVIL
STATE OF CALIFORNIA

THE STATE OF CALIFORNIA OR ITS OFFICERS OR AGENTS SHALL NOT BE RESPONSIBLE FOR THE ACCURACY OR COMPLETENESS OF SCANNED COPIES OF THIS PLAN SHEET.

TO ACCOMPANY PLANS DATED _____

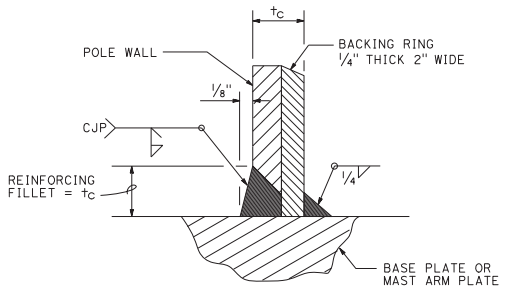

DETAIL B

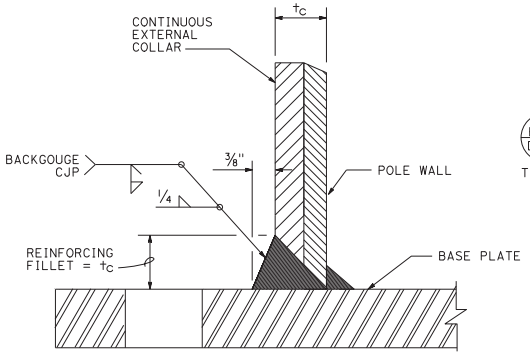

DETAIL C1

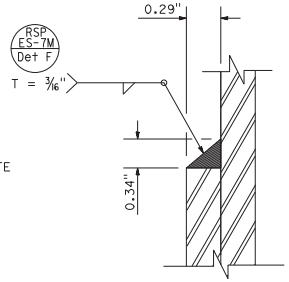

DETAIL C2

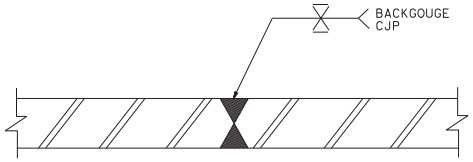

DETAIL C3

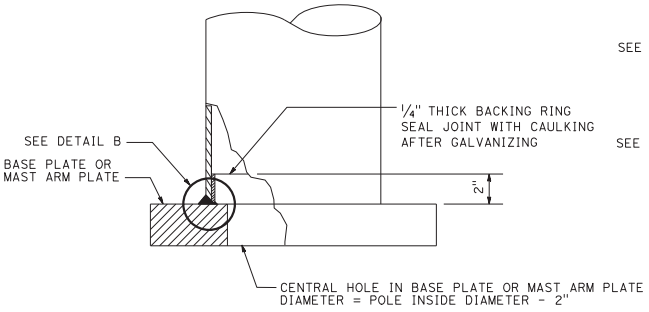

ELEVATION B

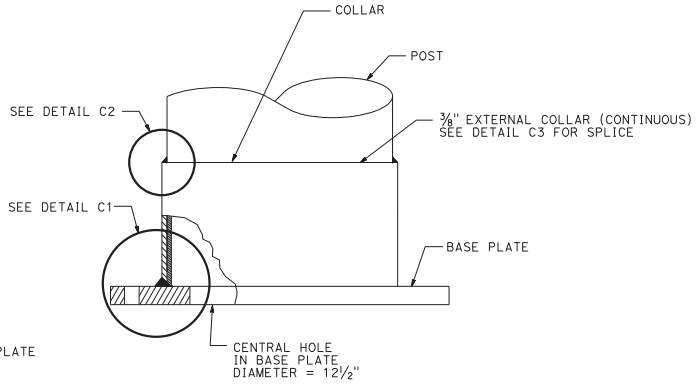

ELEVATION C

For alternative base, see Detail C4

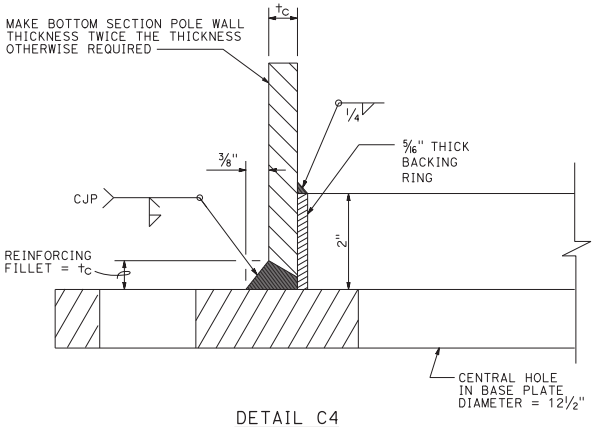

DETAIL C4

STATE OF CALIFORNIA
DEPARTMENT OF TRANSPORTATION

ELECTRICAL SYSTEMS (SIGNAL AND LIGHTING STANDARD, DETAIL No. 3)

NO SCALE

RSP ES-7O DATED OCTOBER 19, 2018 SUPERSEDES STANDARD PLAN ES-7O DATED MAY 31, 2018 - PAGE 528 OF THE STANDARD PLANS BOOK DATED 2018.

REVISED STANDARD PLAN RSP ES-7O

2018 REVISED STANDARD PLAN RSP ES-7O

5-16-18

© 2019 California Department of Transportation
All Rights Reserved

Dist	COUNTY	ROUTE	POST MILES TOTAL PROJECT	SHEET No.	TOTAL SHEETS

H.R.J.
REGISTERED ELECTRICAL ENGINEER

Hamid Zolfaghari
No. E15636
Exp. 12-31-19
ELECTRICAL
REGISTERED PROFESSIONAL ENGINEER
STATE OF CALIFORNIA

October 18, 2019
PLANS APPROVAL DATE

THE STATE OF CALIFORNIA OR ITS OFFICERS OR AGENTS SHALL NOT BE RESPONSIBLE FOR THE ACCURACY OR COMPLETENESS OF SCANNED COPIES OF THIS PLAN SHEET.

TO ACCOMPANY PLANS DATED _____

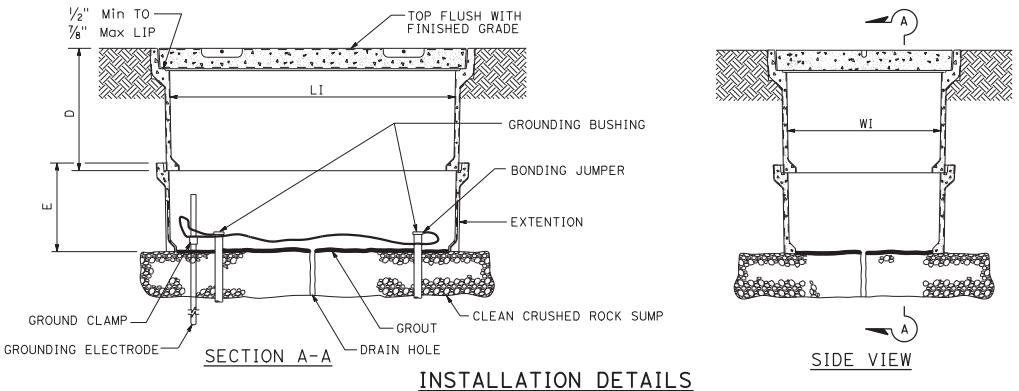

SECTION A-A

SIDE VIEW

INSTALLATION DETAILS

DETAIL A

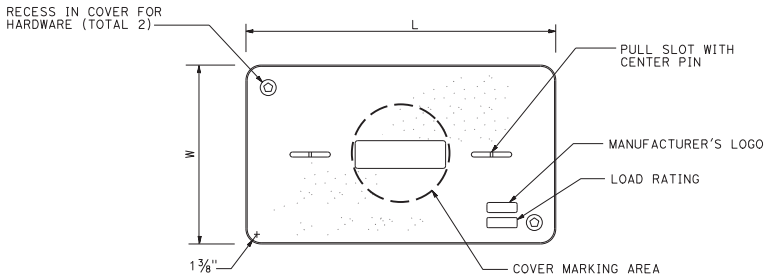

COVER TOP VIEW

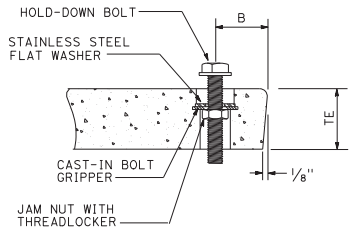

TYPICAL COVER CAPTIVE BOLT
OR SIMILAR

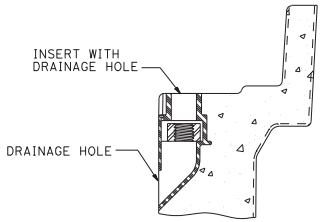

TYPICAL THREADED INSERT
OR SIMILAR

NOMINAL DIMENSIONS TABLE

PULL BOX						COVER				
PULL BOX TYPE	MINIMUM DEPTH BOX (D)	MINIMUM DEPTH EXTENSION (E)	MAXIMUM WEIGHT	LI Min	WI Min	TE	B	L	W	MAXIMUM WEIGHT
No. 3½	12"	N/A	40 lb	1'-2⅜"	9"	1⅝"-1¾"	1¾"	1'-3¼" - 1'-3⅜"	10" - 10⅛"	30 lb
No. 5	12"	10"	65 lb	1' - 8"	11"	2"	1¾"	1'-11¼"	1'-1¾"	60 lb
No. 6	12"	10"	70 lb	2' - 4¼"	1' - 3¼"	2"	2"	2'-6½"	1'-5½"	95 lb

STATE OF CALIFORNIA
DEPARTMENT OF TRANSPORTATION

ELECTRICAL SYSTEMS (NON-TRAFFIC PULL BOX)

NO SCALE

RSP ES-8A DATED OCTOBER 18, 2019 SUPERSEDES STANDARD PLAN ES-8A
DATED MAY 31, 2018 - PAGE 532 OF THE STANDARD PLANS BOOK DATED 2018.

REVISED STANDARD PLAN RSP ES-8A

2018 REVISED STANDARD PLAN RSP ES-8A

7-17-19

© 2019 California Department of Transportation
All Rights Reserved

Dist	COUNTY	ROUTE	POST MILES TOTAL PROJECT	SHEET No.	TOTAL SHEETS

H.R.J
REGISTERED ELECTRICAL ENGINEER

Hamid Zolfaghari
No. E15636
Exp. 12-31-19
ELECTRICAL
REGISTERED PROFESSIONAL ENGINEER
STATE OF CALIFORNIA

October 18, 2019
PLANS APPROVAL DATE

THE STATE OF CALIFORNIA OR ITS OFFICERS OR AGENTS SHALL NOT BE RESPONSIBLE FOR THE ACCURACY OR COMPLETENESS OF SCANNED COPIES OF THIS PLAN SHEET.

TO ACCOMPANY PLANS DATED _____

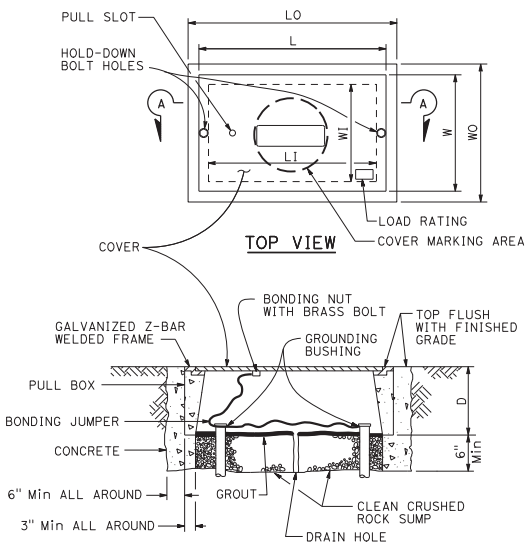

SECTION A-A

No. 3½(T), No. 5(T), AND No. 6(T) TRAFFIC PULL BOX

NOMINAL DIMENSIONS TABLE								
PULL BOX							COVER	
PULL BOX TYPE	MINIMUM THICKNESS	MINIMUM DEPTH D	LO	LI	WO	WI	L	W
No. 3½(T)	1½"	1'-0"	1'-10" - 1'-11"	1'-5" - 1'-6½"	1'-3" - 1'-4"	10" - 1'-0"	1'-8" - 1'-8½"	1'-1" - 1'-2"
No. 5(T)	1¾"	1'-0"	2'-5" - 2'-6"	2'-0" - 2'-1"	1'-6" - 1'-7"	1'-1" - 1'-2"	2'-3" - 2'-3½"	1'-4" - 1'-4½"
No. 6(T)	2"	1'-0"	2'-11" - 3'-1"	2'-6" - 2'-7"	1'-10" - 2'-0"	1'-5" - 1'-6"	2'-9" - 2'-9½"	1'-8" - 1'-8½"

STATE OF CALIFORNIA
DEPARTMENT OF TRANSPORTATION

ELECTRICAL SYSTEMS (TRAFFIC PULL BOX)

NO SCALE

RSP ES-8B DATED OCTOBER 18, 2019 SUPERSEDES STANDARD PLAN ES-8B
DATED MAY 31, 2018 - PAGE 533 OF THE STANDARD PLANS BOOK DATED 2018.

REVISED STANDARD PLAN RSP ES-8B

2018 REVISED STANDARD PLAN RSP ES-8B

6-17-19

© 2020 California Department of Transportation
All Rights Reserved

Dist	COUNTY	ROUTE	POST MILES TOTAL PROJECT	SHEET No.	TOTAL SHEETS

REGISTERED ELECTRICAL ENGINEER

October 16, 2020
PLANS APPROVAL DATE

REGISTERED PROFESSIONAL ENGINEER
John L. Castro
No. E17490
Exp. 6-30-21
ELECTRICAL
STATE OF CALIFORNIA

THE STATE OF CALIFORNIA OR ITS OFFICERS OR AGENTS SHALL NOT BE RESPONSIBLE FOR THE ACCURACY OR COMPLETENESS OF SCANNED COPIES OF THIS PLAN SHEET.

TO ACCOMPANY PLANS DATED _____

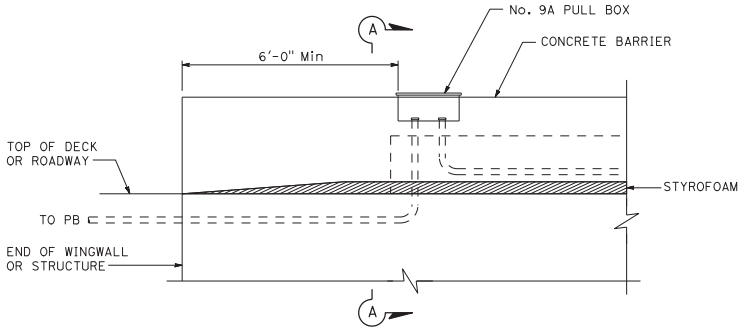

SIDE VIEW

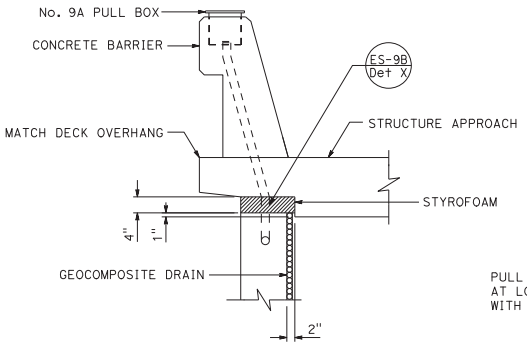

SECTION A-A

CONDUIT TERMINATION

DETAIL A

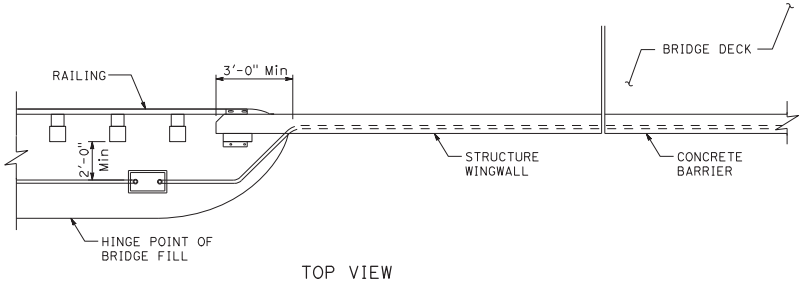

TOP VIEW

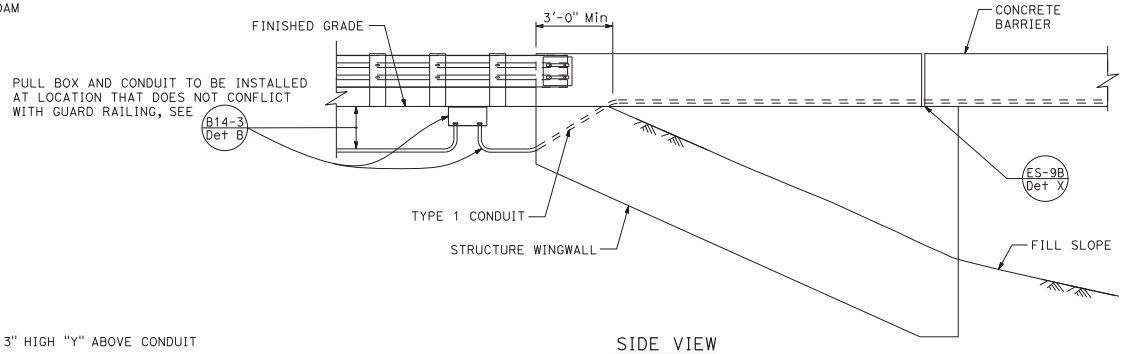

SIDE VIEW

CONDUIT TERMINATION

DETAIL I

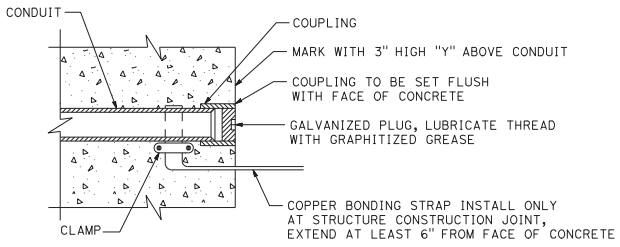

CONDUIT TERMINATION

DETAIL C

STATE OF CALIFORNIA
DEPARTMENT OF TRANSPORTATION

ELECTRICAL SYSTEMS
(STRUCTURE PULL BOX INSTALLATIONS)

NO SCALE

RSP ES-9A DATED OCTOBER 16, 2020 SUPERSEDES STANDARD PLAN ES-9A
DATED MAY 31, 2018 - PAGE 535 OF THE STANDARD PLANS BOOK DATED 2018.

REVISED STANDARD PLAN RSP ES-9A

2018 REVISED STANDARD PLAN RSP ES-9A

6-16-20

© 2020 California Department of Transportation
All Rights Reserved

Dist	COUNTY	ROUTE	POST MILES TOTAL PROJECT	SHEET No.	TOTAL SHEETS

REGISTERED ELECTRICAL ENGINEER

October 16, 2020
PLANS APPROVAL DATE

REGISTERED PROFESSIONAL ENGINEER
John L. Castro
No. E17490
Exp. 6-30-21
ELECTRICAL
STATE OF CALIFORNIA

THE STATE OF CALIFORNIA OR ITS OFFICERS OR AGENTS SHALL NOT BE RESPONSIBLE FOR THE ACCURACY OR COMPLETENESS OF SCANNED COPIES OF THIS PLAN SHEET.

TO ACCOMPANY PLANS DATED _____

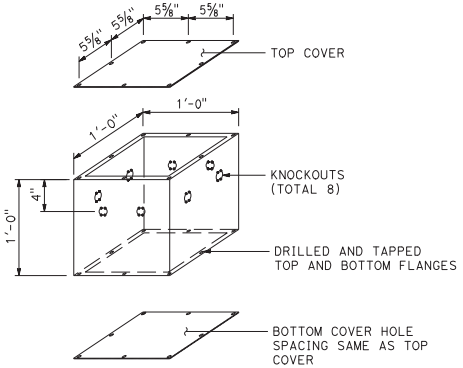

No. 7 PULL BOX

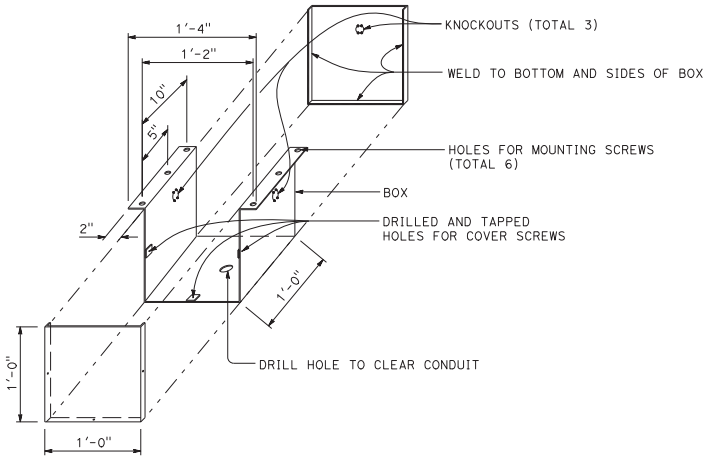

No. 8 PULL BOX

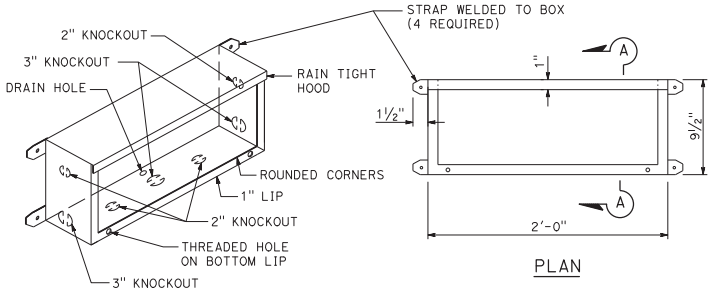

No. 9 PULL BOX

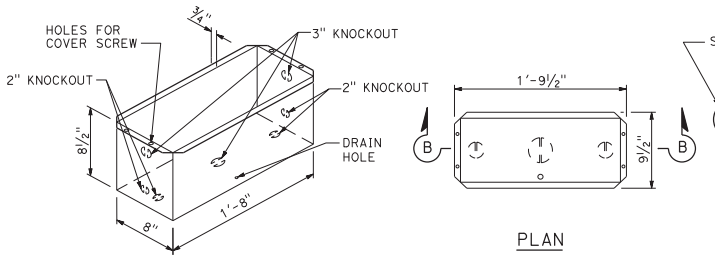

No. 9A PULL BOX

STATE OF CALIFORNIA
DEPARTMENT OF TRANSPORTATION

ELECTRICAL SYSTEMS (STRUCTURE PULL BOX)

NO SCALE

RSP ES-9C DATED OCTOBER 16, 2020 SUPERSEDES RSP ES-9C DATED OCTOBER 18, 2019 AND STANDARD PLAN ES-9C DATED MAY 31, 2018 - PAGE 537 OF THE STANDARD PLANS BOOK DATED 2018.

REVISED STANDARD PLAN RSP ES-9C

2018 REVISED STANDARD PLAN RSP ES-9C

6-18-20

© 2019 California Department of Transportation
All Rights Reserved

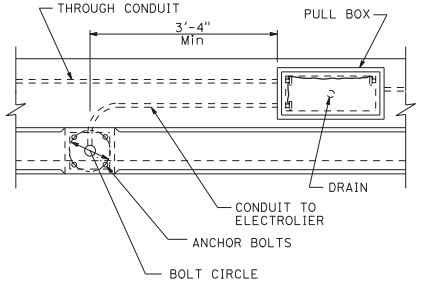

TOP VIEW

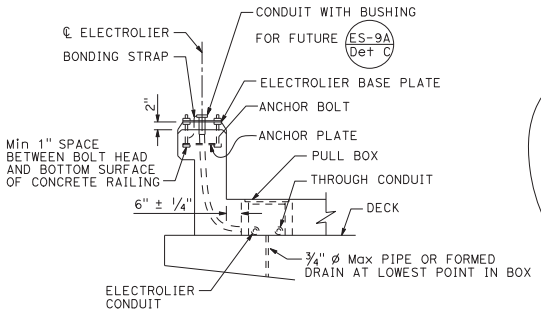

END VIEW

No. 3½, 5, OR 6 PULL BOX INSTALLATION

DETAIL A

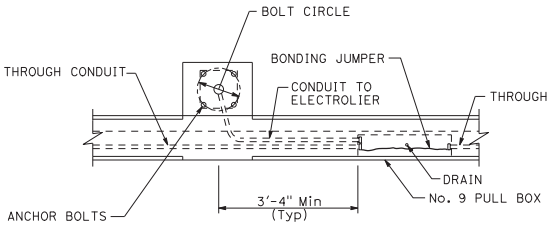

TOP VIEW

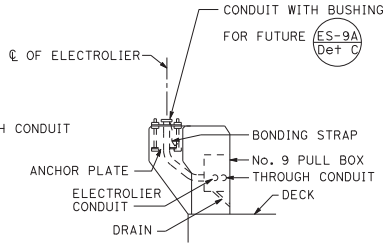

END VIEW

No. 9 PULL BOX INSTALLATION

DETAIL B

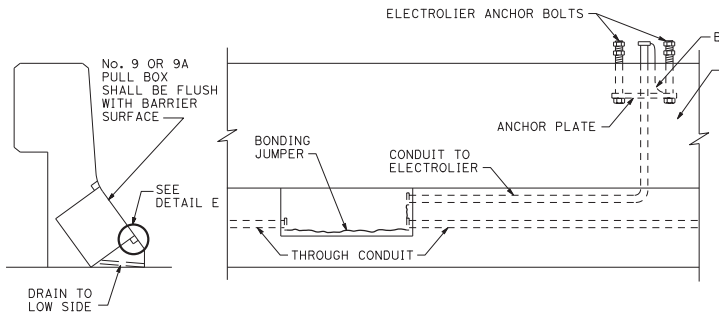

INSTALLATION IN SLOPING PARAPETS

DETAIL D

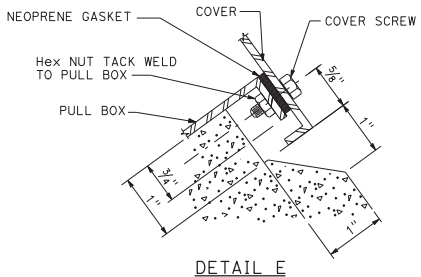

DETAIL E

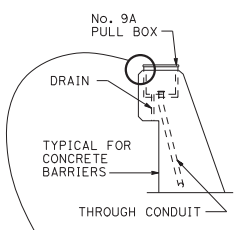

END VIEW

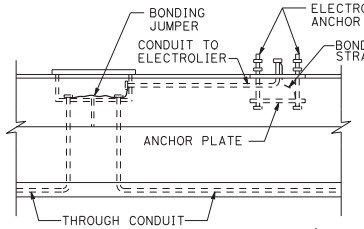

SIDE VIEW

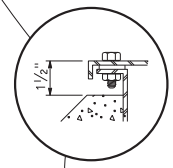

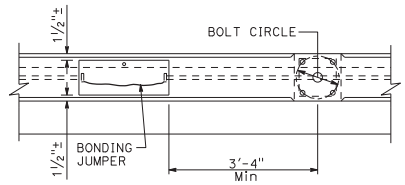

TOP VIEW

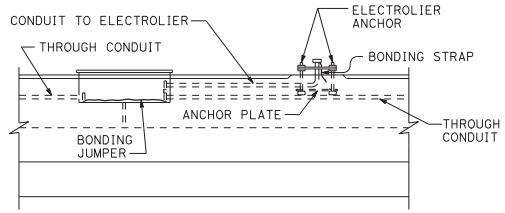

SIDE VIEW

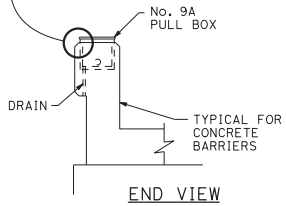

END VIEW

No. 9A PULL BOX INSTALLATION

DETAIL C

Dist	COUNTY	ROUTE	POST MILES TOTAL PROJECT	SHEET No.	TOTAL SHEETS

H.R.
REGISTERED ELECTRICAL ENGINEER

Hamid Zolfaghari
No. E15636
Exp. 12-31-19
ELECTRICAL
REGISTERED PROFESSIONAL ENGINEER
STATE OF CALIFORNIA

October 18, 2019
PLANS APPROVAL DATE

THE STATE OF CALIFORNIA OR ITS OFFICERS OR AGENTS SHALL NOT BE RESPONSIBLE FOR THE ACCURACY OR COMPLETENESS OF SCANNED COPIES OF THIS PLAN SHEET.

TO ACCOMPANY PLANS DATED _____

2018 REVISED STANDARD PLAN RSP ES-9D

STATE OF CALIFORNIA
DEPARTMENT OF TRANSPORTATION

ELECTRICAL SYSTEMS (STRUCTURE PULL BOX INSTALLATIONS)

NO SCALE

RSP ES-9D DATED OCTOBER 18, 2019 SUPERSEDES RSP ES-9D DATED OCTOBER 19, 2018 AND STANDARD PLAN ES-9D DATED MAY 31, 2018 - PAGE 538 OF THE STANDARD PLANS BOOK DATED 2018.

REVISED STANDARD PLAN RSP ES-9D

8-23-19

© 2020 California Department of Transportation
All Rights Reserved

Dist	COUNTY	ROUTE	POST MILES TOTAL PROJECT	SHEET No.	TOTAL SHEETS

REGISTERED ELECTRICAL ENGINEER

October 16, 2020
PLANS APPROVAL DATE

REGISTERED PROFESSIONAL ENGINEER
John L. Castro
No. E17490
Exp. 6-30-21
ELECTRICAL
STATE OF CALIFORNIA

THE STATE OF CALIFORNIA OR ITS OFFICERS OR AGENTS SHALL NOT BE RESPONSIBLE FOR THE ACCURACY OR COMPLETENESS OF SCANNED COPIES OF THIS PLAN SHEET.

TO ACCOMPANY PLANS DATED _____

NOTE:
Curves represent the minimum maintained illuminance (FC).

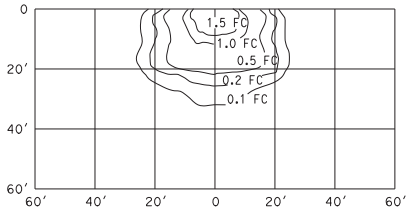

WALL-MOUNTED
15′ Mounting Height
ANSI Designation S62
Lamp operated at 5,800 lm
70 W (Max)

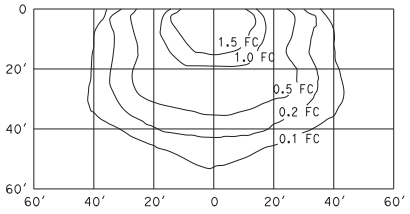

WALL-MOUNTED
15′ Mounting Height
ANSI Designation S54
Lamp operated at 9,500 lm
100 W (Max)

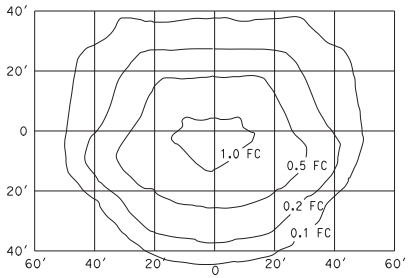

FLUSH-MOUNTED SOFFIT
17′ Mounting Height
ANSI Designation S62
Lamp operated at 5,800 lm
70 W (Max)

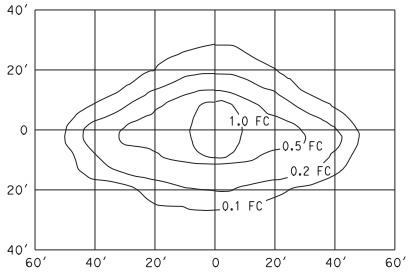

PENDANT SOFFIT
TYPE III SHORT
17′ Mounting Height
ANSI Designation S62
Lamp operated at 5,800 lm
70 W (Max)

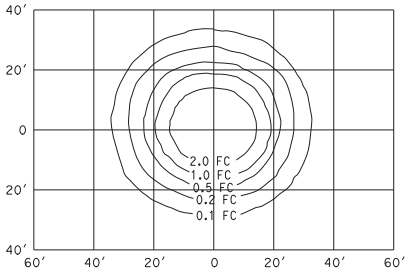

PENDANT SOFFIT
17′ Mounting Height
ANSI Designation S62
Lamp operated at 5,800 lm
70 W (Max)

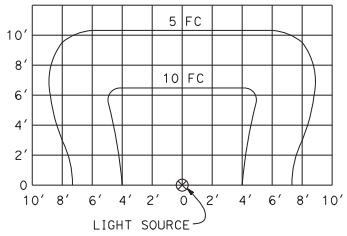

OVERHEAD SIGN LUMINAIRE
60 W (Max)

STATE OF CALIFORNIA
DEPARTMENT OF TRANSPORTATION

ELECTRICAL SYSTEMS (ISOFOOTCANDLE CURVES)

NO SCALE

RSP ES-10B DATED OCTOBER 16, 2020 SUPERSEDES RSP ES-10B DATED APRIL 19, 2019 AND RSP ES-10B DATED OCTOBER 19, 2018 AND STANDARD PLAN ES-10B DATED MAY 31, 2018 - PAGE 542 OF THE STANDARD PLANS BOOK DATED 2018.

REVISED STANDARD PLAN RSP ES-10B

2018 REVISED STANDARD PLAN RSP ES-10B

6-11-20

© 2018 California Department of Transportation
All Rights Reserved

Dist	COUNTY	ROUTE	POST MILES TOTAL PROJECT	SHEET No.	TOTAL SHEETS

H.R.J
REGISTERED ELECTRICAL ENGINEER

October 19, 2018
PLANS APPROVAL DATE

REGISTERED PROFESSIONAL ENGINEER
Hamid Zolfaghari
No. E15636
Exp. 12-31-19
ELECTRICAL
STATE OF CALIFORNIA

THE STATE OF CALIFORNIA OR ITS OFFICERS OR AGENTS SHALL NOT BE RESPONSIBLE FOR THE ACCURACY OR COMPLETENESS OF SCANNED COPIES OF THIS PLAN SHEET.

TO ACCOMPANY PLANS DATED _____

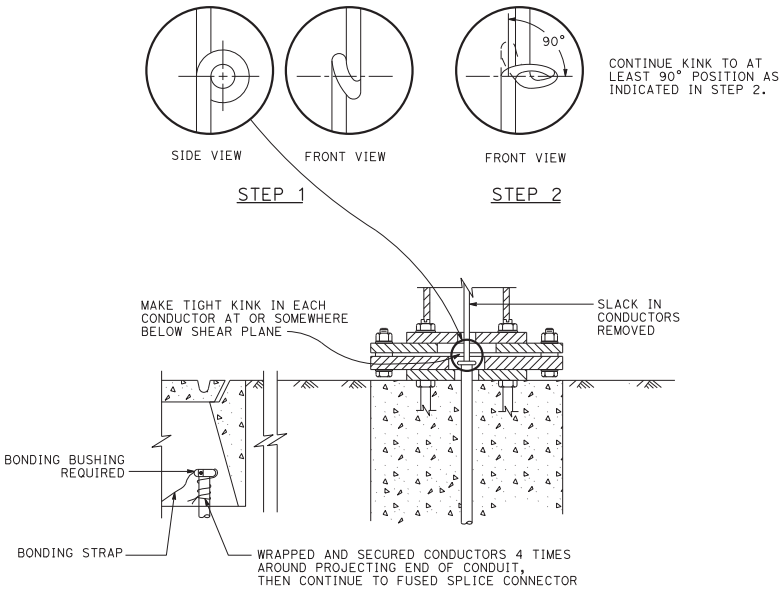

KINKING DETAIL FOR SLIP BASE STANDARDS

DETAIL A

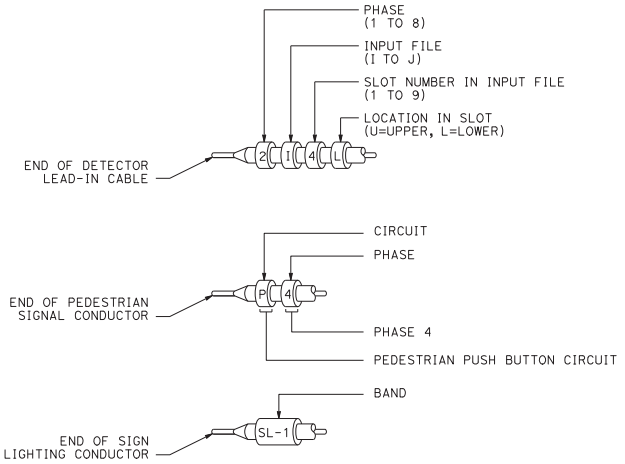

TYPICAL BANDING DETAILS

DETAIL B

STATE OF CALIFORNIA
DEPARTMENT OF TRANSPORTATION

ELECTRICAL SYSTEMS (KINKING AND BANDING DETAIL)

NO SCALE

RSP ES-13B DATED OCTOBER 19, 2018 SUPERSEDES STANDARD PLAN ES-13B DATED MAY 31, 2018 - PAGE 545 OF THE STANDARD PLANS BOOK DATED 2018.

REVISED STANDARD PLAN RSP ES-13B

2018 REVISED STANDARD PLAN RSP ES-13B

5-29-18

© 2018 California Department of Transportation
All Rights Reserved

LENGTH OF SIGN PANEL	NUMBER OF OVERHEAD SIGN LUMINAIRE (EACH)	OVERHEAD SIGN LUMINAIRE SPACING SEE NOTES
5'-0"	1	2'-6"
6'-0"		3'-0"
7'-0"		3'-6"
8'-0"		4'-0"
9'-0"		4'-6"
10'-0"		5'-0"
11'-0"		5'-6"
12'-0"		6'-0"
13'-0"		6'-6"
14'-0"		7'-0"
15'-0"		7'-6"
16'-0"		8'-0"
17'-0"	2	4'-3":8'-6"
18'-0"		4'-6":9'-0"
19'-0"		4'-9":9'-6"
20'-0"		5'-0":10'-0"
21'-0"		5'-3":10'-6"
22'-0"		5'-6":11'-0"
23'-0"		5'-9":11'-6"
24'-0"		6'-0":12'-0"
25'-0"		6'-3":12'-6"
26'-0"		6'-6":13'-0"
27'-0"		6'-9":13'-6"
28'-0"		7'-0":14'-0"
29'-0"		7'-3":14'-6"
30'-0"		7'-6":15'-0"
31'-0"		7'-9":15'-6"
32'-0"		8'-0":16'-0"
33'-0"	3	5'-6":11'-0"
34'-0"		5'-8":11'-4"
35'-0"		5'-10":11'-8"
36'-0"		6'-0":12'-0"
37'-0"		6'-2":12'-4"
38'-0"		6'-4":12'-8"
39'-0"		6'-6":13'-0"
40'-0"		6'-8":13'-4"
41'-0"		6'-10":13'-8"
42'-0"		7'-0":14'-0"
43'-0"		7'-2":14'-4"
44'-0"		7'-4":14'-8"
45'-0"		7'-6":15'-0"
46'-0"		7'-8":15'-4"
47'-0"		7'-10":15'-8"
48'-0"		8'-0"-16'-0"
49'-0"	4	6'-1½":12'-3"
50'-0"		6'-3":12'-6"
51'-0"		6'-4½":12'-9"
52'-0"		6'-6":13'-0"
53'-0"		6'-7½":13'-3"
54'-0"		6'-9":13'-6"
55'-0"		6'-10½":13'-9"
56'-0"		7'-0":14'-0"
57'-0"		7'-1½":14'-3"
58'-0"		7'-3":14'-6"
59'-0"		7'-4½":14'-9"
60'-0"		7'-6":15'-0"
61'-0"		7'-7½":15'-3"
62'-0"		7'-9":15'-6"
63'-0"		7'-10½":15'-9"
64'-0"		8'-0":16'-0"

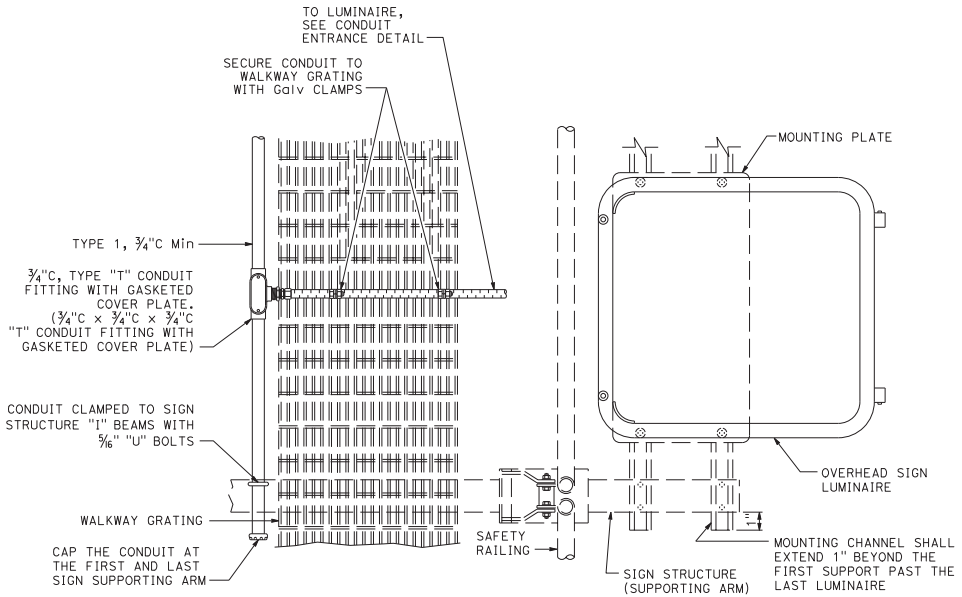

TOP VIEW

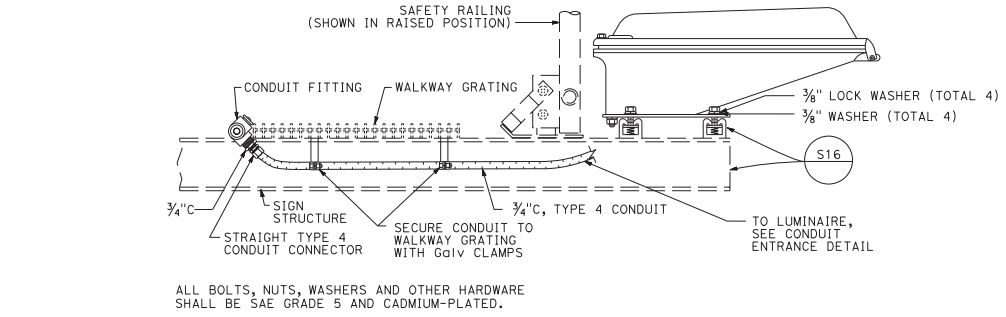

ALL BOLTS, NUTS, WASHERS AND OTHER HARDWARE SHALL BE SAE GRADE 5 AND CADMIUM-PLATED.

SIDE VIEW

OVERHEAD SIGN LUMINAIRE MOUNTING DETAIL (TYPICAL)

Dist	COUNTY	ROUTE	POST MILES TOTAL PROJECT	SHEET No.	TOTAL SHEETS

H.R.J.
REGISTERED ELECTRICAL ENGINEER

REGISTERED PROFESSIONAL ENGINEER
Hamid Zolfaghari
No. E15636
Exp. 12-31-19
ELECTRICAL
STATE OF CALIFORNIA

October 19, 2018
PLANS APPROVAL DATE

THE STATE OF CALIFORNIA OR ITS OFFICERS OR AGENTS SHALL NOT BE RESPONSIBLE FOR THE ACCURACY OR COMPLETENESS OF SCANNED COPIES OF THIS PLAN SHEET.

TO ACCOMPANY PLANS DATED _____

NOTES:

1. The first number listed is the dimension from the edge of the sign panel to the center of the end-most sign luminaire. The second number listed is the dimension between centers of successive sign luminaire.
2. Where adjacent sign panels are spaced 1'-0" or less the combination of these panels (and spaces) shall be considered a single panel.
3. Physical configuration and mounting details may vary from what is shown.

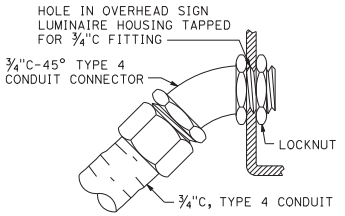

CONDUIT ENTRANCE DETAIL

STATE OF CALIFORNIA
DEPARTMENT OF TRANSPORTATION

ELECTRICAL SYSTEMS (SIGN ILLUMINATION EQUIPMENT)

NO SCALE

RSP ES-15A DATED OCTOBER 19, 2018 SUPERSEDES STANDARD PLAN ES-15A DATED MAY 31, 2018 - PAGE 549 OF THE STANDARD PLANS BOOK DATED 2018.

REVISED STANDARD PLAN RSP ES-15A

2018 REVISED STANDARD PLAN RSP ES-15A

5-21-18

© 2018 California Department of Transportation
All Rights Reserved

Dist	COUNTY	ROUTE	POST MILES TOTAL PROJECT	SHEET No.	TOTAL SHEETS

H. R. J.
REGISTERED ELECTRICAL ENGINEER

REGISTERED PROFESSIONAL ENGINEER
Hamid Zolfaghari
No. E15636
Exp. 12-31-19
ELECTRICAL
STATE OF CALIFORNIA

October 19, 2018
PLANS APPROVAL DATE

THE STATE OF CALIFORNIA OR ITS OFFICERS OR AGENTS SHALL NOT BE RESPONSIBLE FOR THE ACCURACY OR COMPLETENESS OF SCANNED COPIES OF THIS PLAN SHEET.

TO ACCOMPANY PLANS DATED _____

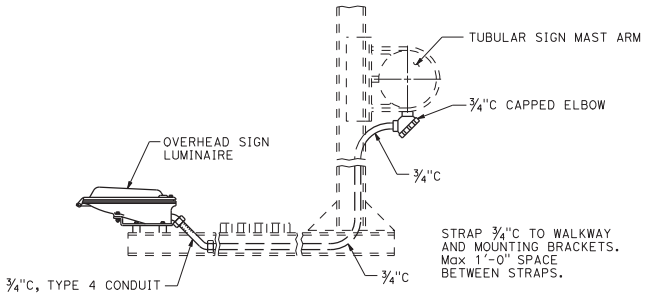

TYPICAL SIGN ILLUMINATION EQUIPMENT INSTALLATION FOR OVERHEAD SIGNS TUBULAR

DETAIL A

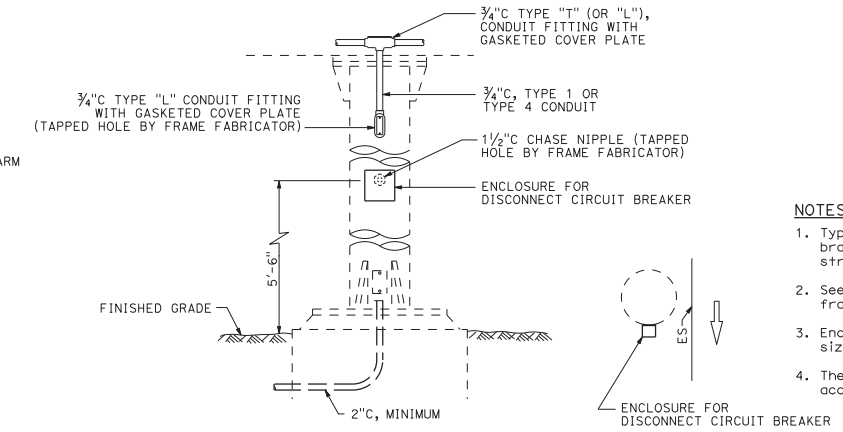

TYPICAL SIGN ILLUMINATION EQUIPMENT INSTALLATION FOR OVERHEAD SIGNS ROUND POST

DETAIL B

NOTES:

1. Type 4 conduit shall be secured to the nearest walkway bracket using one-hole galvanized malleable iron or steel straps and brass machine screws tapped into the bracket.
2. See Overhead Signs Standard Plans for overhead signs and frame juncture details for photoelectric unit installation.
3. Enclosures and straps shall be secured by ⅜" maximum size screws.
4. The contactor and test switch enclosures shall be readily accessible from the sign walkway.

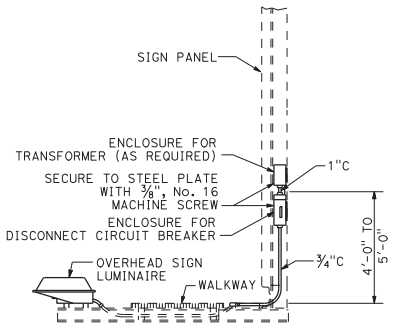

SIDE VIEW

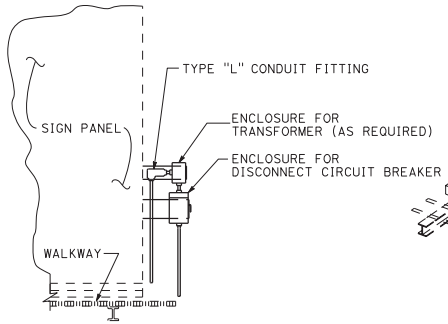

FRONT VIEW

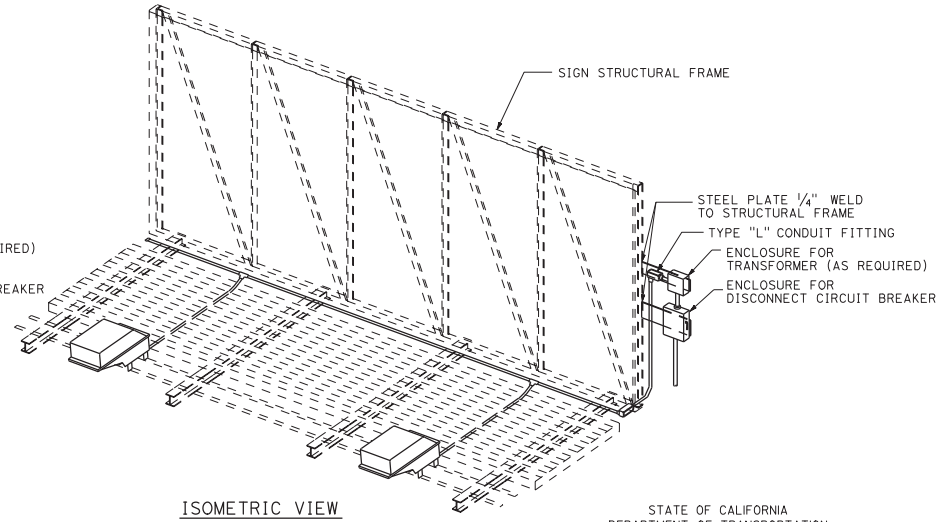

ISOMETRIC VIEW

TYPICAL SIGN ILLUMINATION EQUIPMENT INSTALLATION FOR OVERHEAD SIGNS BRIDGE MOUNTED

DETAIL C
See Note 4

STATE OF CALIFORNIA
DEPARTMENT OF TRANSPORTATION

ELECTRICAL SYSTEMS (SIGN ILLUMINATION EQUIPMENT)

NO SCALE

RSP ES-15C DATED OCTOBER 19, 2018 SUPERSEDES STANDARD PLAN ES-15C DATED MAY 31, 2018 - PAGE 550 OF THE STANDARD PLANS BOOK DATED 2018.

REVISED STANDARD PLAN RSP ES-15C

2018 REVISED STANDARD PLAN RSP ES-15C

5-2-18

© 2018 California Department of Transportation
All Rights Reserved

Dist	COUNTY	ROUTE	POST MILES TOTAL PROJECT	SHEET No.	TOTAL SHEETS

H. R. J.
REGISTERED ELECTRICAL ENGINEER

REGISTERED PROFESSIONAL ENGINEER
Hamid Zolfaghari
No. E15636
Exp. 12-31-19
ELECTRICAL
STATE OF CALIFORNIA

October 19, 2018
PLANS APPROVAL DATE

THE STATE OF CALIFORNIA OR ITS OFFICERS OR AGENTS SHALL NOT BE RESPONSIBLE FOR THE ACCURACY OR COMPLETENESS OF SCANNED COPIES OF THIS PLAN SHEET.

TO ACCOMPANY PLANS DATED _____

NOTE:

1. Type SC1A, SC2A, SC3A controls are similar to Types SC1, SC2 and SC controls respectively except test switch and wiring are not required.

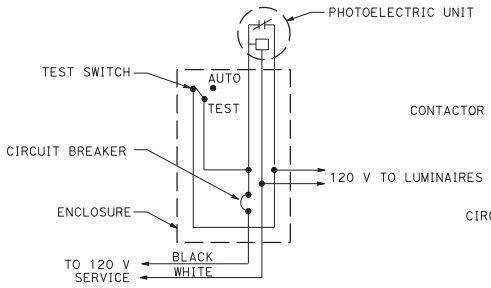

TYPE LC1 CONTROL

For 120 V unswitched circuit with no more than 1000 W load.

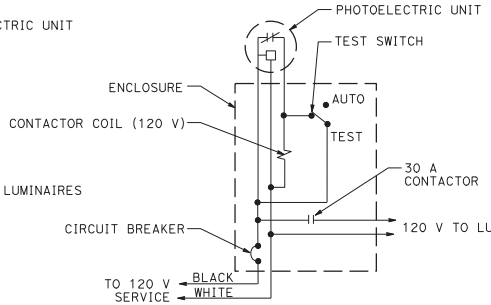

TYPE LC2 CONTROL

For 120 V unswitched circuit

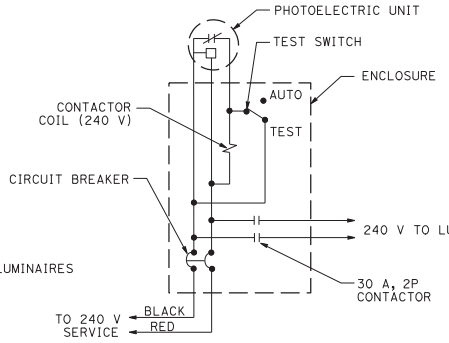

TYPE LC3 CONTROL

For 240 V unswitched circuits

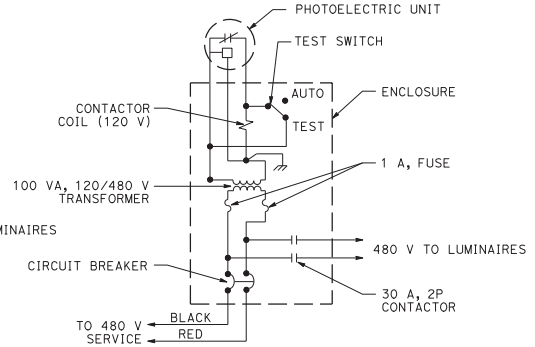

TYPE LC4 CONTROL

For 480 V unswitched circuits

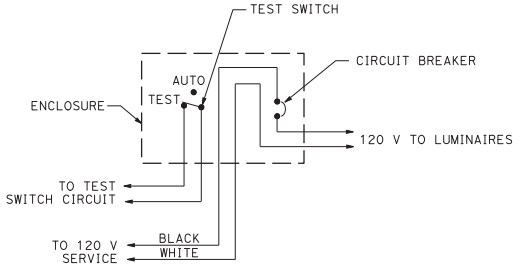

TYPE SC1 CONTROL

For 120 V switched circuit, see Note 1 for Type SC1A

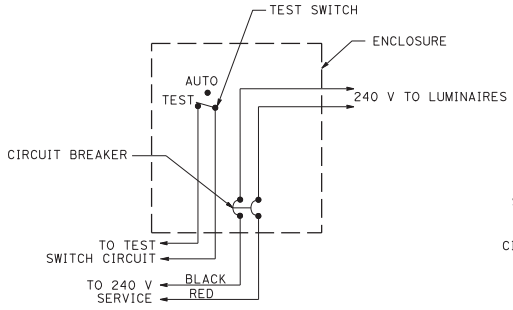

TYPE SC2 CONTROL

For 240 V switched circuit, see Note 1 for Type SC2A

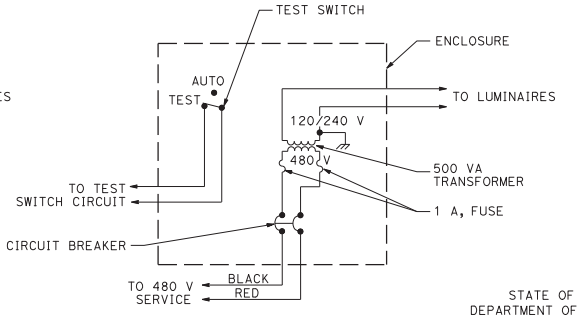

TYPE SC3 CONTROL

For 480 V switched sign circuit, see Note 1 for Type SC3A

STATE OF CALIFORNIA
DEPARTMENT OF TRANSPORTATION

ELECTRICAL SYSTEMS (LIGHTING AND SIGN ILLUMINATION CONTROL)

NO SCALE

RSP ES-15D DATED OCTOBER 19, 2018 SUPERSEDES STANDARD PLAN ES-15D DATED MAY 31, 2018 - PAGE 551 OF THE STANDARD PLANS BOOK DATED 2018.

REVISED STANDARD PLAN RSP ES-15D

2018 REVISED STANDARD PLAN RSP ES-15D

5-21-18

© 2018 California Department of Transportation
All Rights Reserved

POLE TYPE	POLE DATA				BASE PLATE DATA				CIDH	
	HEIGHT "h"	Min OD		THICKNESS	"C"	THICKNESS	ANCHOR BOLT SIZE	BC = BOLT CIRCLE	Dia	"d"
		BASE	TOP							
CAMERA POLE 25	25′	7 3/8"	3 3/4"	0.1793"	1′-1"	1"	1 1/2" ø x 36"	11 1/2"	2′-6"	7′-0"
CAMERA POLE 30	30′	8"			1′-1 1/2"			1′-0"		7′-6"
CAMERA POLE 35	35′	8 5/8"			1′-2"			1′-1"		8′-0"
CAMERA POLE 40	40′	9 3/8"			1′-3"			1′-1 1/2"		8′-6"
CAMERA POLE 45	45′	10"						1′-2"		

Dist	COUNTY	ROUTE	POST MILES TOTAL PROJECT	SHEET No.	TOTAL SHEETS

REGISTERED CIVIL ENGINEER

October 19, 2018
PLANS APPROVAL DATE

Stanley P. Johnson
No. C57793
Exp. 3-31-20
CIVIL
REGISTERED PROFESSIONAL ENGINEER
STATE OF CALIFORNIA

THE STATE OF CALIFORNIA OR ITS OFFICERS OR AGENTS SHALL NOT BE RESPONSIBLE FOR THE ACCURACY OR COMPLETENESS OF SCANNED COPIES OF THIS PLAN SHEET.

TO ACCOMPANY PLANS DATED _____

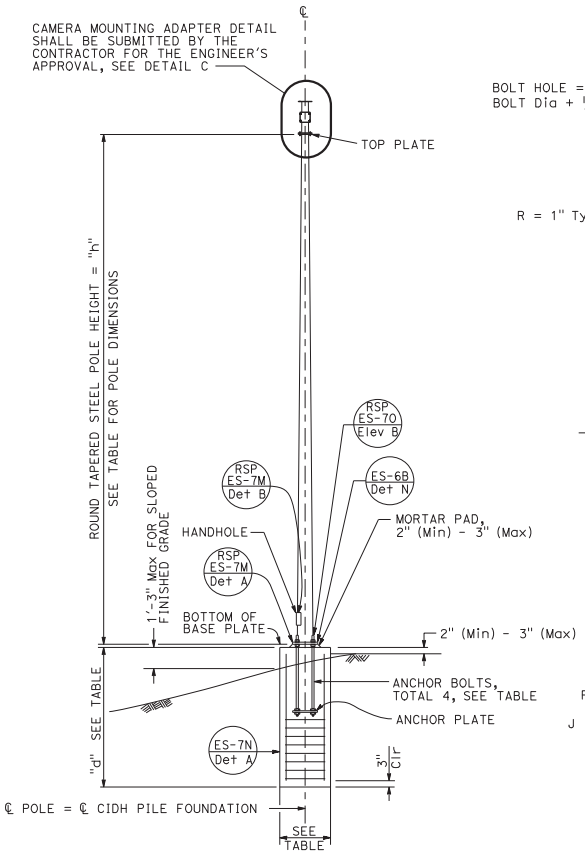

ELEVATION A

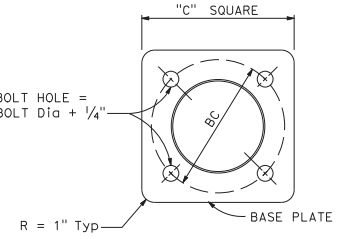

BASE PLATE
DETAIL A

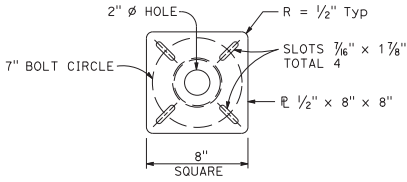

TOP PLATE
DETAIL B

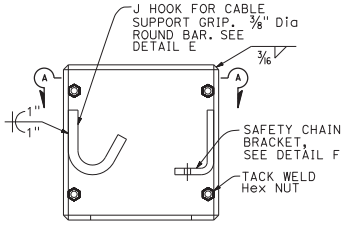

BOX ENCLOSURE
DETAIL D

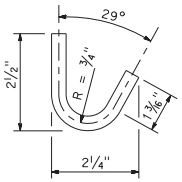

J HOOK
DETAIL E

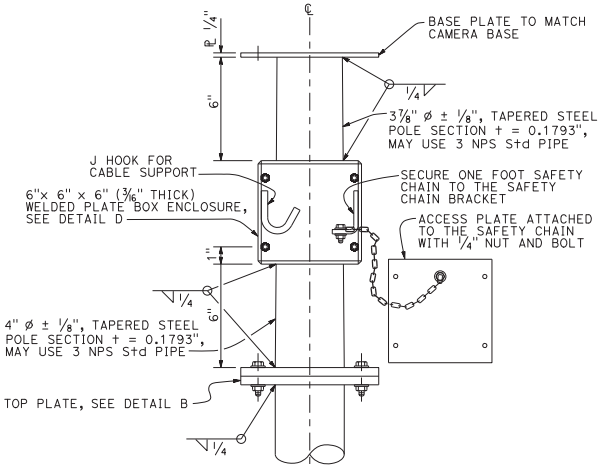

CAMERA MOUNTING ADAPTER
DETAIL C

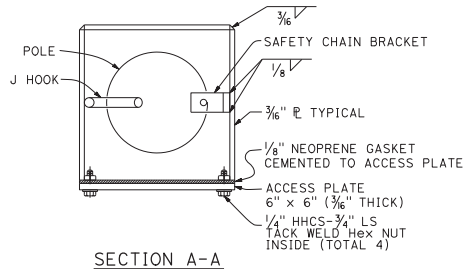

SECTION A-A

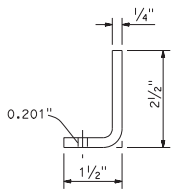

SAFETY CHAIN BRACKET
DETAIL F

NOTES:

1. Verify controlling field dimensions before ordering or fabricating any material.
2. During pole installation, the post shall be raked as necessary with the use of leveling nuts to provide a plumb pole axis.
3. For wind loading see Revised Standard Plan RSP ES-7M.
4. Materials (Structural Steel):
   a. fy = 55,000 psi (tapered steel tube and anchor bolts)
   b. fy = 50,000 psi (unless otherwise noted)
5. Materials (Reinforced Concrete):
   a. f′c = 3,625 psi
   b. fy = 60,000 psi

STATE OF CALIFORNIA
DEPARTMENT OF TRANSPORTATION

ELECTRICAL SYSTEMS (CAMERA POLE 25' TO 45')

NO SCALE

RSP ES-16B DATED OCTOBER 19, 2018 SUPERSEDES STANDARD PLAN ES-16B DATED MAY 31, 2018 - PAGE 553 OF THE STANDARD PLANS BOOK DATED 2018.

REVISED STANDARD PLAN RSP ES-16B

2018 REVISED STANDARD PLAN RSP ES-16B

6-5-18

© 2018 California Department of Transportation
All Rights Reserved

Dist	COUNTY	ROUTE	POST MILES TOTAL PROJECT	SHEET No.	TOTAL SHEETS

REGISTERED CIVIL ENGINEER

October 19, 2018
PLANS APPROVAL DATE

REGISTERED PROFESSIONAL ENGINEER — Stanley P. Johnson — No. C57793 — Exp. 3-31-20 CIVIL — STATE OF CALIFORNIA

THE STATE OF CALIFORNIA OR ITS OFFICERS OR AGENTS SHALL NOT BE RESPONSIBLE FOR THE ACCURACY OR COMPLETENESS OF SCANNED COPIES OF THIS PLAN SHEET.

TO ACCOMPANY PLANS DATED _____

POLE SELECTION TABLE

LEGEND

- Wood Pole No Attachments
- A — Wood Pole with Attachments
- —OH— Overhead Bundle

OVERHEAD BUNDLE HORIZONTAL SPAN (Max)		MAXIMUM d_p	CASE 1N: 1"	1.5"	2.0"	2.5"	CASE 2N: 1"	1.5"	2.0"	2.5"	CASE 3N: 1.0"	1.5"	2.0"	2.5"	CASE 4N: 1"	1.5"	2.0"	2.5"	CASE 5N
			—OH— A				150° Min 180° Max				90° Min 180° Max				90° SEE NOTE 1 60° Min 120° Max				A
			CASE 1N				CASE 2N				CASE 3N				CASE 4N				CASE 5N
50′		MINIMUM POLE CLASS	H-1	H-2	H-2	H-2	4	3	2	1	H-2	H-2	H-3	H-3	H-4	H-4	H-4	H-5	N/A
		POLE EMBEDMENT (E)	11′				10′				11′				12′				
100′		MINIMUM POLE CLASS	H-2	H-3	H-4	H-5	1	H-1	H-2	H-3	H-4	H-5	H-5	H-6	H-5	H-5	H-6		CLASS 1 E = 10′
		POLE EMBEDMENT (E)	12′				11′				12′				12′				
150′		MINIMUM POLE CLASS	H-4	H-5	H-6		H-1	H-2	H-3	H-5	H-6				H-6				
		POLE EMBEDMENT (E)	12′				12′				12′				12′				
200′		MINIMUM POLE CLASS	H-5	H-6			H-2	H-3	H-5										
		POLE EMBEDMENT (E)	12′				12′												

1. Camera or vehicle detection system
2. Overhead bundle consisting of a 3/8" ø messenger wire, overhead conductors, and lashing wire
3. Luminaire with mast arm
4. Pedestrian push button or accessible push button
5. Signal face with 3 indications or single sheet sign panel (10 SQFT Max)
6. Riser with weather head as required
7. Pull box as required
8. Grounding as required
9. Single flashing beacon or single sheet sign panel (4 SQFT Max)
10. Single sheet sign panel (4′ x 4′ Max) or signal face with 3 indications
11. Flashing beacon control assembly
12. Enclosure, 26"(W) x 56"(H) x 12"(D) Max dimensions. Max weight including batteries, 450 lbs
13. 25′ SQFT Max total photovoltaic panels mounted as shown as required
14. 2-12" flashing beacons

NOTES:

1. In addition to other restrictions on maximum horizontal span, this horizontal span must not exceed 100′.
2. Cases 1N, 3N and 4N may substitute the attachments shown in Case 5N if the photovoltaic panel is not included.
3. For Case 1N without an overhead bundle (item 2) use minimum pole class H-1 with E=11′.

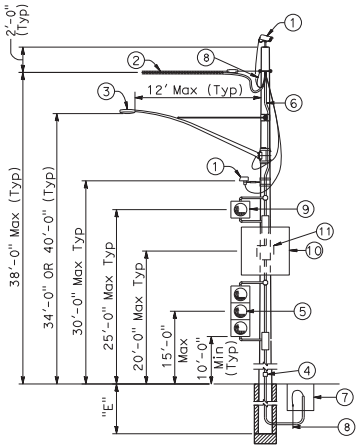

CASE 1N
POLE AT DEAD END WITH ATTACHMENTS
See Note 2

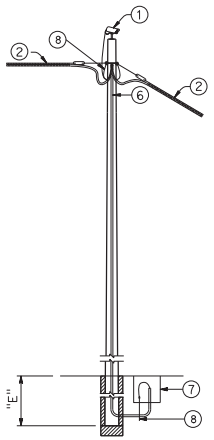

CASE 2N
POLE AT TANGENT WITHOUT ATTACHMENTS

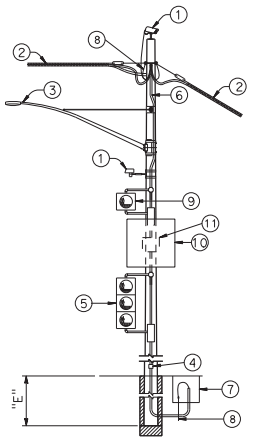

CASE 3N
POLE AT TANGENT OR CORNER WITH ATTACHMENTS
See Note 2

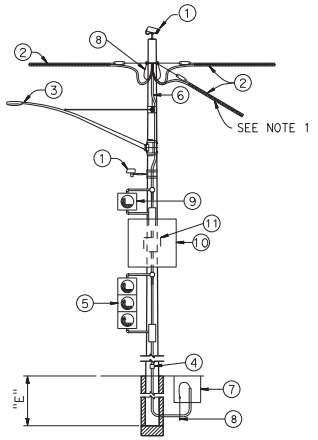

CASE 4N
POLE AT JUNCTION WITH ATTACHMENTS
See Note 2

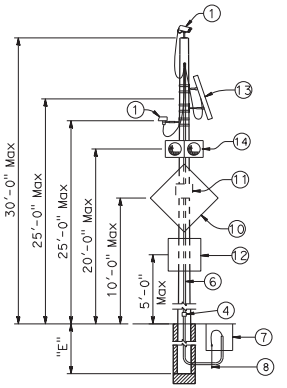

CASE 5N
POLE WITHOUT OVERHEAD BUNDLE WITH ATTACHMENTS

STATE OF CALIFORNIA
DEPARTMENT OF TRANSPORTATION

TEMPORARY WOOD POLES NON-GUYED - NO SIGNALS ON SPANS

NO SCALE

RSP ES-18B DATED OCTOBER 19, 2018 SUPERSEDES STANDARD PLAN ES-18B
DATED MAY 31, 2018 - PAGE 558 OF THE STANDARD PLANS BOOK DATED 2018.

REVISED STANDARD PLAN RSP ES-18B

2018 REVISED STANDARD PLAN RSP ES-18B

5-15-18

© 2018 California Department of Transportation
All Rights Reserved

Dist	COUNTY	ROUTE	POST MILES TOTAL PROJECT	SHEET No.	TOTAL SHEETS

REGISTERED CIVIL ENGINEER

October 19, 2018
PLANS APPROVAL DATE

REGISTERED PROFESSIONAL ENGINEER
Stanley P. Johnson
No. C57793
Exp. 3-31-20
CIVIL
STATE OF CALIFORNIA

THE STATE OF CALIFORNIA OR ITS OFFICERS OR AGENTS SHALL NOT BE RESPONSIBLE FOR THE ACCURACY OR COMPLETENESS OF SCANNED COPIES OF THIS PLAN SHEET.

TO ACCOMPANY PLANS DATED _____

POLE SELECTION TABLE

LEGEND

A — Wood Pole with Attachments

—OH— Overhead Bundle

Guy Anchor

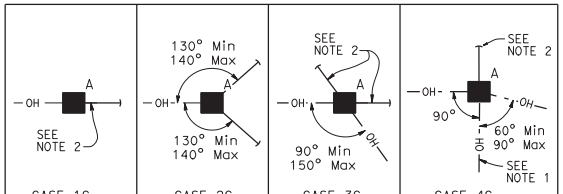

OVERHEAD BUNDLE HORIZONTAL SPAN (Max)		MAXIMUM d_p	CASE 1G 1"	1.5"	2.0"	2.5"	CASE 2G 1"	1.5"	2.0"	2.5"	CASE 3G 1"	1.5"	2.0"	2.5"	CASE 4G 1"	1.5"	2.0"	2.5"
50′		MINIMUM POLE CLASS	H-1	H-1	H-2	H-2	1	1	1	1	1	1	1	H-1	H-2	H-2	H-3	H-3
		POLE EMBEDMENT (E)	10′				9′				9′				11′			
100′		MINIMUM POLE CLASS	H-2	H-2	H-3	H-4	1	H-1	H-1	H-1	1	H-1	H-2	H-2	H-3	H-3	H-4	H-4
		POLE EMBEDMENT (E)	11′				9′				9′				12′			
150′		MINIMUM POLE CLASS	H-3	H-3	H-4	H-5	H-1	H-1	H-2	H-2	H-2	H-3	H-3	H-3	H-4	H-5	H-5	H-6
		POLE EMBEDMENT (E)	11′				9′				9′				12′			
200′		MINIMUM POLE CLASS	H-4	H-4	H-5	H-6	H-1	H-2	H-3	H-3	H-3	H-3	H-4	H-4	H-5	H-6		
		POLE EMBEDMENT (E)	11′				9′				9′				12′			

1. Camera or vehicle detection system
2. Overhead bundle consisting of a ⅜" ø messenger wire, overhead conductors, and lashing wire
3. Luminaire with mast arm
4. Pedestrian push button or accessible push button
5. Signal face with 3 indications or single sheet sign panel (10 SQFT Max)
6. Riser with weather head as required
7. Pull box as required
8. Grounding as required
9. Single flashing beacon or single sheet sign panel (4 SQFT Max)
10. Single sheet sign panel (4′ x 4′ Max) or signal face with 3 indications
11. Flashing beacon control assembly
12. ½" ø guy wire with white guy marker and strain insulator (for anchorage see "TEMPORARY WOOD POLES-DETAILS No. 2" sheet)

NOTES:

1. In addition to other restrictions on maximum horizontal span, this horizontal span must not exceed 100′.
2. Guy wire in line with opposing span ± 5°.

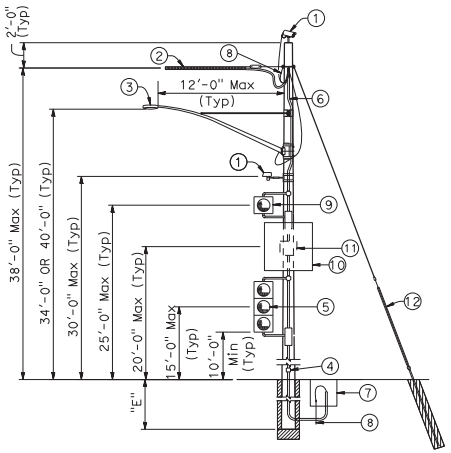

CASE 1G
POLE AT DEAD END
WITH ATTACHMENTS

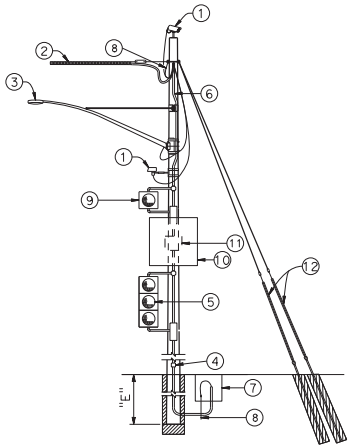

CASE 2G
POLE AT DEAD END
WITH ATTACHMENTS

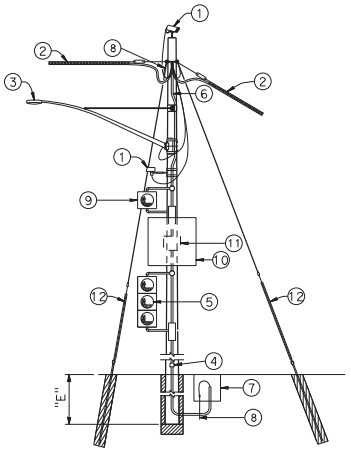

CASE 3G
POLE AT CORNER
WITH ATTACHMENTS

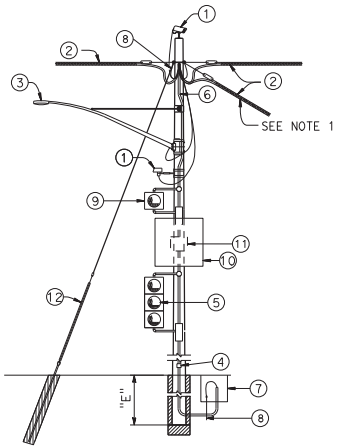

CASE 4G
POLE AT JUNCTION
WITH ATTACHMENTS

STATE OF CALIFORNIA
DEPARTMENT OF TRANSPORTATION

TEMPORARY WOOD POLES
GUYED - NO SIGNALS ON SPANS

NO SCALE

RSP ES-18C DATED OCTOBER 19, 2018 SUPERSEDES STANDARD PLAN ES-18C
DATED MAY 31, 2018 - PAGE 559 OF THE STANDARD PLANS BOOK DATED 2018.

REVISED STANDARD PLAN RSP ES-18C

2018 REVISED STANDARD PLAN RSP ES-18C

5-15-18

© 2018 California Department of Transportation
All Rights Reserved

Dist	COUNTY	ROUTE	POST MILES TOTAL PROJECT	SHEET No.	TOTAL SHEETS

REGISTERED CIVIL ENGINEER

October 19, 2018
PLANS APPROVAL DATE

Stanley P. Johnson
No. C57793
Exp. 3-31-20
CIVIL
REGISTERED PROFESSIONAL ENGINEER
STATE OF CALIFORNIA

THE STATE OF CALIFORNIA OR ITS OFFICERS OR AGENTS SHALL NOT BE RESPONSIBLE FOR THE ACCURACY OR COMPLETENESS OF SCANNED COPIES OF THIS PLAN SHEET.

TO ACCOMPANY PLANS DATED _____

LEGEND

- A — Wood Pole with Attachments
- —TS— Overhead Bundle with Signal Faces (See Note 2)
- —OH— Overhead Bundle
- Guy Anchor

POLE SELECTION TABLE

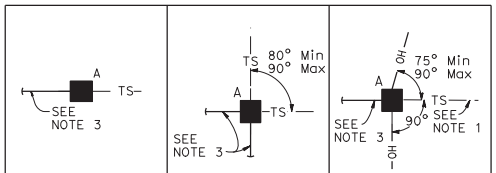

OVERHEAD BUNDLE HORIZONTAL SPAN Max		MAXIMUM d_p	CASE 1GT 1"	CASE 1GT 1.5"	CASE 1GT 2.0"	CASE 2GT 1"	CASE 2GT 1.5"	CASE 2GT 2.0"	CASE 3GT 1"	CASE 3GT 1.5"	CASE 3GT 2.0"
	50'	MINIMUM POLE CLASS	H-2	H-3	H-3	H-2	H-2	H-2	H-3	H-4	H-4
		POLE EMBEDMENT (E)	10'			10'			11'		
	100'	MINIMUM POLE CLASS	H-3	H-3	H-4	H-2	H-3	H-3	H-4	H-4	H-5
		POLE EMBEDMENT (E)	11'			10'			11'		
	150'	MINIMUM POLE CLASS	H-3	H-4	H-4	H-2	H-3	H-4	H-4	H-5	H-5
		POLE EMBEDMENT (E)	11'			10'			11'		

NOTES:

1. In addition to other restrictions on maximum horizontal span, this horizontal span must not exceed 100'.
2. Maximum of 2 SIGNAL FACES per span within the hatched regions indicated by "LOCATION OF SIGNAL FACES".
3. Guy wire in line with opposing span ± 5°.

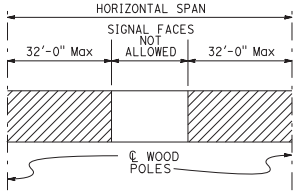

LOCATION OF SIGNAL FACES

1. Camera or vehicle detection system
2. Overhead bundle consisting of ⅜" ø messenger wire and overhead conductors and lashing wire
3. Luminaire with mast arm
4. Pedestrian push button or accessible push button
5. Signal face with 3 indications or single sheet sign panel (10 SQFT Max)
6. Riser with weather head as required
7. Pull box as required
8. Grounding as required
9. ⅜" ø tether wire
10. ½" ø guy wire with white guy marker and strain insulator. For anchorage see "TEMPORARY WOOD POLES-DETAILS No. 2" sheet
11. Pedestrian signal head

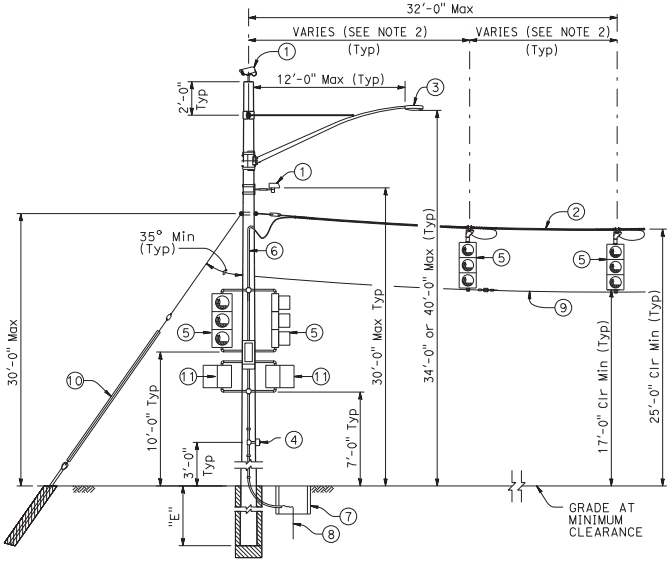

CASE 1GT
POLE AT DEAD END WITH ATTACHMENTS

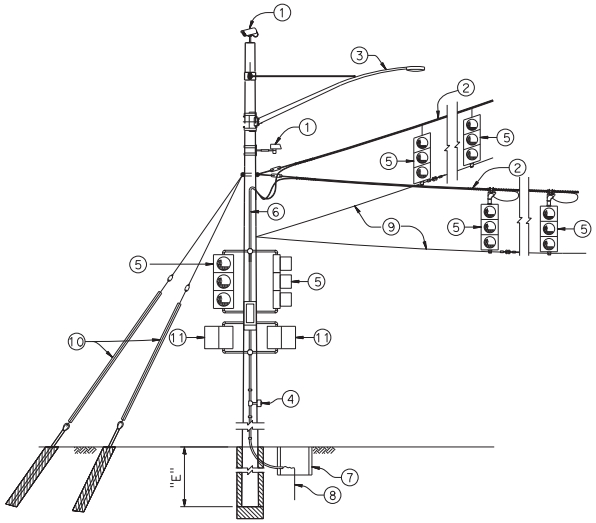

CASE 2GT
POLE AT CORNER WITH ATTACHMENTS

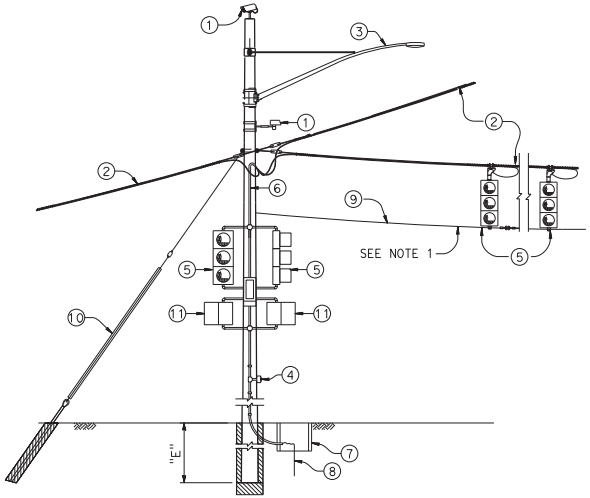

CASE 3GT
POLE AT JUNCTION WITH ATTACHMENTS

STATE OF CALIFORNIA
DEPARTMENT OF TRANSPORTATION

TEMPORARY WOOD POLES GUYED - WITH SIGNAL FACES ON SPANS

NO SCALE

RSP ES-18D DATED OCTOBER 19, 2018 SUPERSEDES STANDARD PLAN ES-18D DATED MAY 31, 2018 - PAGE 560 OF THE STANDARD PLANS BOOK DATED 2018.

REVISED STANDARD PLAN RSP ES-18D

2018 REVISED STANDARD PLAN RSP ES-18D

5-15-18

© 2018 California Department of Transportation
All Rights Reserved

Dist	COUNTY	ROUTE	POST MILES TOTAL PROJECT	SHEET No.	TOTAL SHEETS

REGISTERED CIVIL ENGINEER

October 19, 2018
PLANS APPROVAL DATE

Stanley P. Johnson
No. C57793
Exp. 3-31-20
CIVIL
REGISTERED PROFESSIONAL ENGINEER
STATE OF CALIFORNIA

THE STATE OF CALIFORNIA OR ITS OFFICERS OR AGENTS SHALL NOT BE RESPONSIBLE FOR THE ACCURACY OR COMPLETENESS OF SCANNED COPIES OF THIS PLAN SHEET.

TO ACCOMPANY PLANS DATED _____

LEGEND

A — Wood Pole with Attachments

— TS — Overhead Bundle with Signal Faces (See Note 1)

POLE SELECTION TABLE

OVERHEAD BUNDLE HORIZONTAL SPAN (Max)			A — TS — CASE 1NT		
	75′	MAXIMUM d_p	1"	1.5"	2.0"
		MINIMUM POLE CLASS	H-5	H-6	H-6
		POLE EMBEDMENT (E)	13′		

1. Camera or vehicle detection system
2. Overhead bundle consisting of a ⅜" ø messenger wire and overhead conductors and lashing wire
3. Luminaire with mast arm
4. Pedestrian push button or accessible push button
5. Signal face with 3 indications or single sheet sign panel (10 SQFT Max)
6. Riser with weather head as required
7. Pull box as required
8. Grounding as required
9. ⅜" ø tether wire
10. Pedestrian signal head

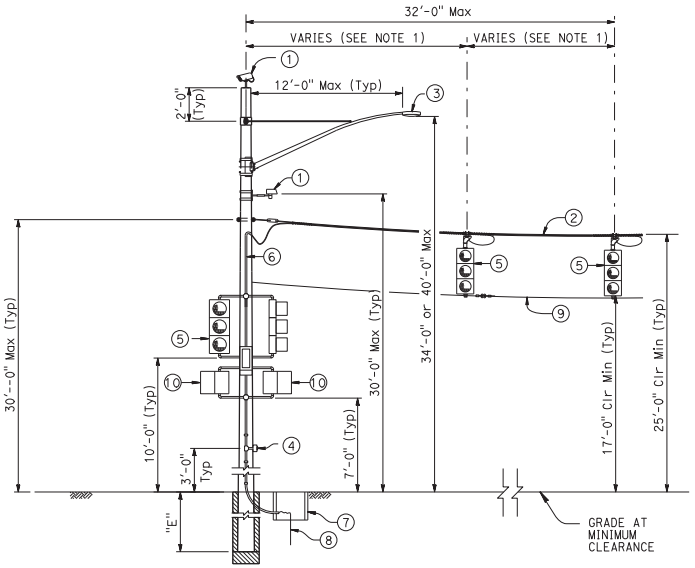

CASE 1NT

POLE AT DEAD END WITH ATTACHMENTS

NOTE:

1. Maximum of 2 SIGNAL FACES per span within the hatched regions indicated by "LOCATION OF SIGNAL FACES".

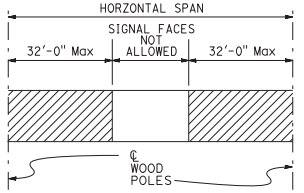

LOCATION OF SIGNAL FACES

STATE OF CALIFORNIA
DEPARTMENT OF TRANSPORTATION

TEMPORARY WOOD POLES NON-GUYED-WITH SIGNAL FACES ON SPAN

NO SCALE

RSP ES-18E DATED OCTOBER 19, 2018 SUPERSEDES STANDARD PLAN ES-18E DATED MAY 31, 2018 - PAGE 561 OF THE STANDARD PLANS BOOK DATED 2018.

REVISED STANDARD PLAN RSP ES-18E

2018 REVISED STANDARD PLAN RSP ES-18E

5-15-18

© 2018 California Department of Transportation
All Rights Reserved

Dist	COUNTY	ROUTE	POST MILES TOTAL PROJECT	SHEET No.	TOTAL SHEETS

REGISTERED CIVIL ENGINEER

October 19, 2018
PLANS APPROVAL DATE

Stanley P. Johnson
No. C57793
Exp. 3-31-20
CIVIL
REGISTERED PROFESSIONAL ENGINEER
STATE OF CALIFORNIA

THE STATE OF CALIFORNIA OR ITS OFFICERS OR AGENTS SHALL NOT BE RESPONSIBLE FOR THE ACCURACY OR COMPLETENESS OF SCANNED COPIES OF THIS PLAN SHEET.

TO ACCOMPANY PLANS DATED _____

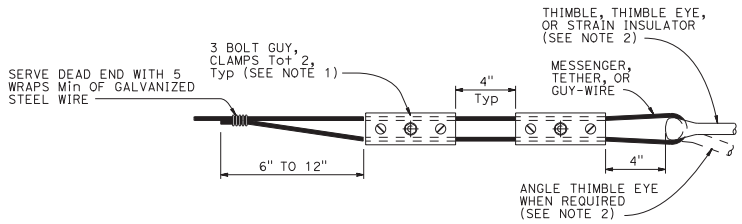

ALTERNATIVE TERMINATION OF MESSENGER WIRES USING GUY CLAMPS

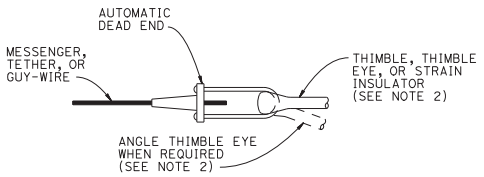

TERMINATION OF WIRES USING AUTOMATIC DEAD END

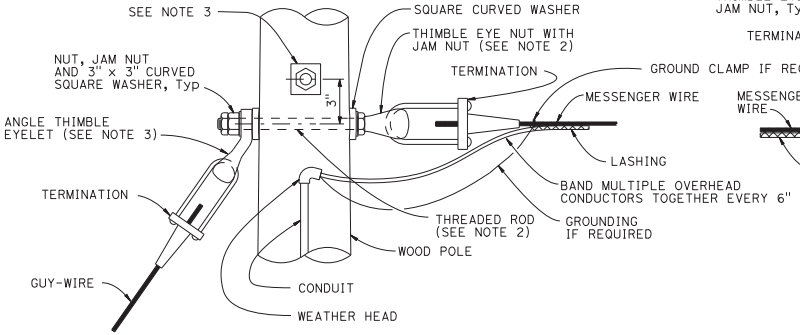

POLE AT DEAD END WITH GUY-WIRE CONNECTION

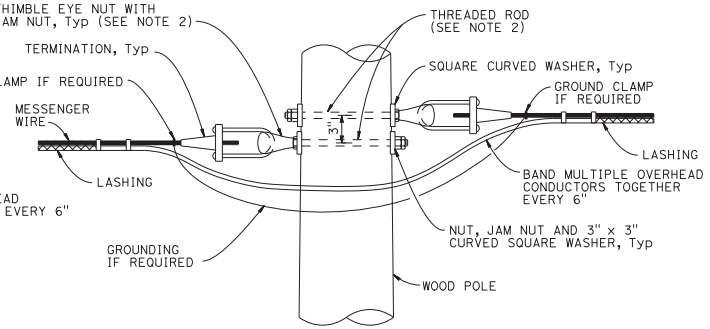

POLE AT TANGENT OR CORNER CONNECTION

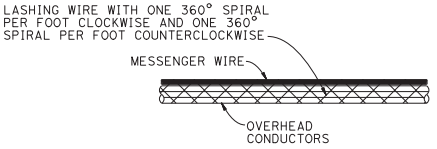

DOUBLE LASHING DETAIL

USE IF d_p IS GREATER THAN 1½"

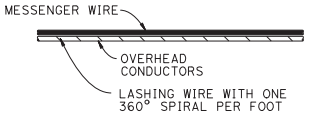

TYPICAL LASHING DETAIL

USE IF d_p IS 1½" OR LESS

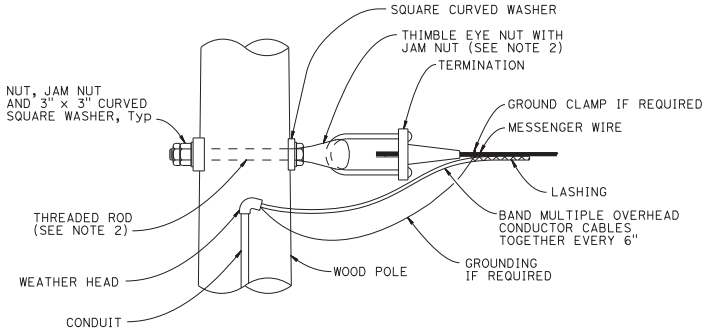

POLE AT DEAD END CONNECTION

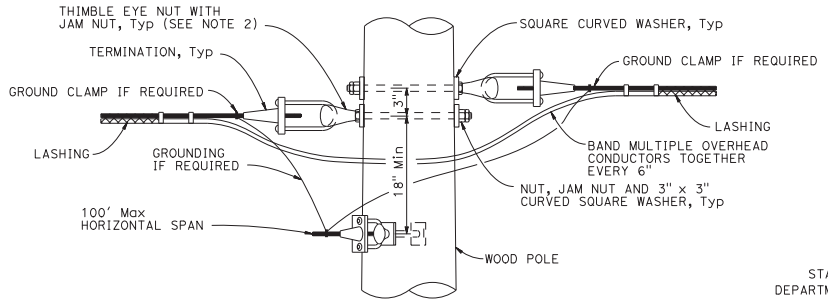

POLE AT JUNCTION CONNECTION

NOTES:

1. For guy wires use 3 clamps.
2. Use ⅝" ø except ¾" ø at guyed wires
3. Install additional angle thimble eyelet at poles with two guy wires.

STATE OF CALIFORNIA
DEPARTMENT OF TRANSPORTATION

TEMPORARY WOOD POLES DETAILS No. 1

NO SCALE

RSP ES-19A DATED OCTOBER 19, 2018 SUPERSEDES STANDARD PLAN ES-19A
DATED MAY 31, 2018 - PAGE 562 OF THE STANDARD PLANS BOOK DATED 2018.

REVISED STANDARD PLAN RSP ES-19A

2018 REVISED STANDARD PLAN RSP ES-19A

5-24-18

© 2018 California Department of Transportation
All Rights Reserved

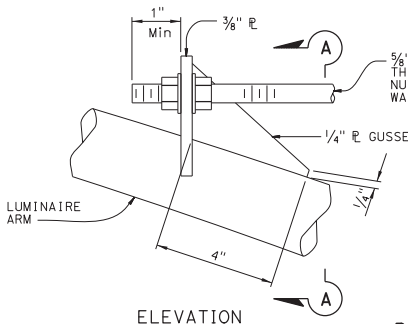

ELEVATION

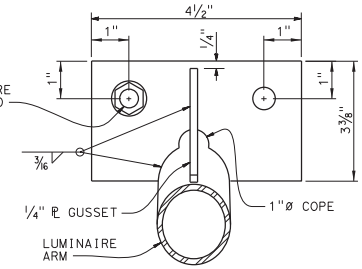

SECTION A-A

DETAIL A
TIE-ROD AT LUMINAIRE ARM

NOTES:

1. Luminaire mast arms must be in compliance with Standard Plan ES-6D with noted modifications.
2. Verify pole dimensions at tie-rod attachment height. Fabricate 9" flat bar with "L" Dimension to maintain an open gap between flanges in finished installation.
3. Not all screw heads and bolt heads are shown for clarity.
4. Mast arm not shown for clarity.

Dist	COUNTY	ROUTE	POST MILES TOTAL PROJECT	SHEET No.	TOTAL SHEETS

REGISTERED CIVIL ENGINEER

October 19, 2018
PLANS APPROVAL DATE

REGISTERED PROFESSIONAL ENGINEER — Stanley P. Johnson — No. C57793 — Exp. 3-31-20 CIVIL — STATE OF CALIFORNIA

THE STATE OF CALIFORNIA OR ITS OFFICERS OR AGENTS SHALL NOT BE RESPONSIBLE FOR THE ACCURACY OR COMPLETENESS OF SCANNED COPIES OF THIS PLAN SHEET.

TO ACCOMPANY PLANS DATED _____

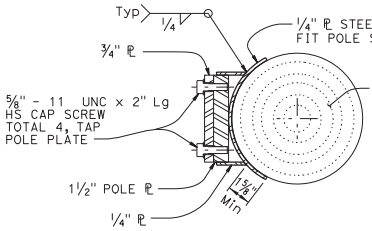

SECTION E-E

LUMINAIRE MAST ARM DATA			
PROJECTED LENGTH	N RISE	Min OD AT POLE	NOMINAL THICKNESS
6'-0"	2'-0"±	3 1/4"	0.1196"
8'-0"	2'-6"±	3 1/2"	
10'-0"	3'-3"±	3 7/8"	
12'-0"	4'-3"±		

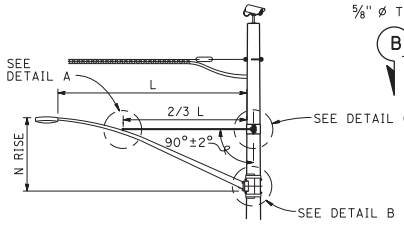

LUMINAIRE MAST ARM

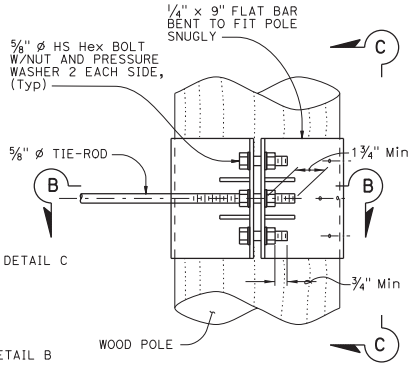

ELEVATION

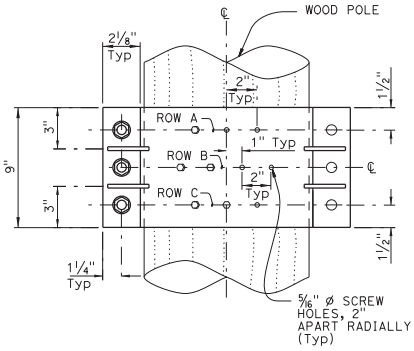

VIEW C-C

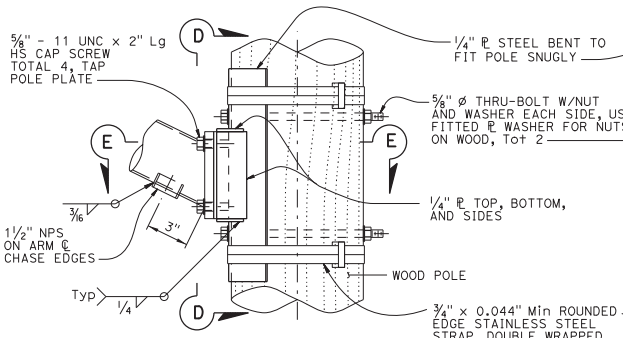

ELEVATION

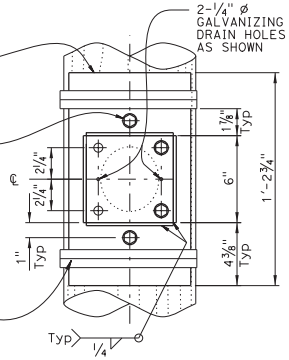

VIEW D-D

DETAIL B
ARM CONNECTION DETAILS

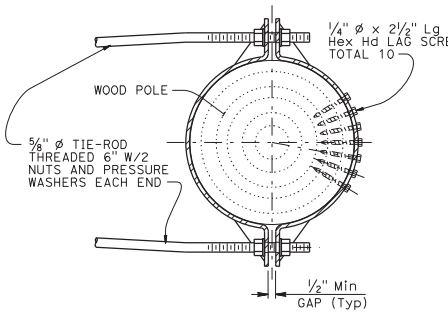

SECTION B-B

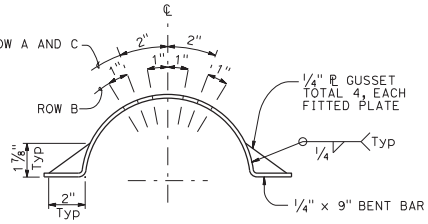

LAG SCREW AND GUSSET PLATE LAYOUT

DETAIL C
TIE-ROD AT POLE

STATE OF CALIFORNIA
DEPARTMENT OF TRANSPORTATION

TEMPORARY WOOD POLES DETAILS No. 3

NO SCALE

9RSP ES-19C DATED OCTOBER 19, 2018 SUPERSEDES STANDARD PLAN ES-19C DATED MAY 31, 2018 - PAGE 564 OF THE STANDARD PLANS BOOK DATED 2018.

REVISED STANDARD PLAN RSP ES-19C

2018 REVISED STANDARD PLAN RSP ES-19C

5-24-18

© 2018 California Department of Transportation
All Rights Reserved

Dist	COUNTY	ROUTE	POST MILES TOTAL PROJECT	SHEET No.	TOTAL SHEETS

REGISTERED CIVIL ENGINEER

October 19, 2018
PLANS APPROVAL DATE

REGISTERED PROFESSIONAL ENGINEER
Stanley P. Johnson
No. C57793
Exp. 3-31-20
CIVIL
STATE OF CALIFORNIA

THE STATE OF CALIFORNIA OR ITS OFFICERS OR AGENTS SHALL NOT BE RESPONSIBLE FOR THE ACCURACY OR COMPLETENESS OF SCANNED COPIES OF THIS PLAN SHEET.

TO ACCOMPANY PLANS DATED _____

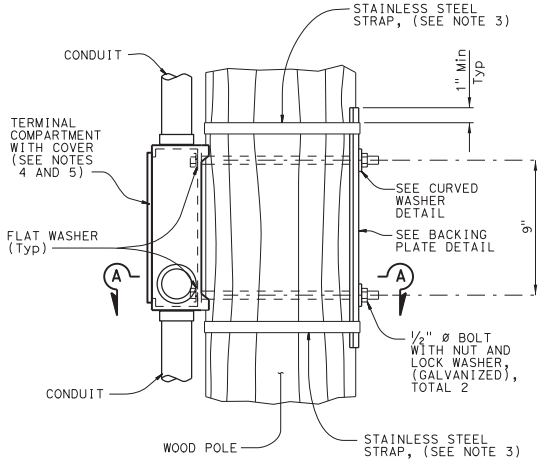

ELEVATION

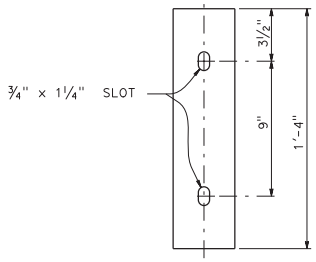

ELEVATION

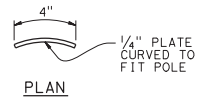

PLAN

BACKING PLATE DETAIL

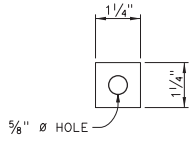

ELEVATION

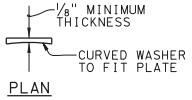

PLAN

CURVED WASHER DETAIL

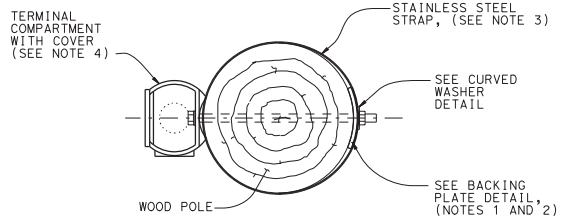

SECTION A-A

SIDE MOUNTING TERMINAL COMPARTMENT

NOTES:

1. Verify pole dimensions at terminal compartment for fabrication of backing plate and curved washer.
2. Backing plate to be galvanized after fabrication.
3. ¾" x 0.044" minimum, rounded edge stainless steel straps, double wrapped with 2" long bend under stainless steel strap buckle.
4. For miscellaneous details for signal mounting not shown see Revised Standard Plan RSP ES-4D.
5. If the terminal compartment has a cable entry guide on the rear face, remove the cable entry guide to a level that will not interfere with the wood post. Close any unused cable entry locations with raintight cap.

STATE OF CALIFORNIA
DEPARTMENT OF TRANSPORTATION

TEMPORARY WOOD POLES DETAILS No. 4

NO SCALE

RSP ES-19D DATED OCTOBER 19, 2018 SUPERSEDES STANDARD PLAN ES-19D DATED MAY 31, 2018 - PAGE 565 OF THE STANDARD PLANS BOOK DATED 2018.

REVISED STANDARD PLAN RSP ES-19D

2018 REVISED STANDARD PLAN RSP ES-19D

4-17-18

© 2019 California Department of Transportation
All Rights Reserved

Dist	COUNTY	ROUTE	POST MILES TOTAL PROJECT	SHEET No.	TOTAL SHEETS

LICENSED LANDSCAPE ARCHITECT

April 19, 2019
PLANS APPROVAL DATE

THE STATE OF CALIFORNIA OR ITS OFFICERS OR AGENTS SHALL NOT BE RESPONSIBLE FOR THE ACCURACY OR COMPLETENESS OF SCANNED COPIES OF THIS PLAN SHEET.

LICENSED LANDSCAPE ARCHITECT — Stephen T. Ferrone, 5880 — Signature — 9-30-19 Renewal Date — Date — STATE OF CALIFORNIA

TO ACCOMPANY PLANS DATED _____

NOTES:

1. See Project Plans for type and quantity of sprinklers.
2. Refer to plant legend and Standard Plan H2 for plant basin dimensions.

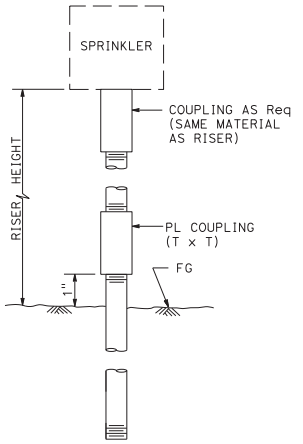

ELEVATION

RISER TYPE I

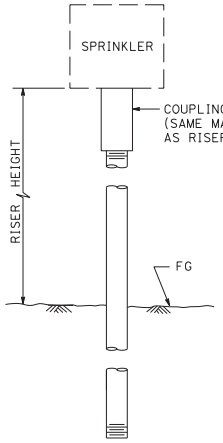

ELEVATION

RISER TYPE II

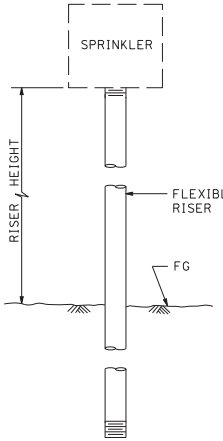

ELEVATION

RISER TYPE III

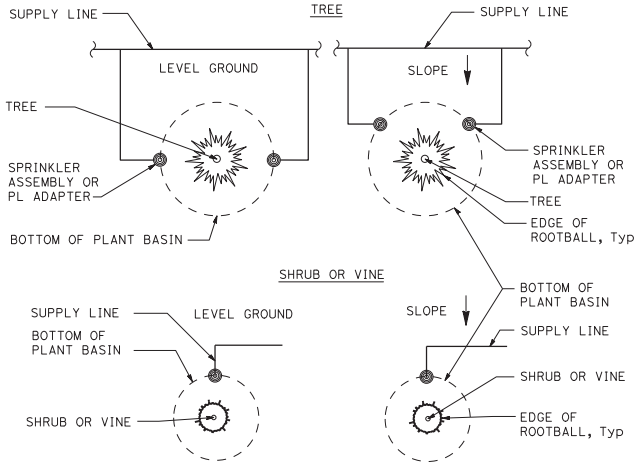

PLAN

TREE WELL ASSEMBLY AND RISER TYPE V DIAGRAM

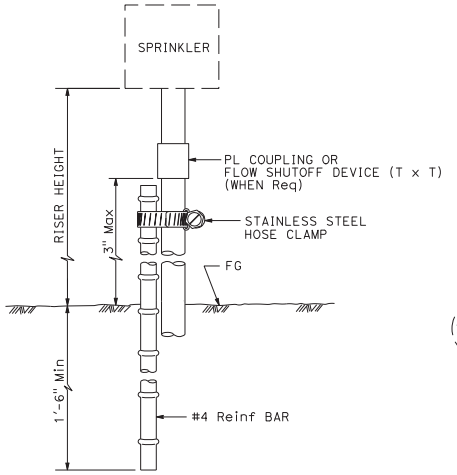

ELEVATION

RISER TYPE IV

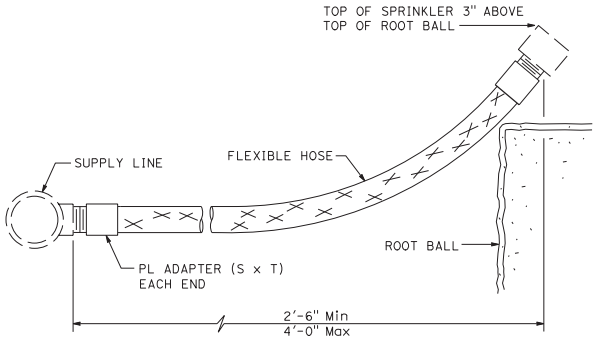

ELEVATION

RISER TYPE V

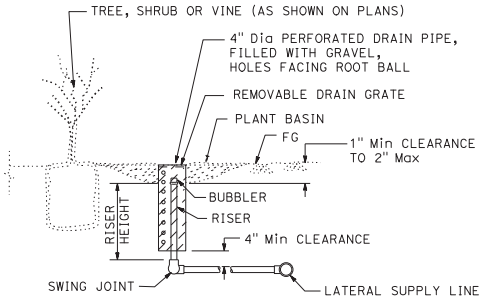

SECTION

TREE WELL SPRINKLER ASSEMBLY

STATE OF CALIFORNIA
DEPARTMENT OF TRANSPORTATION

LANDSCAPE DETAILS (SPRINKLER ASSEMBLY)

NO SCALE

RSP H4 DATED APRIL 19, 2019 SUPERSEDES STANDARD PLAN H4
DATED MAY 31, 2018 - PAGE 269 OF THE STANDARD PLANS BOOK DATED 2018.

REVISED STANDARD PLAN RSP H4

2018 REVISED STANDARD PLAN RSP H4

12-3-18

© 2019 California Department of Transportation
All Rights Reserved

Dist	COUNTY	ROUTE	POST MILES TOTAL PROJECT	SHEET No.	TOTAL SHEETS

LICENSED LANDSCAPE ARCHITECT

April 19, 2019
PLANS APPROVAL DATE

THE STATE OF CALIFORNIA OR ITS OFFICERS OR AGENTS SHALL NOT BE RESPONSIBLE FOR THE ACCURACY OR COMPLETENESS OF SCANNED COPIES OF THIS PLAN SHEET.

LICENSED LANDSCAPE ARCHITECT
Michael V. Ferrara 3809
Signature
9-30-19
Renewal Date
Date
STATE OF CALIFORNIA

TO ACCOMPANY PLANS DATED _____

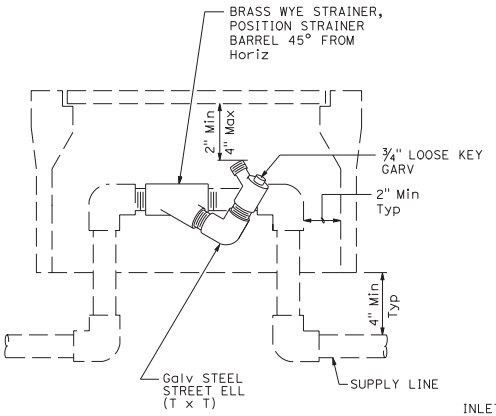

ELEVATION
WYE STRAINER ASSEMBLY

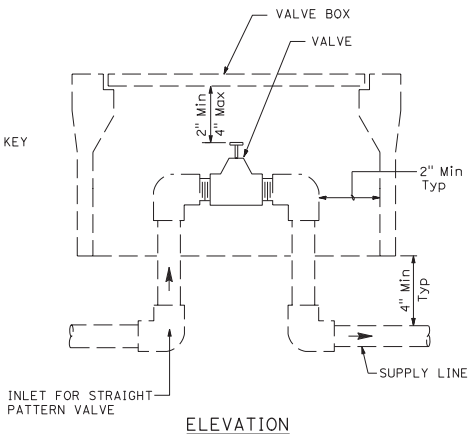

ELEVATION
VALVE

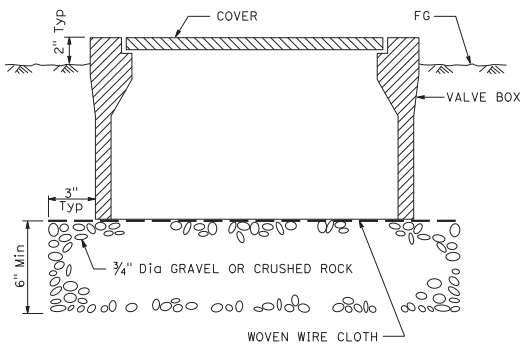

SECTION
VALVE BOX

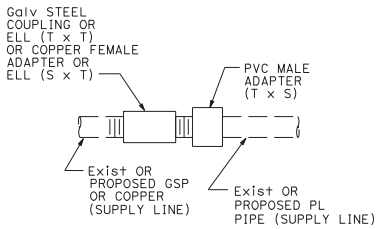

GALVANIZED OR COPPER PIPE
CONNECTION TO PLASTIC PIPE

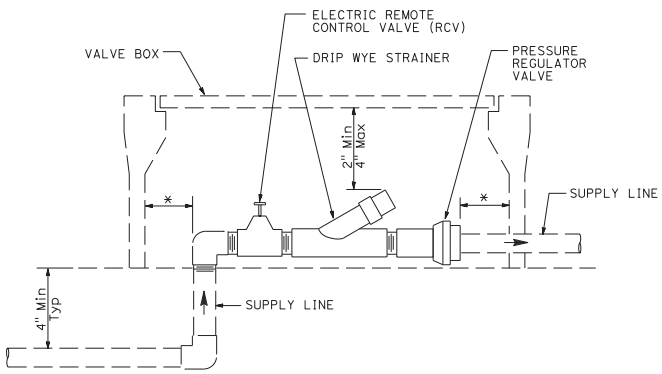

* 2" CLEARANCE ON ALL SIDES

ELEVATION
DRIP VALVE ASSEMBLY

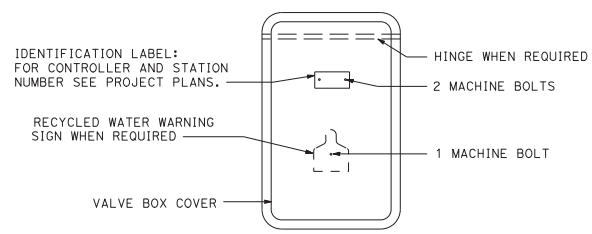

PLAN

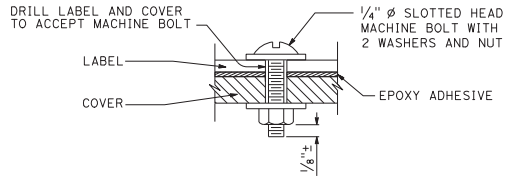

SECTION
VALVE BOX IDENTIFICATION

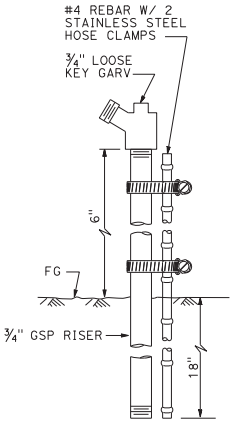

ELEVATION
GARDEN VALVE ASSEMBLY

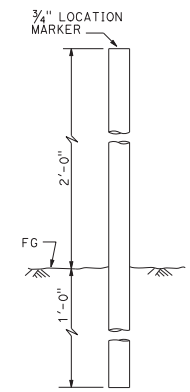

ELEVATION
LOCATION MARKER

GARDEN VALVE ASSEMBLY

STATE OF CALIFORNIA
DEPARTMENT OF TRANSPORTATION

LANDSCAPE DETAILS

NO SCALE

RSP H6 DATED APRIL 19, 2019 SUPERSEDES STANDARD PLAN H6
DATED MAY 31, 2018 - PAGE 271 OF THE STANDARD PLANS BOOK DATED 2018.

REVISED STANDARD PLAN RSP H6

2018 REVISED STANDARD PLAN RSP H6

10-31-18

© 2019 California Department of Transportation
All Rights Reserved

Dist	COUNTY	ROUTE	POST MILES TOTAL PROJECT	SHEET No.	TOTAL SHEETS

LICENSED LANDSCAPE ARCHITECT

April 19, 2019
PLANS APPROVAL DATE

THE STATE OF CALIFORNIA OR ITS OFFICERS OR AGENTS SHALL NOT BE RESPONSIBLE FOR THE ACCURACY OR COMPLETENESS OF SCANNED COPIES OF THIS PLAN SHEET.

LICENSED LANDSCAPE ARCHITECT — Stephen T. Ferrone, 5880 — Signature — 9-30-19 Renewal Date — Date — STATE OF CALIFORNIA

TO ACCOMPANY PLANS DATED _____

* WHEN USED WITH RECYCLED WATER REPLACE GSP PIPE FITTINGS WITH PVC AND COUPLING.

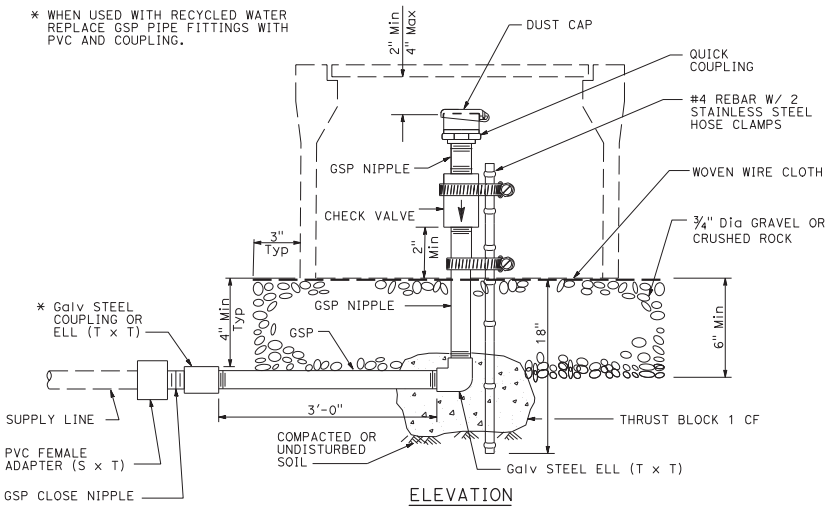

ELEVATION

QUICK COUPLING VALVE

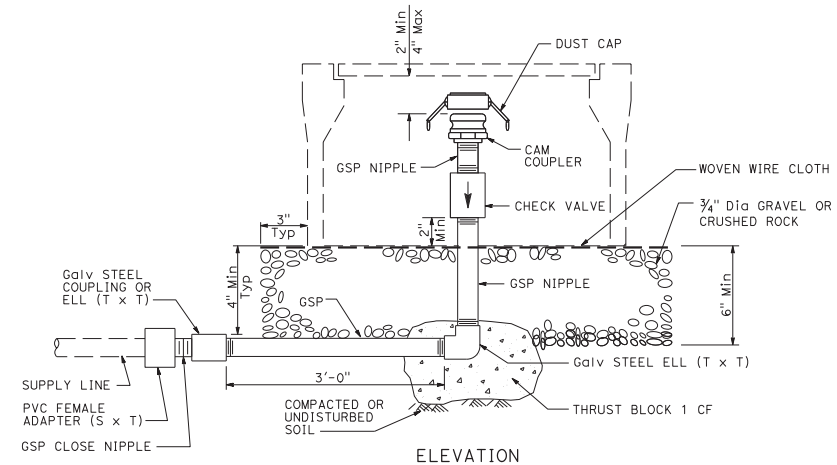

ELEVATION

CAM COUPLER ASSEMBLY

NOTES:

1. 40" - 50"
2. 12" downstream of RCV
   18" upstream of RCV

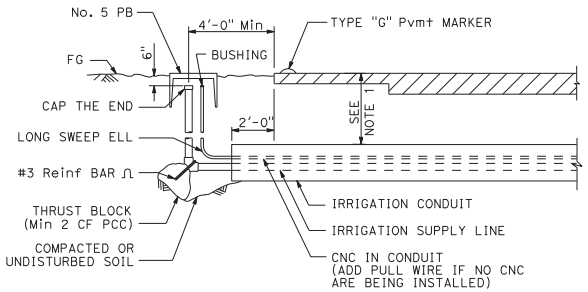

SECTION

IRRIGATION CONDUIT

UNDER TRAVELED WAY

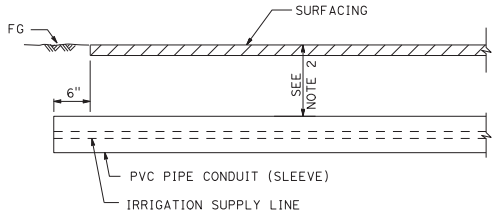

SECTION

PVC PIPE CONDUIT (SLEEVE)

UNDER SIDEWALKS, DRIVEWAYS PAVEMENT, SLOPE PAVING, PAVED DITCHES AND PATHS

STATE OF CALIFORNIA
DEPARTMENT OF TRANSPORTATION

LANDSCAPE DETAILS

NO SCALE

RSP H8 DATED APRIL 19, 2019 SUPERSEDES STANDARD PLAN H8
DATED MAY 31, 2018 - PAGE 273 OF THE STANDARD PLANS BOOK DATED 2018.

REVISED STANDARD PLAN RSP H8

2018 REVISED STANDARD PLAN RSP H8

12-3-18

© 2020 California Department of Transportation
All Rights Reserved

Dist	COUNTY	ROUTE	POST MILES TOTAL PROJECT	SHEET No.	TOTAL SHEETS

LICENSED LANDSCAPE ARCHITECT

October 16, 2020
PLANS APPROVAL DATE

THE STATE OF CALIFORNIA OR ITS OFFICERS OR AGENTS SHALL NOT BE RESPONSIBLE FOR THE ACCURACY OR COMPLETENESS OF SCANNED COPIES OF THIS PLAN SHEET.

LICENSED LANDSCAPE ARCHITECT
Michael V. Ferrara 3809
Signature
9-30-21
Renewal Date
Date
STATE OF CALIFORNIA

TO ACCOMPANY PLANS DATED _____

NOTES:

1. 12" downstream of RCV
   18" upstream of RCV
2. Width sufficent to allow snaking of pipe and CNC bundles without stacking.
3. 1 ft minimum to back of sidewalk.
4. 2" Min or Dia of largest pipe in trench.

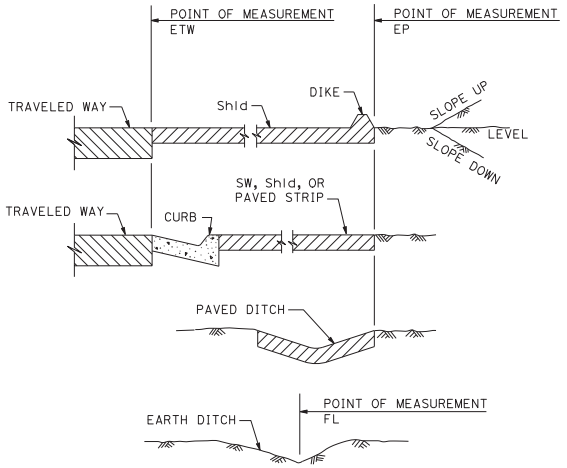

SECTION
POINTS OF MEASUREMENT

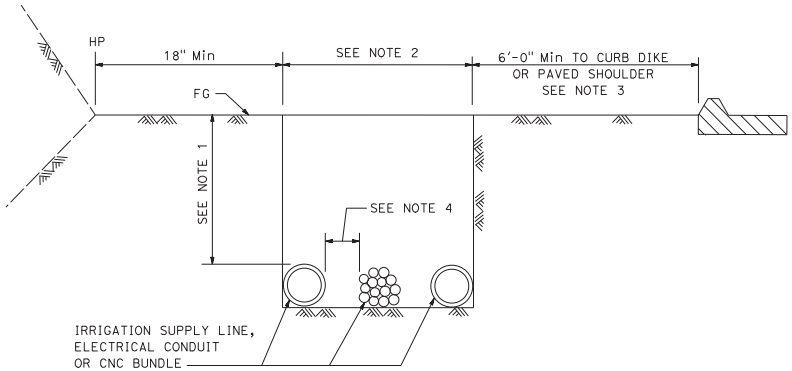

SECTION
IRRIGATION TRENCH DETAIL

STATE OF CALIFORNIA
DEPARTMENT OF TRANSPORTATION

LANDSCAPE DETAILS

NO SCALE

RSP H9 DATED OCTOBER 16, 2020 SUPERSEDES STANDARD PLAN H9
DATED MAY 31, 2018 - PAGE 274 OF THE STANDARD PLANS BOOK DATED 2018.

REVISED STANDARD PLAN RSP H9

2018 REVISED STANDARD PLAN RSP H9

3-17-20

© 2019 California Department of Transportation
All Rights Reserved

Dist	COUNTY	ROUTE	POST MILES TOTAL PROJECT	SHEET No.	TOTAL SHEETS

LICENSED LANDSCAPE ARCHITECT

October 18, 2019
PLANS APPROVAL DATE

THE STATE OF CALIFORNIA OR ITS OFFICERS OR AGENTS SHALL NOT BE RESPONSIBLE FOR THE ACCURACY OR COMPLETENESS OF SCANNED COPIES OF THIS PLAN SHEET.

LICENSED LANDSCAPE ARCHITECT
Michael V. Ferrara 3859
Signature
9-30-21
Renewal Date
Date
STATE OF CALIFORNIA

TO ACCOMPANY PLANS DATED _____

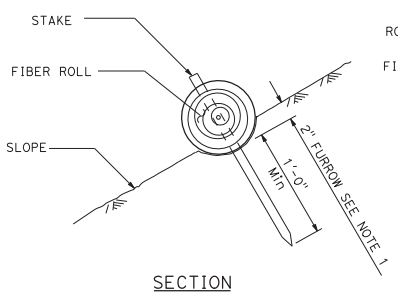

SECTION

FIBER ROLL (TYPE 1)

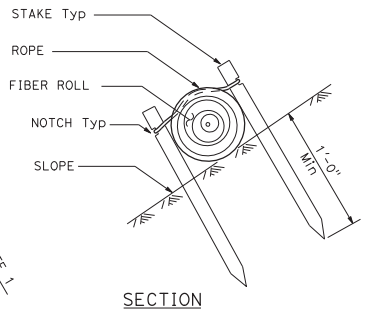

SECTION

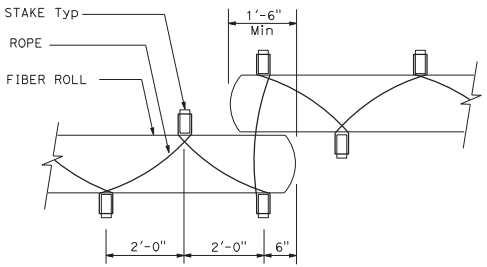

PLAN

FIBER ROLL (TYPE 2)

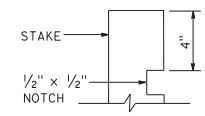

ELEVATION

STAKE NOTCH DETAIL

NOTE:

1. Installations shown in the perspectives are for slope inclination of 10:1 (Horiz:Vert) and steeper.

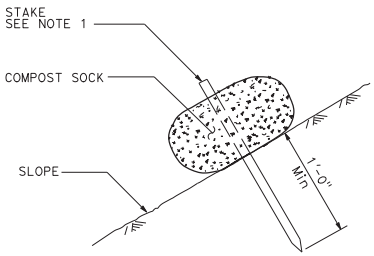

SECTION

COMPOST SOCK

NOTE:

1. May install stake adjacent to bottom edge of compost sock.

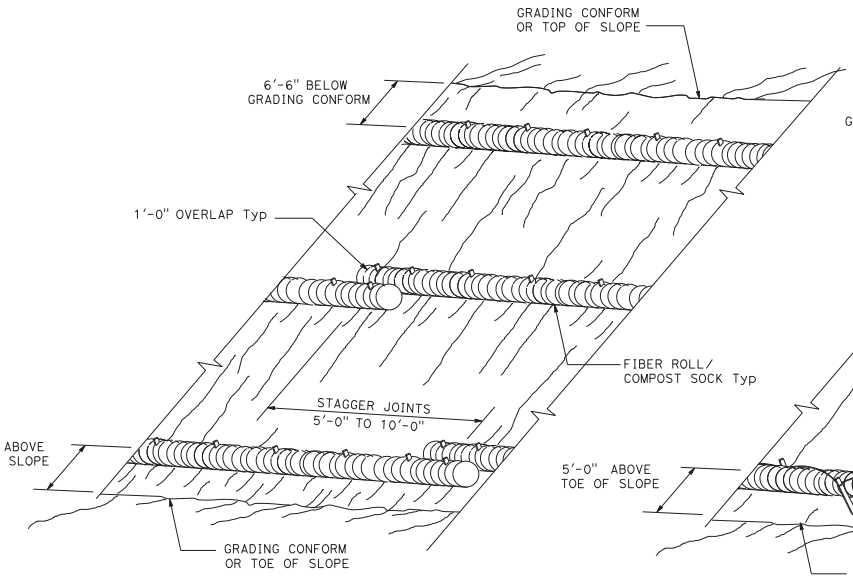

PERSPECTIVE

FIBER ROLL (TYPE 1)
COMPOST SOCK

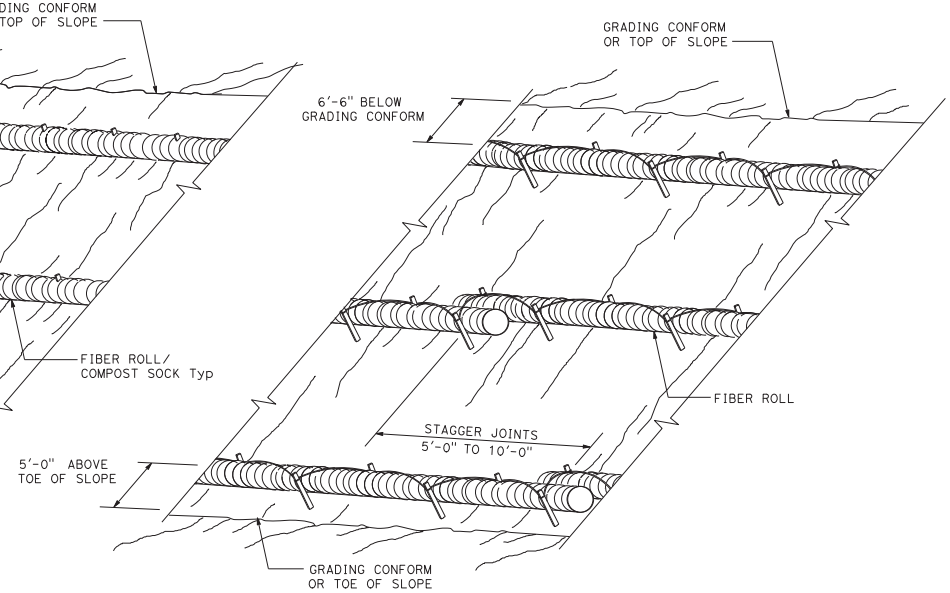

PERSPECTIVE

FIBER ROLL (TYPE 2)

STATE OF CALIFORNIA
DEPARTMENT OF TRANSPORTATION

EROSION CONTROL DETAILS
FIBER ROLL AND COMPOST SOCK

NO SCALE

RSP H51 DATED OCTOBER 18, 2019 SUPERSEDES STANDARD PLAN H51
DATED MAY 31, 2018 - PAGE 276 OF THE STANDARD PLANS BOOK DATED 2018.

REVISED STANDARD PLAN RSP H51

2018 REVISED STANDARD PLAN RSP H51

5-16-19

© 2019 California Department of Transportation
All Rights Reserved

Dist	COUNTY	ROUTE	POST MILES TOTAL PROJECT	SHEET No.	TOTAL SHEETS

Dulce Rufino Feldman
REGISTERED CIVIL ENGINEER
October 18, 2019
PLANS APPROVAL DATE
THE STATE OF CALIFORNIA OR ITS OFFICERS OR AGENTS SHALL NOT BE RESPONSIBLE FOR THE ACCURACY OR COMPLETENESS OF SCANNED COPIES OF THIS PLAN SHEET.

REGISTERED PROFESSIONAL ENGINEER — Dulce Rufino Feldman — No. C81459 — Exp. 9-30-21 — CIVIL — STATE OF CALIFORNIA

TO ACCOMPANY PLANS DATED _____

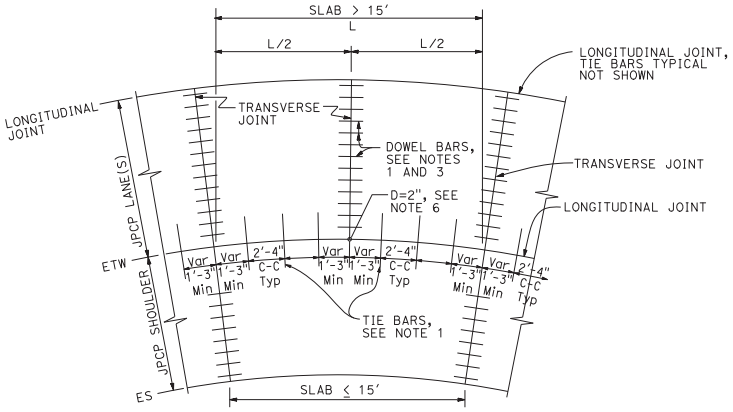

TIE BAR LAYOUT IN CURVED LANES

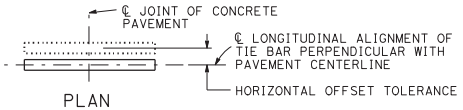

PLAN

HORIZONTAL OFFSET TOLERANCE

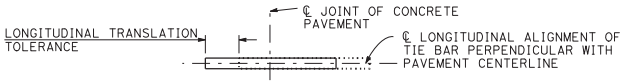

PLAN

LONGITUDINAL TRANSLATION TOLERANCE

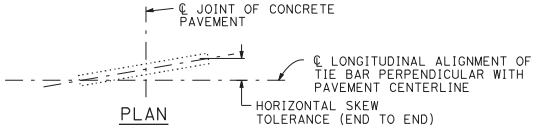

PLAN

HORIZONTAL SKEW TOLERANCE

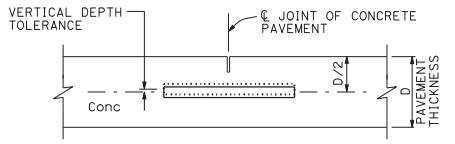

ELEVATION

VERTICAL DEPTH TOLERANCE

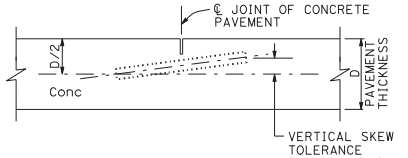

ELEVATION

VERTICAL SKEW TOLERANCE

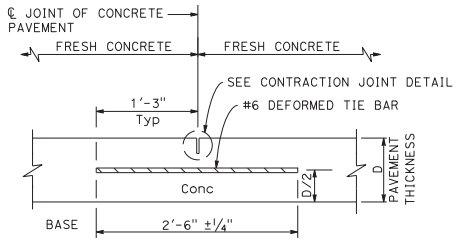

LONGITUDINAL CONTRACTION JOINT

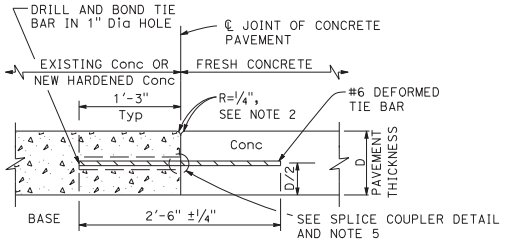

LONGITUDINAL CONSTRUCTION JOINT

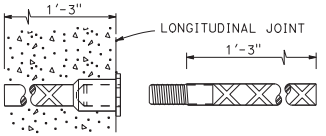

ALTERNATIVE SPLICE COUPLER

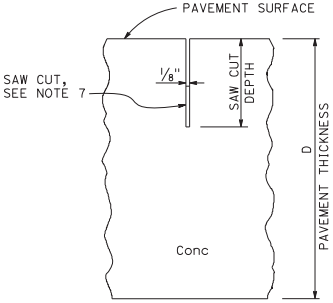

CONTRACTION JOINT DETAIL

NOTES:

1. See Standard Plan P1 for typical dowel bar and tie bar placement and locations.
2. Where new pavement is placed against existing concrete pavement, rounding the corner is not required.
3. For dowel bar sizes, See Standard Plan P10.
4. Tie bar details apply to inside widenings.
5. Use either drill and bond or splice couplers.
6. Full depth drilled hole. Fill hole with filler material.
7. The bottom of the saw cut must be at least 0.5" clear of any dowel bar, tie bar and bar reinforcement.

STATE OF CALIFORNIA
DEPARTMENT OF TRANSPORTATION

CONCRETE PAVEMENT- TIE BAR DETAILS

NO SCALE

RSP P15 DATED OCTOBER 18, 2019 SUPERSEDES STANDARD PLAN P15
DATED MAY 31, 2018 - PAGE 168 OF THE STANDARD PLANS BOOK DATED 2018.

REVISED STANDARD PLAN RSP P15

6-21-19

2018 REVISED STANDARD PLAN RSP P15

© 2018 California Department of Transportation
All Rights Reserved

Dist	COUNTY	ROUTE	POST MILES TOTAL PROJECT	SHEET No.	TOTAL SHEETS

REGISTERED CIVIL ENGINEER

October 19, 2018
PLANS APPROVAL DATE

REGISTERED PROFESSIONAL ENGINEER — Juan J. Jauregui — No. C63939 — Exp. 9-30-20 — CIVIL — STATE OF CALIFORNIA

THE STATE OF CALIFORNIA OR ITS OFFICERS OR AGENTS SHALL NOT BE RESPONSIBLE FOR THE ACCURACY OR COMPLETENESS OF SCANNED COPIES OF THIS PLAN SHEET.

TO ACCOMPANY PLANS DATED _____

INSTRUCTIONS TO FABRICATOR

PROJECT PLANS SHOW:

1. Sign structure location.
2. Length of structure frame.
3. Panel size and locations on structure.
4. Walkway length for two post signs.
5. Post type and height to bottom of frame.
6. Base plate elevation.
7. Footing elevation or location of pile foundation.
8. Photoelectric unit location if required.

REFER TO THE FOLLOWING STANDARD PLANS FOR DETAILS NOT SHOWN ON PROJECT PLANS:

Sheet No.	SHEET NAME
S1	Overhead Signs-Truss, Instructions and Examples
S2	Overhead Signs-Truss, Single Post Type, Post Types II to IX
S3	Overhead Signs-Truss, Single Post Type, Base Plate and Anchorage Details
S4	Overhead Signs-Truss, Single Post Type, Structural Frame Members Details No. 1
S5	Overhead Signs-Truss, Single Post Type, Structural Frame Members Details No. 2
S6	Overhead Signs-Truss, Gusset Plate Details
S8	Overhead Signs-Truss, Single Post Type, Round Pedestal Pile Foundation
S9	Overhead Signs-Truss, Two Post Type, Post Types I-S through VIII-S
S10	Overhead Signs-Truss, Two Post Type, Base Plate and Anchorage Details
S11	Overhead Signs-Truss, Two Post Type, Structural Frame Members
S12	Overhead Signs-Truss, Structural Frame Details
S13	Overhead Signs-Truss, Frame Juncture Details
S15	Overhead Signs-Truss, Two Post Type, Round Pedestal Pile Foundation
S16	Overhead Signs, Walkway Details No. 1
S17	Overhead Signs, Walkway Details No. 2
S17A	Overhead Signs, Walkway Details No. 3
S18	Overhead Signs, Walkway Safety Railing Details
S19	Overhead Signs-Truss, Sign Mounting Details, Laminated Panel-Type A
S20	Overhead Signs, Steel Frames, Removable Sign Panel Frames
S21	Overhead Signs, Removable Sign Panel Frames, Mounting Details
S22	Overhead Signs-Truss, Removable Sign Panel Frames, 9'-2" and 10'-0" Sign Panels

WALKWAY BRACKETS:

Space all walkway brackets maintaining uniform spacing where possible. Maximum spacing shall not exceed 5'-6".

OVERHEAD SIGN LUMINAIRE MOUNTING CHANNELS:

Where distance from walkway bracket to end of sign panel exceeds 1'-4", extend overhead sign luminaire mounting channels to next walkway bracket. See Example No. 2.

WALKWAY AND SAFETY RAILING:

Walkway to be continuous for entire length of frame for single post signs. For two post signs, see Project Plans. Safety railing to protect entire walkway, but continuous for no more than 11'-0" in one unit.

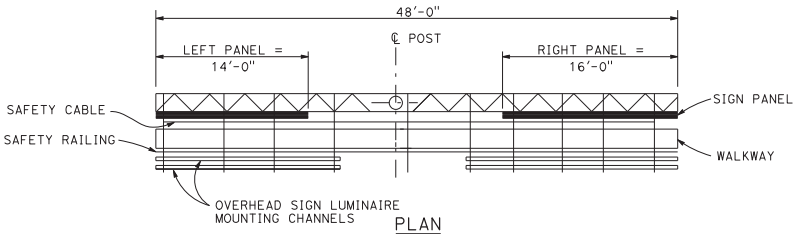

PLAN

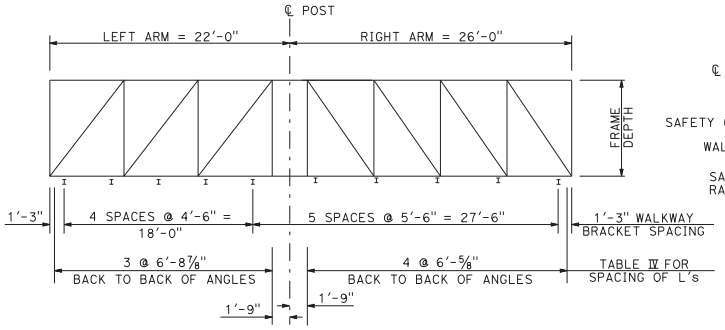

ELEVATION

UNBALANCED SINGLE POST TYPE

Example No. 1

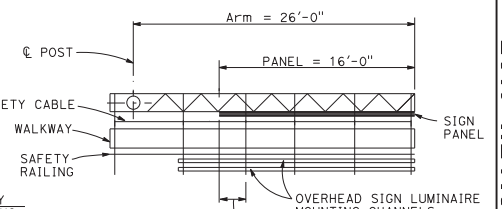

PLAN

CANTILEVER SINGLE POST TYPE

Example No. 2

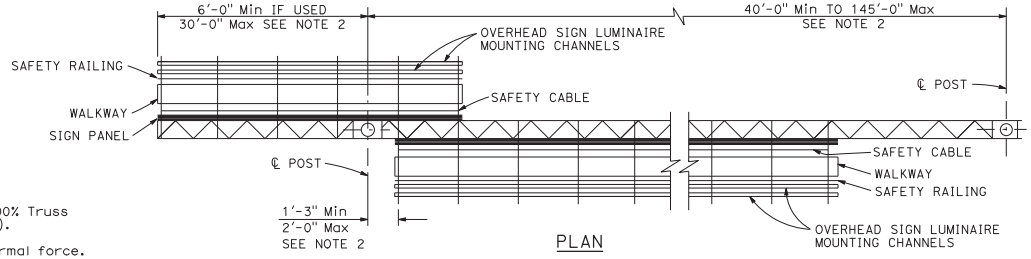

PLAN

TWO POST TYPE WITH CANTILEVER (PART DOUBLE-FACED)

Example No. 3

GENERAL NOTES:

LOADING:

WIND LOADING:

Normal to face of sign: 40.3 psf on 100% Truss surface area (i.e. 100% panel coverage).

Transverse to face of sign: 20% of normal force.

WALKWAY LOADING:

Dead load +500 LB concentrated live load.

UNIT STRESSES:

STRUCTURAL STEEL: fy = 36,000 psi
REINFORCED CONCRETE: fy = 60,000 psi
f'c = 3600 psi
FOOTING SOIL PRESSURE: 2.5 ksf (spread footing)

MINIMUM CLEARANCE

Vertical roadway clearance 18'-0" (bottom of walkway system)

WELDING:

All welding continuous unless otherwise noted on the plans.

NOTES:

1. Signs are shown and dimensioned looking in the direction of traffic. Double faced signs are shown and dimensioned looking ahead along stationing.
2. Mandatory dimension limit.

STATE OF CALIFORNIA
DEPARTMENT OF TRANSPORTATION

OVERHEAD SIGNS-TRUSS INSTRUCTIONS AND EXAMPLES

NO SCALE

RSP S1 DATED OCTOBER 19, 2018 SUPERSEDES STANDARD PLAN S1
DATED MAY 31, 2018 - PAGE 409 OF THE STANDARD PLANS BOOK DATED 2018.

REVISED STANDARD PLAN RSP S1

2018 REVISED STANDARD PLAN RSP S1

5-8-18

© 2018 California Department of Transportation
All Rights Reserved

Dist	COUNTY	ROUTE	POST MILES TOTAL PROJECT	SHEET No.	TOTAL SHEETS

REGISTERED CIVIL ENGINEER

October 19, 2018
PLANS APPROVAL DATE

REGISTERED PROFESSIONAL ENGINEER — Juan J. Jauregui — No. C63939 — Exp. 9-30-20 CIVIL — STATE OF CALIFORNIA

THE STATE OF CALIFORNIA OR ITS OFFICERS OR AGENTS SHALL NOT BE RESPONSIBLE FOR THE ACCURACY OR COMPLETENESS OF SCANNED COPIES OF THIS PLAN SHEET.

TO ACCOMPANY PLANS DATED _____

TABLE XV

POST TYPE	PIPE		CAP PLATE SIZE FOR CHORD L's 5 x 5	CAP PLATE SIZE FOR CHORD L's 6 x 6	ROUND PEDESTAL					SQUARE PEDESTAL						SPREAD FOOTING						
						VERTICAL J-BARS		SPIRAL			VERTICAL J-BARS			HOOP		(SEE NOTE 2)	REINFORCEMENT					
																	WIDTH		LONGITUDINAL		FOOTING STIRRUPS	
	NPS	THICKNESS			PEDESTAL SIZE Dia	EQUALLY SPACED TOTAL	BAR SIZE	BAR SIZE	PITCH	PEDESTAL SIZE SQUARE	EQUALLY SPACED TOTAL	BAR SIZE	# OF BARS EA FACE	BAR SIZE	SPACING		TOP	BOTTOM	TOP	BOTTOM		
II	14	1/2"	2'-0" x 2'-0" x 1"	2'-2" x 2'-2" x 1"	5'-3"	16	#10	#5	3 1/2"	5'-3"	16	#10	5	#5	3 1/2"	12'-0" x 14'-0" x 2'-6"	14-#6	14-#7	13-#9	13-#9	#5 @ 12	
III	16		2'-2" x 2'-2" x 1"	2'-4" x 2'-4" x 1"												12'-0" x 14'-0" x 2'-6"	15-#6	15-#7				
IV	18		2'-4" x 2'-4" x 1"	2'-6" x 2'-6" x 1"												12'-0" x 14'-0" x 2'-6"	15-#6	15-#7				
V	20		2'-6" x 2'-6" x 1"	2'-8" x 2'-8" x 1"												13'-0" x 14'-0" x 2'-6"	15-#6	15-#7	14-#9	14-#9		
VI	24		2'-10" x 2'-10" x 1"	3'-0" x 3'-0" x 1"	5'-9"		#11			5'-9"		#11				13'-0" x 16'-0" x 2'-6"	17-#7	17-#7		14-#11		
VII	24	3/4"														13'-0" x 17'-0" x 2'-6"	18-#7	18-#7				
VIII	24	31/32"														13'-0" x 18'-0" x 2'-6"	19-#7	19-#7				
IX	24	31/32"														13'-0" x 18'-0" x 2'-6"	19-#7	19-#7				

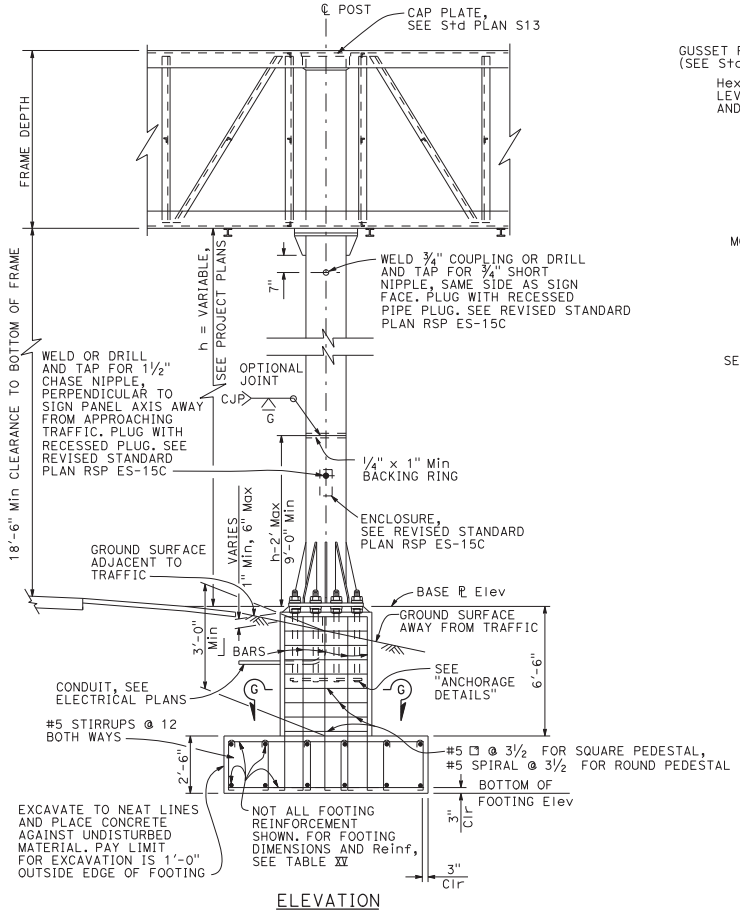

ELEVATION
See Note 5

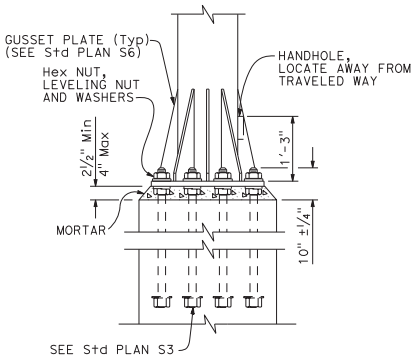

ELEVATION

ANCHORAGE DETAILS

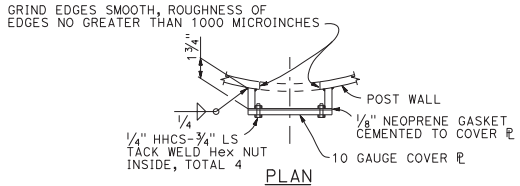

PLAN

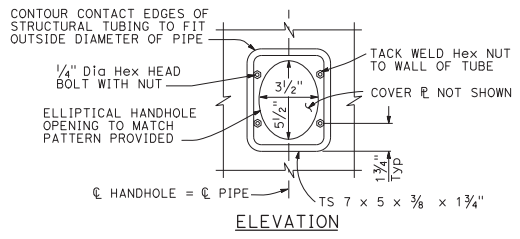

ELEVATION

TYPICAL DETAILS OF HANDHOLE AND COVER

NOTES:

1. For "General Notes", see Revised Standard Plan RSP S1.
2. Longer side of footing (longitudinal) shall be normal to axis of sign.
3. Backfill shall be in place prior to erection of post.
4. Thread upper 10" of anchor bolts and galvanize upper 1'-0".
5. Spread footing with square pedestal foundation shown, use Pile Foundation when shown on the Project Plans. For pile foundation details, see Standard Plan S8.
6. Anchor plates may be retained with hexagon nut or formed head as alternatives to details shown.
7. On single post sign structures, the post shall be raked out of plumb, with the use of the leveling nuts to make the bottom of the sign frame level.
8. At final position of post all top and bottom nuts shall be tightened against base plate.
9. When foundation is located on a steep slope with exposed face of concrete adjacent to traffic, see "Detail C" on Standard Plan S8, as applicable.
10. Slope protection required when indicated on the Project Plans.

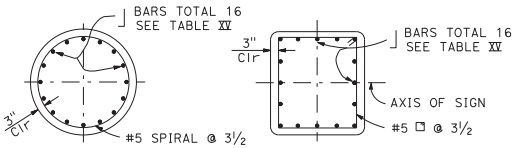

SECTION G-G
ROUND PEDESTAL

SECTION G-G
SQUARE PEDESTAL

STATE OF CALIFORNIA
DEPARTMENT OF TRANSPORTATION

OVERHEAD SIGNS-TRUSS SINGLE POST TYPE POST TYPES II THROUGH IX

NO SCALE

RSP S2 DATED OCTOBER 19, 2018 SUPERSEDES STANDARD PLAN S2
DATED MAY 31, 2018 - PAGE 410 OF THE STANDARD PLANS BOOK DATED 2018.

REVISED STANDARD PLAN RSP S2

2018 REVISED STANDARD PLAN RSP S2

7-17-18

© 2018 California Department of Transportation
All Rights Reserved

Dist	COUNTY	ROUTE	POST MILES TOTAL PROJECT	SHEET No.	TOTAL SHEETS

REGISTERED CIVIL ENGINEER

October 19, 2018
PLANS APPROVAL DATE

REGISTERED PROFESSIONAL ENGINEER
Juan J. Jauregui
No. C63939
Exp. 9-30-20
CIVIL
STATE OF CALIFORNIA

THE STATE OF CALIFORNIA OR ITS OFFICERS OR AGENTS SHALL NOT BE RESPONSIBLE FOR THE ACCURACY OR COMPLETENESS OF SCANNED COPIES OF THIS PLAN SHEET.

TO ACCOMPANY PLANS DATED _____

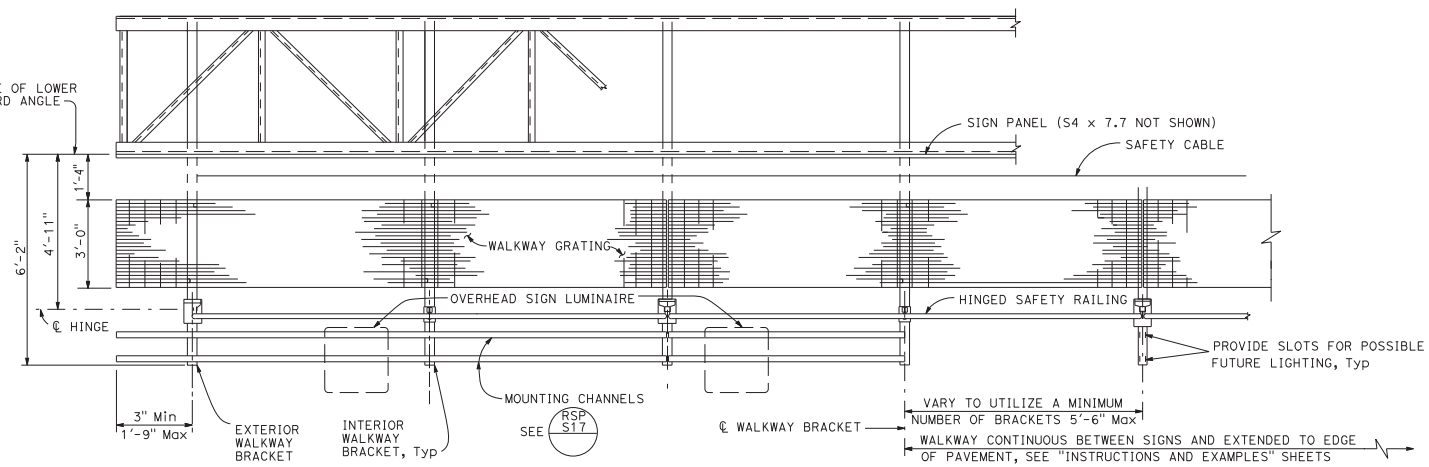

WALKWAY PLAN (TRUSS)

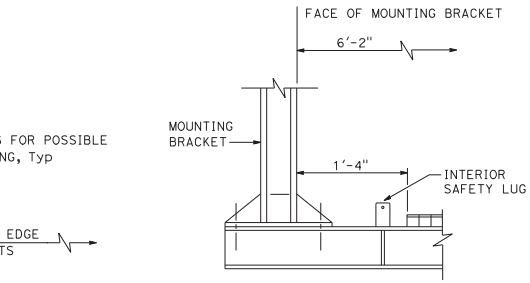

TUBULAR AND BRIDGE MOUNTED

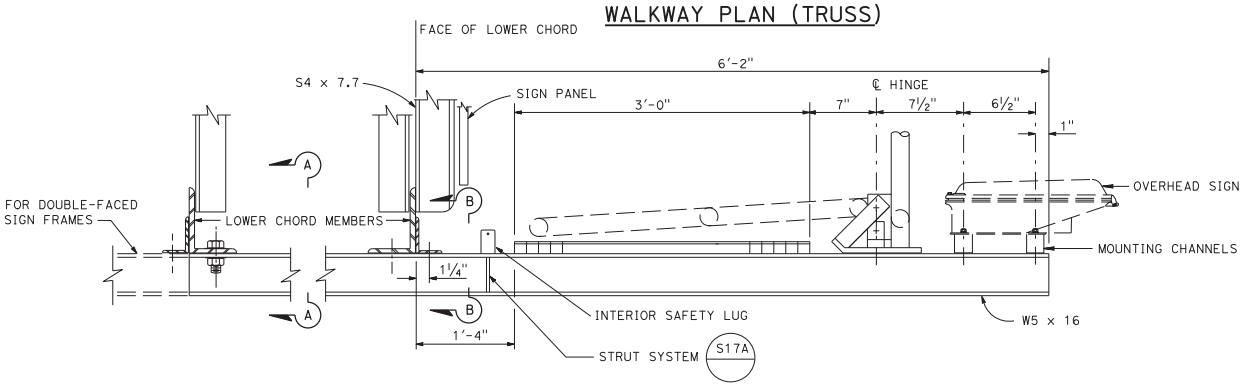

TRUSS

TYPICAL WALKWAY SECTION

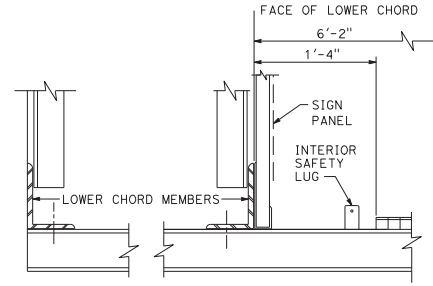

BOX BEAM
CLOSED TRUSS

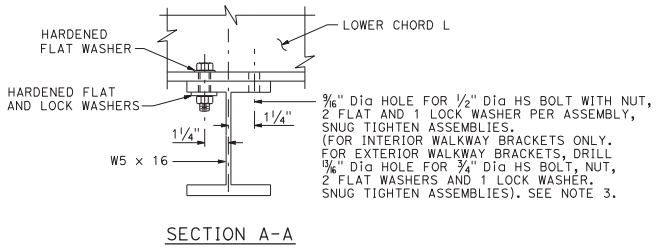

SECTION A-A

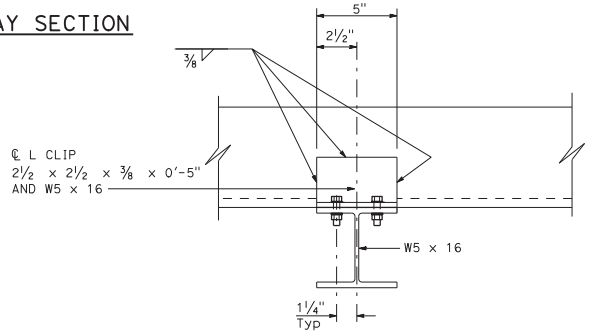

SECTION B-B

NOTES:

1. For spacing of overhead sign luminaire, see Revised Standard Plan RSP ES-15A.
2. For safety lug details, see Revised Standard Plan RSP S17.
3. For double faced sign frames with double walkways, use a total 8 bolt assemblies per bracket.

STATE OF CALIFORNIA
DEPARTMENT OF TRANSPORTATION

OVERHEAD SIGNS
WALKWAY DETAILS No. 1

NO SCALE

RSP S16 DATED OCTOBER 19, 2018 SUPERSEDES STANDARD PLAN S16 DATED MAY 31, 2018 - PAGE 422 OF THE STANDARD PLANS BOOK DATED 2018.

REVISED STANDARD PLAN RSP S16

2018 REVISED STANDARD PLAN RSP S16

5-8-18

© 2018 California Department of Transportation
All Rights Reserved

Dist	COUNTY	ROUTE	POST MILES TOTAL PROJECT	SHEET No.	TOTAL SHEETS

REGISTERED CIVIL ENGINEER

October 19, 2018
PLANS APPROVAL DATE

REGISTERED PROFESSIONAL ENGINEER — Juan J. Jauregui — No. C63939 — Exp. 9-30-20 — CIVIL — STATE OF CALIFORNIA

THE STATE OF CALIFORNIA OR ITS OFFICERS OR AGENTS SHALL NOT BE RESPONSIBLE FOR THE ACCURACY OR COMPLETENESS OF SCANNED COPIES OF THIS PLAN SHEET.

TO ACCOMPANY PLANS DATED _____

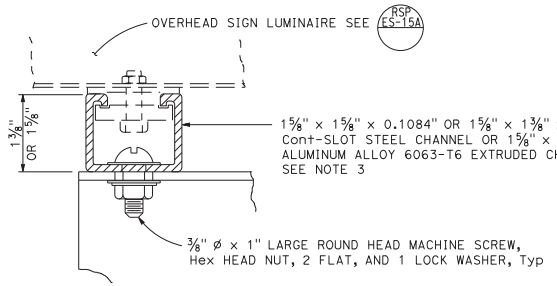

OVERHEAD SIGN LUMINAIRE MOUNTING CHANNEL DETAILS 1

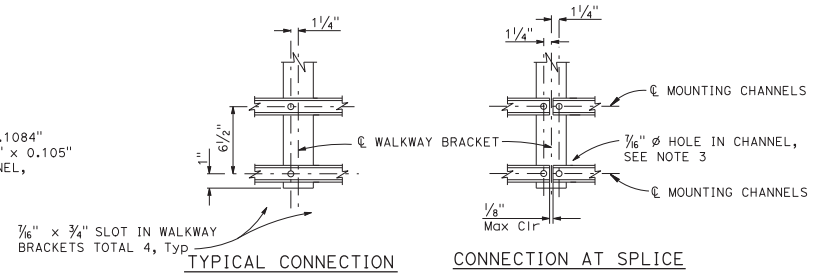

OVERHEAD SIGN LUMINAIRE MOUNTING CHANNEL DETAILS 2

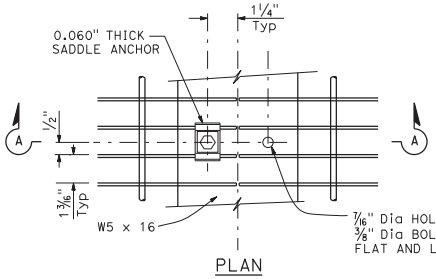

PLAN

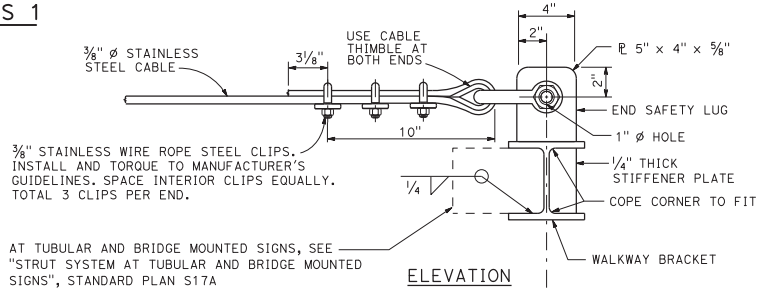

ELEVATION

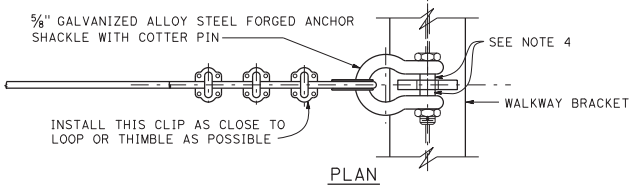

PLAN

END SAFETY CABLE DETAIL

NOTES:

1. Welded type grating shall have 1¼" x ⅛" bearing bars at 1 3/16" centers with ¼" diameter (or equal) cross bars at 4" centers. If mechanical lock grating is used, it shall be equal in strength to the welded type. Alternate hold-down clips may be submitted for approval.
2. Walkway grating and overhead sign luminaire mounting channels to be continuous (no splices) over as many walkway brackets as practical and consistent with fabrication, ease of handling and assembly.
3. Contractor may substitute 1⅝" x 1⅝" x .1084" cont-slot steel channel with pre-punched slots not larger than 11/32" x 3". Slots shall be at bottom of channel and shall be parallel to channel. Slots shall be spaced not closer than 4" center to center.
4. Place an equal amount of washers on each side to align cable with end lug without restricting shakle bolt rotation or contacting cable.

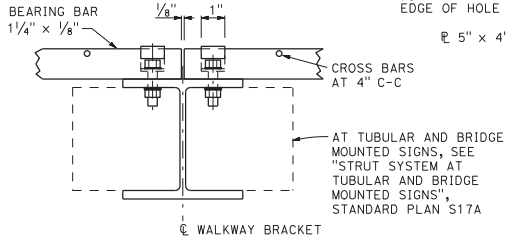

SECTION A-A

WALKWAY GRATING DETAILS

Shown at splice

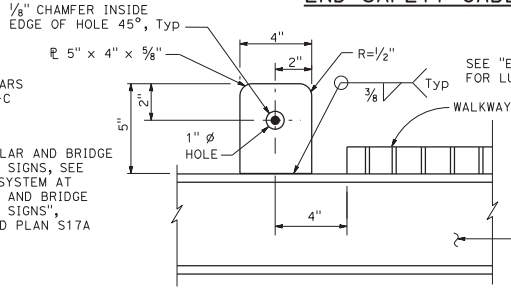

INTERIOR SAFETY LUG DETAIL

(At every walkway bracket between exterior walkway brackets)

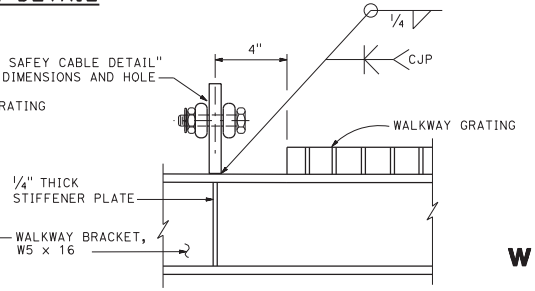

END SAFETY LUG DETAIL

(At exterior walkway brackets)

STATE OF CALIFORNIA
DEPARTMENT OF TRANSPORTATION

OVERHEAD SIGNS
WALKWAY DETAILS No. 2

NO SCALE

RSP S17 DATED OCTOBER 19, 2018 SUPERSEDES STANDARD PLAN S17 DATED MAY 31, 2018 - PAGE 423 OF THE STANDARD PLANS BOOK DATED 2018.

REVISED STANDARD PLAN RSP S17

2018 REVISED STANDARD PLAN RSP S17

5-8-18

© 2019 California Department of Transportation
All Rights Reserved

LEGEND

- TRAFFIC CONE
- TEMPORARY TRAFFIC CONTROL SIGN
- FLASHING ARROW SIGN (FAS)
- FAS SUPPORT OR TRAILER
- PORTABLE FLASHING BEACON

SIGN PANEL SIZE (Min)

- [A] 48" x 48"
- [B] 24" x 24"
- [C] 36" x 18"

NOTES:

See Standard Plan T9 for tables.

Use cone spacing X for taper segment, Y for tangent segment or Z for conflict situations, as appropriate, per Table 1, unless X, Y, or Z cone spacing is shown on this sheet.

Provide at least one person to continuously maintain traffic control devices for lane closures.

Dist	COUNTY	ROUTE	POST MILES TOTAL PROJECT	SHEET No.	TOTAL SHEETS

Atifa Ferouz
REGISTERED CIVIL ENGINEER

October 18, 2019
PLANS APPROVAL DATE

REGISTERED PROFESSIONAL ENGINEER
Atifa Ferouz
No. C80402
Exp. 3-31-21
CIVIL
STATE OF CALIFORNIA

THE STATE OF CALIFORNIA OR ITS OFFICERS OR AGENTS SHALL NOT BE RESPONSIBLE FOR THE ACCURACY OR COMPLETENESS OF SCANNED COPIES OF THIS PLAN SHEET.

TO ACCOMPANY PLANS DATED _____

TYPICAL CHANGEABLE LANE CLOSURE

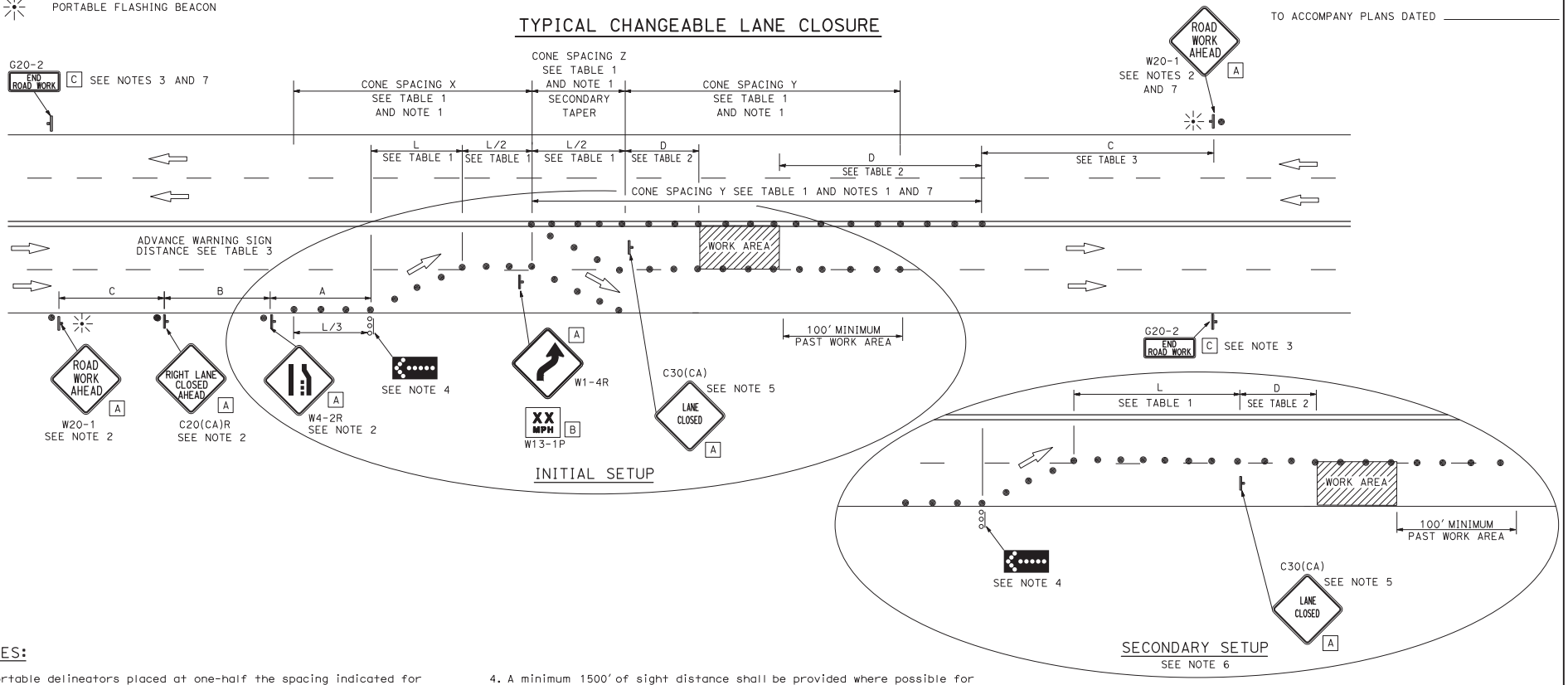

NOTES:

1. Portable delineators placed at one-half the spacing indicated for traffic cones may be used instead of cones for daytime closures only.
2. Each advance warning sign shall be equipped with at least two flags for daytime closure. Each flag shall be at least 16" x 16" in size and shall be orange or fluorescent red-orange in color. Flashing beacon shall be placed at the locations indicated for lane closure during hours of darkness.
3. A G20-2 "END ROAD WORK" sign shall be placed at the end of the lane closure unless the end of work area is obvious or ends within the larger project's limits.
4. A minimum 1500' of sight distance shall be provided where possible for vehicles approaching the first flashing arrow sign. Lane closures shall not begin at the top of crest vertical curve or on a horizontal curve.
5. Place C30(CA) "LANE CLOSED" sign at 500' to 1000' intervals throughout extended work area.
6. Relocate secondary taper to tangent location and relocate C30(CA) sign. Remove W1-4R/W13-1P sign package.
7. Sign installations and cones are not required when a median barrier is in place.

STATE OF CALIFORNIA
DEPARTMENT OF TRANSPORTATION

TRAFFIC CONTROL SYSTEM FOR CHANGEABLE LANE CLOSURE ON MULTILANE CONVENTIONAL HIGHWAYS AND EXPRESSWAYS

NO SCALE

RSP T11A DATED OCTOBER 18, 2019 SUPERSEDES STANDARD PLAN T11A DATED MAY 31, 2018 - PAGE 289 OF THE STANDARD PLANS BOOK DATED 2018.

REVISED STANDARD PLAN RSP T11A

2018 REVISED STANDARD PLAN RSP T11A

5-8-19

© 2019 California Department of Transportation
All Rights Reserved

Dist	COUNTY	ROUTE	POST MILES TOTAL PROJECT	SHEET No.	TOTAL SHEETS

Atifa Ferouz
REGISTERED CIVIL ENGINEER

April 19, 2019
PLANS APPROVAL DATE

REGISTERED PROFESSIONAL ENGINEER
Atifa Ferouz
No. C80402
Exp. 3-31-21
CIVIL
STATE OF CALIFORNIA

THE STATE OF CALIFORNIA OR ITS OFFICERS OR AGENTS SHALL NOT BE RESPONSIBLE FOR THE ACCURACY OR COMPLETENESS OF SCANNED COPIES OF THIS PLAN SHEET.

TO ACCOMPANY PLANS DATED _____

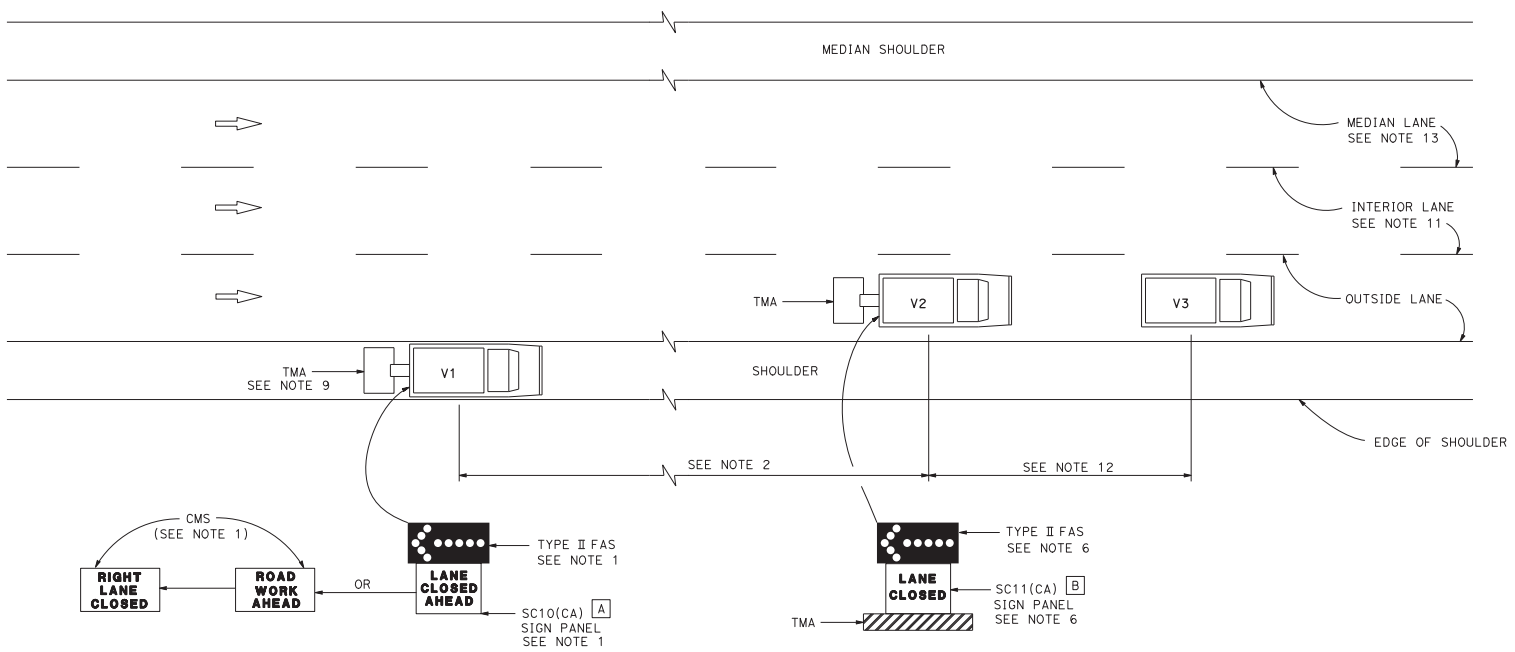

MOVING LANE CLOSURE ON MEDIAN LANE OR OUTSIDE LANE OF MULTILANE HIGHWAYS

SIGN PANEL SIZE (Min)

A 66" x 36"
B 54" x 42"

LEGEND

V1	SIGN VEHICLE
V2	SHADOW VEHICLE
V3	WORK/APPLICATION VEHICLE
	FLASHING ARROW SIGN (FAS)
CMS	CHANGEABLE MESSAGE SIGN
TMA	TRUCK-MOUNTED ATTENUATOR

NOTES:

1. Either a changeable message sign or a SC10(CA) sign panel and a Type II flashing arrow sign shall be mounted on the rear of sign vehicle V1. The changeable message sign shall be sequenced to show the "ROAD WORK AHEAD" message first, followed by the "RIGHT LANE CLOSED" message. For median lane closure, the flashing arrow symbol shall be reversed with the arrowhead on the right and the changeable message sign shall show "LEFT LANE CLOSED".
2. If traffic queues develop, sign vehicle V1 should be positioned upstream from the end of queue. Sign vehicle V1 shall be positioned where highly visible when shoulders are not available.
3. A minimum sight distance of 1500′ should be provided in advance of sign vehicle V1.
4. Sign vehicle V1 should remain at the beginning of horizontal or vertical curves until the other vehicles (V2 and V3) are far enough beyond the curve to resume the minimum sight distance of 1500′.
5. Vehicle-mounted sign panels shall have Type III or above retroreflective sheeting, black on white, or black on fluorescent orange, with 6" minimum series D letters per Caltrans sign specifications.
6. Shadow vehicle V2 shall be equipped with a truck-mounted attenuator. The sign panel shown and a Type II flashing arrow sign shall be mounted on the rear of shadow vehicle V2. For median lane closure the flashing arrow sign symbol shall be displayed with the arrowhead on the right.
7. All vehicles used for lane closures shall be equipped with two-way radios, and the vehicle operators shall maintain communication during the work or application operation.
8. All vehicles shall be equipped with flashing or rotating amber lights.
9. If sign vehicle V1 encroaches into the traffic lane due to insufficient shoulder width, sign vehicle V1 shall be equipped with a truck-mounted attenuator. Sign vehicle V1 shall stay as close to the edge of shoulder as practicable.
10. Where workers would be on foot in the work area, a stationary type lane closure (Standard Plan T10, T11, etc., as applicable) shall be used instead of this plan.
11. For moving lane closure on interior lane of multilane highways, use Standard Plan T16.
12. The spacing between work vehicle(s) and the shadow vehicles, and between each shadow vehicle should be minimized to deter road users from driving in between.
13. When the work/application vehicle V3 occupies the median lane, sign vehicle V1 should drive in the median shoulder and indicate left lane closed ahead.

STATE OF CALIFORNIA
DEPARTMENT OF TRANSPORTATION

TRAFFIC CONTROL SYSTEM FOR MOVING LANE CLOSURE ON MULTILANE HIGHWAYS

NO SCALE

RSP T15 DATED APRIL 19, 2019 SUPERSEDES STANDARD PLAN T15
DATED MAY 31, 2018 - PAGE 293 OF THE STANDARD PLANS BOOK DATED 2018.

REVISED STANDARD PLAN RSP T15

2018 REVISED STANDARD PLAN RSP T15

12-14-18

© 2020 California Department of Transportation
All Rights Reserved

Dist	COUNTY	ROUTE	POST MILES TOTAL PROJECT	SHEET No.	TOTAL SHEETS

Atifa Ferouz
REGISTERED CIVIL ENGINEER

April 17, 2020
PLANS APPROVAL DATE

REGISTERED PROFESSIONAL ENGINEER — Atifa Ferouz — No. C80402 — Exp. 3-31-21 CIVIL — STATE OF CALIFORNIA

THE STATE OF CALIFORNIA OR ITS OFFICERS OR AGENTS SHALL NOT BE RESPONSIBLE FOR THE ACCURACY OR COMPLETENESS OF SCANNED COPIES OF THIS PLAN SHEET.

TO ACCOMPANY PLANS DATED _____

NOTES:

1. Duplicate sign installations are not required:
   a) On opposite shoulder if at least one-half of the available lanes remain open to traffic.
   b) In the median if the width of the median shoulder is less than 8′ and the outside lanes are to be closed.
2. Where speed limit reduction zones are longer than 3 miles, place intermediate R2-1 sign and G20-5aP plaque at approximate 3-mile spacing throughout the speed limit reduction zone,
3. Place an R2-1 sign and G20-5aP plaque at each entrance ramp within the speed limit reduction zone.
4. The distances shown for sign spacing are approximate, are intended as guidance purposes only, and should be applied with engineering judgement. The distances should be adjusted by the Engineer for field conditions, if necessary, by increasing or decreasing the recommended distances.

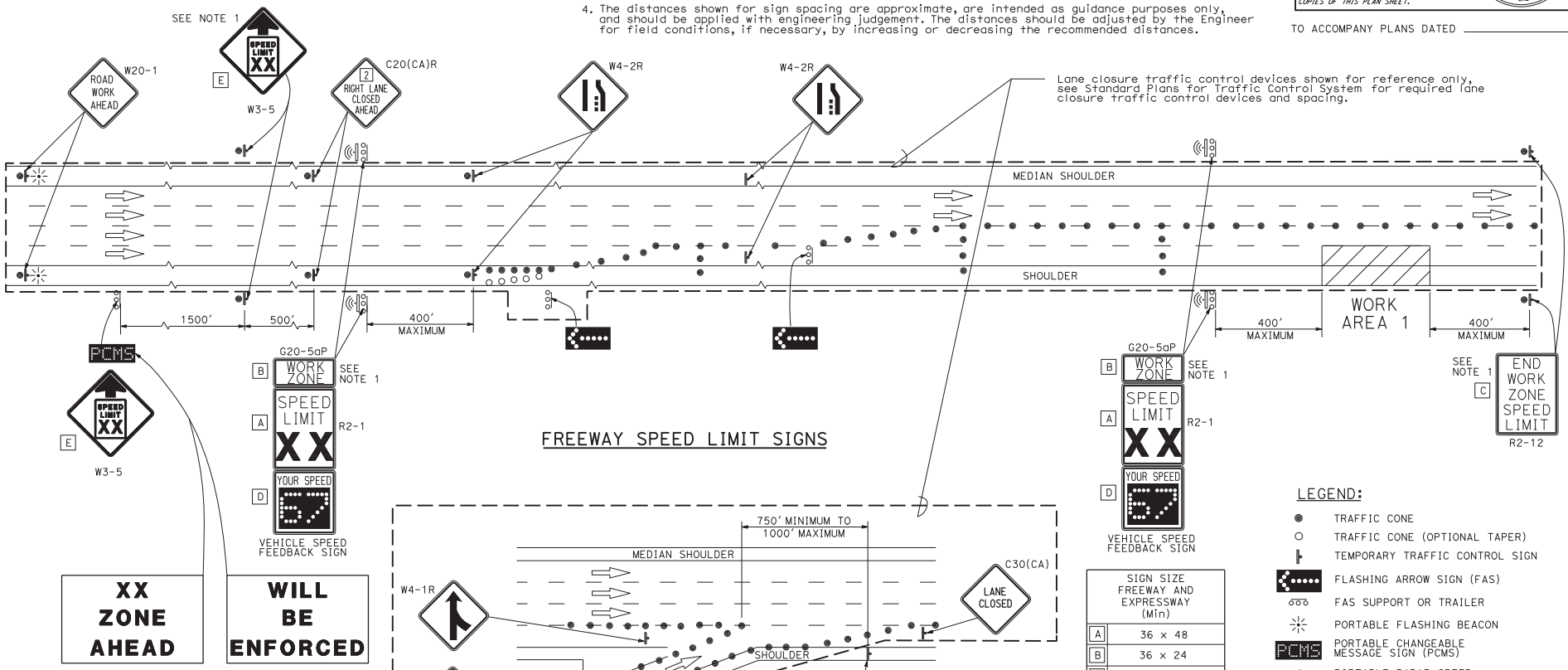

FREEWAY SPEED LIMIT SIGNS

XX ZONE AHEAD

WILL BE ENFORCED

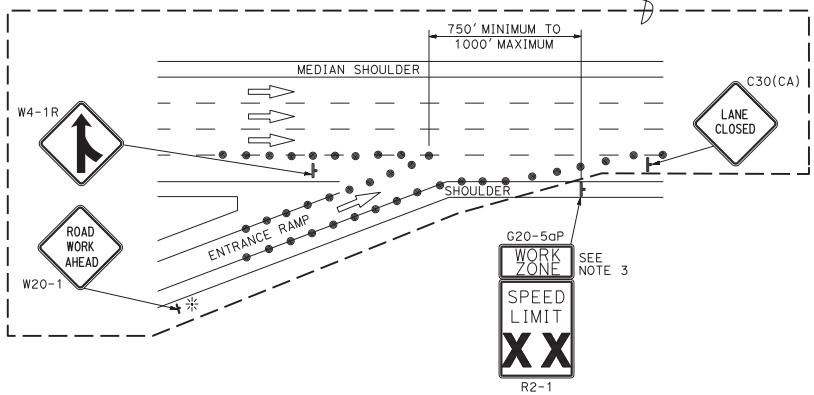

ENTRANCE RAMP SPEED LIMIT SIGN

SIGN SIZE FREEWAY AND EXPRESSWAY (Min)	
A	36 x 48
B	36 x 24
C	36 x 54
D	36 x 36
E	48 x 48

LEGEND:

- TRAFFIC CONE
- TRAFFIC CONE (OPTIONAL TAPER)
- TEMPORARY TRAFFIC CONTROL SIGN
- FLASHING ARROW SIGN (FAS)
- FAS SUPPORT OR TRAILER
- PORTABLE FLASHING BEACON
- PCMS — PORTABLE CHANGEABLE MESSAGE SIGN (PCMS)
- PORTABLE RADAR SPEED FEEDBACK SIGN SYSTEM

STATE OF CALIFORNIA
DEPARTMENT OF TRANSPORTATION

TRAFFIC CONTROL SYSTEM CONSTRUCTION WORK ZONE SPEED LIMIT REDUCTION ON FREEWAYS AND EXPRESSWAYS

NO SCALE

RSP T18 DATED APRIL 17, 2020 SUPPLEMENTS THE STANDARD PLANS BOOK DATED 2018.

REVISED STANDARD PLAN RSP T18

2018 REVISED STANDARD PLAN RSP T18

12-13-19

© 2020 California Department of Transportation
All Rights Reserved

LEGEND:

- TRAFFIC CONE
- TRAFFIC CONE (OPTIONAL TAPER)
- TEMPORARY TRAFFIC CONTROL SIGN
- FLASHING ARROW SIGN (FAS)
- FAS SUPPORT OR TRAILER
- PORTABLE FLASHING BEACON
- PCMS — PORTABLE CHANGEABLE MESSAGE SIGN (PCMS)
- PORTABLE RADAR SPEED FEEDBACK SIGN SYSTEM

	SIGN SIZE (Min)	
	FREEWAY AND EXPRESSWAY	CONVENTIONAL SINGLE LANE AND MULTILANE
A	36 x 48	24 x 30
B	36 x 24	24 x 18
C	36 x 54	24 x 36
D	36 x 36	24 x 24
E	48 x 48	48 x 48

NOTES:

1. See Standard Plan T9 for Table 3 showing advanced warning sign spacing.
2. Duplicate sign installations are not required:
   a) On opposite shoulder if at least one-half of the available lanes remain open to traffic.
   b) In the median if the width of the median shoulder is less than 8′ and the outside lanes are to be closed.
3. If the PCMS is outside the W20-1 construction area sign, place a W20-1 sign in advance of the PCMS.
4. Place the R3(CA) sign 400 feet downstream from the end of the last work area and place an additional vehicle speed feedback sign system 400 feet upstream from the beginning of each work area with a separtion of more than 2 miles.
5. The distances shown for sign spacing are approximate, are intended as guidance purposes only, and should be applied with engineering judgement. The distances should be adjusted by the Engineer for field conditions, if necessary, by increasing or decreasing the recommended distances.

Dist	COUNTY	ROUTE	POST MILES TOTAL PROJECT	SHEET No.	TOTAL SHEETS

Atifa Ferouz
REGISTERED CIVIL ENGINEER

October 16, 2020
PLANS APPROVAL DATE

REGISTERED PROFESSIONAL ENGINEER — Atifa Ferouz — No. C80402 — Exp. 3-31-21 CIVIL — STATE OF CALIFORNIA

THE STATE OF CALIFORNIA OR ITS OFFICERS OR AGENTS SHALL NOT BE RESPONSIBLE FOR THE ACCURACY OR COMPLETENESS OF SCANNED COPIES OF THIS PLAN SHEET.

TO ACCOMPANY PLANS DATED _____

Lane closure traffic control devices shown for reference only, see Standard Plans for Traffic Control System for required lane closure traffic control devices and spacing.

MULTIPLE SPEED REDUCTION STEPS WITHIN TRAFFIC CONTROL SYSTEM

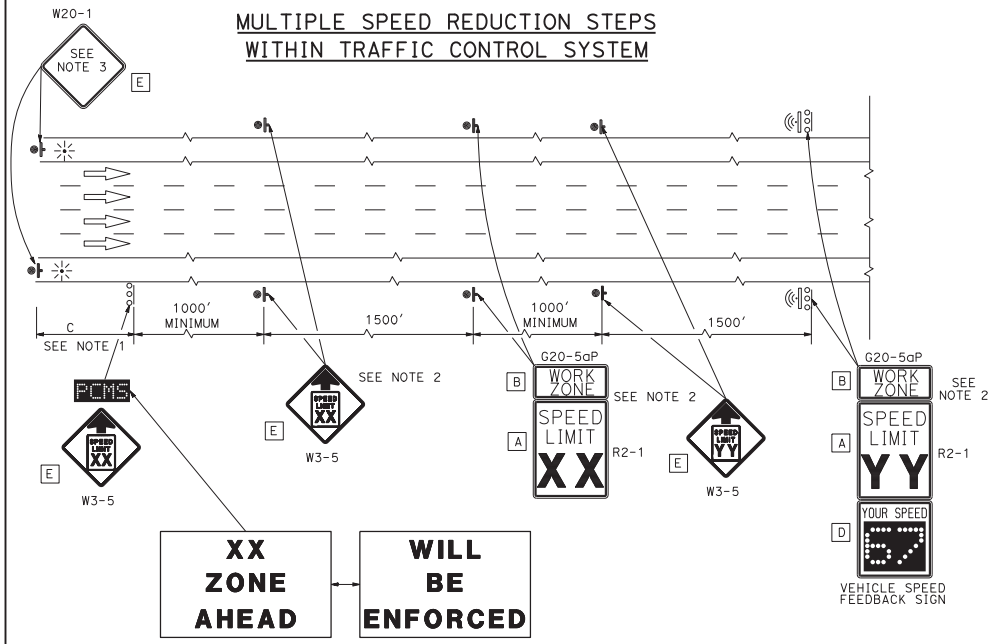

MULTIPLE WORK AREAS WITHIN TRAFFIC CONTROL SYSTEM

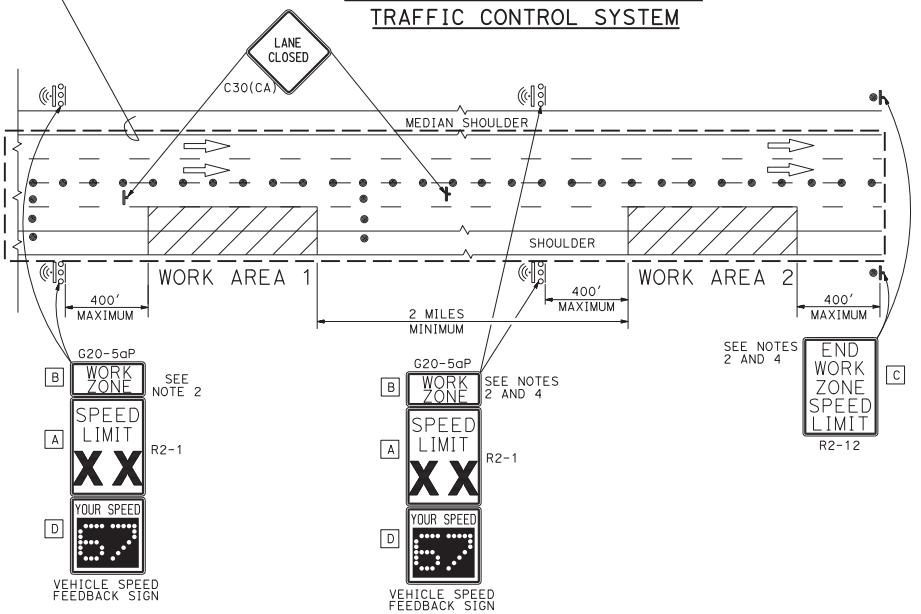

STATE OF CALIFORNIA
DEPARTMENT OF TRANSPORTATION

TRAFFIC CONTROL SYSTEM CONSTRUCTION WORK ZONE SPEED LIMIT REDUCTION DETAILS

NO SCALE

RSP T20 DATED OCTOBER 16, 2020 SUPERSEDES RSP T20 DATED APRIL 17, 2020 THAT SUPPLEMENTS THE STANDARD PLANS BOOK DATED 2018.

REVISED STANDARD PLAN RSP T20

2018 REVISED STANDARD PLAN RSP T20

5-18-20

© 2020 California Department of Transportation
All Rights Reserved

LEGEND:

- TRAFFIC CONE
- TRAFFIC CONE (OPTIONAL TAPER)
- TEMPORARY TRAFFIC CONTROL SIGN
- FLASHING ARROW SIGN (FAS)
- FAS SUPPORT OR TRAILER
- PORTABLE FLASHING BEACON
- PCMS — PORTABLE CHANGEABLE MESSAGE SIGN (PCMS)
- TEMPORARY RADAR SPEED FEEDBACK SIGN SYSTEM

	SIGN SIZE (Min)	
	FREEWAY AND EXPRESSWAY	CONVENTIONAL SINGLE LANE AND MULTILANE
A	36 x 48	24 x 30
B	36 x 24	24 x 18
C	36 x 54	24 x 36
D	36 x 36	24 x 24
E	48 x 48	48 x 48

NOTES:

1. See Standard Plan T9 for Table 3 showing advanced warning sign spacing.
2. Duplicate sign installations are not required:
   a. On opposite shoulder if at least one-half of the available lanes remain open to traffic.
   b. In the median if the width of the median shoulder is less than 8′ and the outside lanes are to be closed.
3. Place additional R2-1 sign and G20-5aP plaque:
   a. Where speed limit reduction zones are longer than 3 miles. Place intermediate sign at approximately 3-mile spacing throughout the speed limit reduction zone.
   b. At each entrance ramp within the speed limit reduction zone.
   c. Approximately 500 feet downstream from major intersections within the speed limit reduction zone.
4. Place appropriate advanced warning sign for the roadway condition that requires the construction work zone speed limit reduction.
5. Where speed limit reduction zones are longer than 3 miles, place additional appropriate advanced warning signs intermediate at approximately 3-mile spacing throughout the speed reduction zone.

Dist	COUNTY	ROUTE	POST MILES TOTAL PROJECT	SHEET No.	TOTAL SHEETS

Atifa Ferouz
REGISTERED CIVIL ENGINEER

October 16, 2020
PLANS APPROVAL DATE

REGISTERED PROFESSIONAL ENGINEER — Atifa Ferouz — No. C80402 — Exp. 3-31-21 CIVIL — STATE OF CALIFORNIA

THE STATE OF CALIFORNIA OR ITS OFFICERS OR AGENTS SHALL NOT BE RESPONSIBLE FOR THE ACCURACY OR COMPLETENESS OF SCANNED COPIES OF THIS PLAN SHEET.

TO ACCOMPANY PLANS DATED _____

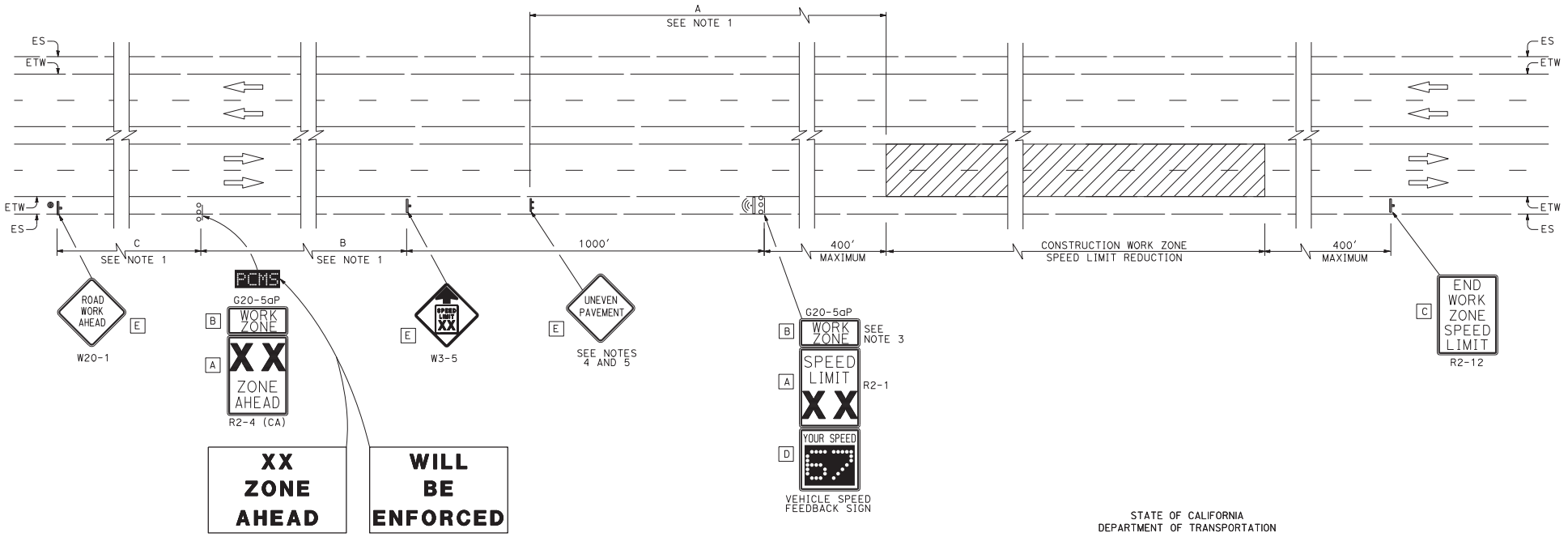

STATE OF CALIFORNIA
DEPARTMENT OF TRANSPORTATION

TRAFFIC CONTROL SYSTEM
CONSTRUCTION WORK ZONE SPEED LIMIT REDUCTION
TWENTY-FOUR HOURS A DAY 7 DAYS A WEEK (24/7)

NO SCALE
RSP T21 DATED OCTOBER 16, 2020 SUPERSEDES RSP T21 DATED APRIL 17, 2020
THAT SUPPLEMENTS THE STANDARD PLANS BOOK DATED 2018.

REVISED STANDARD PLAN RSP T21

2018 REVISED STANDARD PLAN RSP T21

5-18-20

© 2020 California Department of Transportation
All Rights Reserved

Dist	COUNTY	ROUTE	POST MILES TOTAL PROJECT	SHEET No.	TOTAL SHEETS

Charles D Suszko
REGISTERED CIVIL ENGINEER

April 17, 2020
PLANS APPROVAL DATE

REGISTERED PROFESSIONAL ENGINEER
Charles D. Suszko
No. C43029
Exp. 3-31-22
CIVIL
STATE OF CALIFORNIA

THE STATE OF CALIFORNIA OR ITS OFFICERS OR AGENTS SHALL NOT BE RESPONSIBLE FOR THE ACCURACY OR COMPLETENESS OF SCANNED COPIES OF THIS PLAN SHEET.

TO ACCOMPANY PLANS DATED _____

LEGEND:

- PORTABLE VEHICLE SPEED SENSOR
- TRAFFIC CONE
- TRAFFIC CONE (OPTIONAL TAPER)
- PORTABLE FLASHING BEACON
- SIGN
- SUPPORT OR TRAILER
- (1) LOCATION
- FLASHING ARROW SIGN
- PCMS PORTABLE CHANGEABLE MESSAGE SIGN (PCMS)

This is not part of the temporary automated end of queue warning system. See Standard Plans for Traffic Control System for lane closure components.

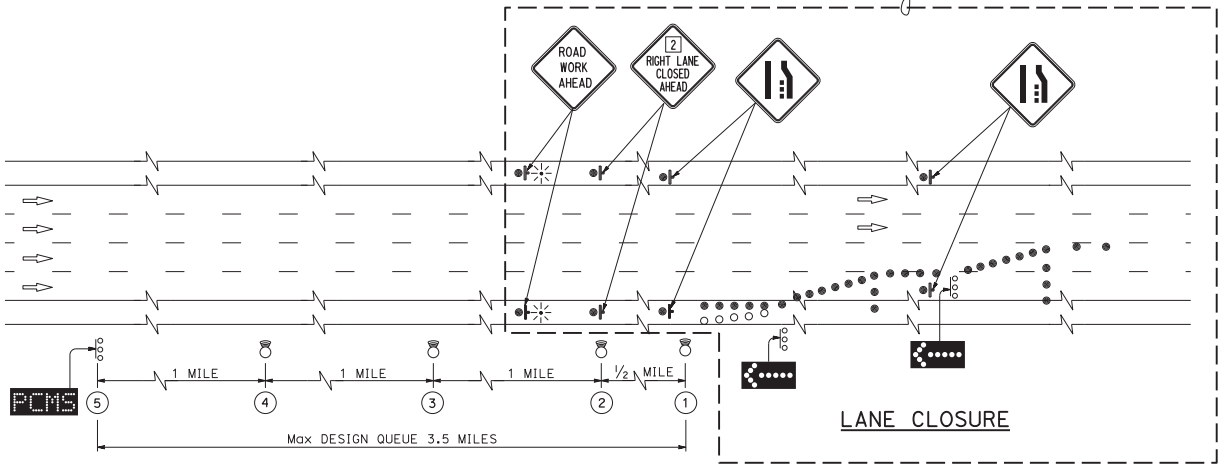

OPERATIONAL GUIDELINE FOR PCMS MESSAGES FOR POSTED SPEED LIMIT 55 MPH				
MESSAGE AT (5)	LAST 5 Min SPEED AVERAGES, V(MPH)			
	SENSOR AT (4)	SENSOR AT (3)	SENSOR AT (2)	SENSOR AT (1)
ROAD WORK AHEAD	> 45	> 45	> 45	=> 45
SLOW TRAFFIC 3 MILES	> 45	> 45	=> 45	25 < V < 45
SLOW TRAFFIC 2 MILES	> 45	=> 45	25 < V < 45	---
SLOW TRAFFIC 1 MILE	=> 45	25 < V < 45	---	---
SLOW TRAFFIC AHEAD	25 < V < 45	---	---	---
STOPPED TRAFFIC 3 MILES	> 25	> 25	> 25	<= 25
STOPPED TRAFFIC 2 MILES	> 25	> 25	<= 25	---
STOPPED TRAFFIC 1 MILE	> 25	<= 25	---	---
STOPPED TRAFFIC AHEAD	<= 25	---	---	---

For other posted speed limits adjust speeds shown on the table by adding or subtracting the calculated speed adjustment using the following formula:

Speed Adjustment = X posted speed limit - 55 mph

Add speed adjustments to speed averages.

STATE OF CALIFORNIA
DEPARTMENT OF TRANSPORTATION

TEMPORARY AUTOMATED END OF QUEUE WARNING SYSTEM TYPE 1 (QUEUE <= 3.5 MILES)

NO SCALE

RSP T26 DATED APRIL 17, 2020 SUPPLEMENTS THE STANDARD PLANS BOOK DATED 2018.

REVISED STANDARD PLAN RSP T26

2018 REVISED STANDARD PLAN RSP T26

1-8-20

APPENDIX G

CITY ENCROACHMENT PERMIT PACKET

ENCROACHMENT PERMIT PACKET

The Encroachment Permit Packet includes:

1) Application for Encroachment Permit - to be completed and submitted by:
    a. the Contractor
2) Liability Insurance Requirements and Sample Document - to be completed and submitted by:
    a. the Contractor
    b. every Subcontractor
3) City of Moreno Valley Business License (information) – to be completed and submitted by:
    a. the Contractor
    b. every Subcontractor

City of Moreno Valley

Public Works Department
Capital Projects Division
P. O. Box 88005 (14177 Frederick St)
Moreno Valley, CA 92552-0805
Phone: (951) 413-3130 Fax: (951) 413-3170
E-Mail: techinfo-capproj@moval.org

APPLICATION FOR ENCROACHMENT PERMIT

(This Application Applies to Projects Managed by the Capital Projects Division Only)

Note: No Contractor, Subcontractor, Independent Contractor or their employees may perform work within the City Right-of-Way without an encroachment permit.

City Project Number: _____

Project Name: _____

Project Location: _____

Est. Project Duration: Start (Month/Year): _____ End (Month/Year): _____

The undersigned hereby applies for a permit to work in the City Right-of-Way as follows: (Detailed description of all work to be performed under this permit)

_____

_____

_____

_____

_____

Instructions:

- ☐ *Completely fill out the Application (page 1),*
- ☐ *Complete the Contractor/Subcontractors list (pages 2 and 3),*
- ☐ *Submit Proof of Insurance for the General Contractor and all Subcontractors listed on pages 2 and 3 (the Contractor is responsible to provide its Subcontractors with the sample insurance, and to review and approve the Subcontractors insurance prior to submission to the City),*
- ☐ *Submit Proof of City of Moreno Valley Business License for the General Contractor and all Subcontractors listed on pages 2 and 3.*
- ☐ *The Traffic Control Plans, if required, have been approved by the City* *Y* ☐ *N* ☐ *N/A* ☐
  *Date of approval:*_____

In consideration of the granting of this application the **APPLICANT HEREBY AGREES TO**:

1. Indemnify, defend and save the City, its authorized agents, officers, representatives and employees, and any other entity as required per the project contract agreement, harmless from and against any and all penalties, liabilities or loss resulting from claims or court action and arising out of any accident, loss or damage to persons or property happening or occurring as a proximate result of any work undertaken under the permit granted pursuant to this application.
2. All work will be completed in conformance with the Bid Documents.

Contractor (Company): _____

By: _____ _____
(Print Name) (Sign Name)

_____
(Company Address) (City/Zip Code)

_____ _____
(Phone) (Date)

CONTRACTOR / SUBCONTRACTORS LIST

City Project Number: _____ Project Name: _____

LIST CONTRACTOR AND ALL SUBCONTRACTORS:

GENERAL CONTRACTOR (The Primary Contractor selected by the City, including all employees thereof, excluding any independent contractors)		
Company Name:		Phone #:
Company Address:		
Work to be performed by Contractor:		
Contact Name:		24 hr. Phone #:
CSLB Lic. #:	Class:	Expiration Date:
City of Moreno Valley Business License #:		Expiration Date:
Insurance – Date Submitted:		Date Approved:

SUBCONTRACTORS (An independent contractor selected by the General Contractor, including all employees thereof)		
Company Name:		Phone #:
Company Address:		
Work to be performed by Subcontractor:		
Contact Name:		24 hr. Phone #:
Date (Month/Year) Subcontractor's - Work Starts:		Work Ends:
CSLB Lic. #:	Class:	Expiration Date:
City of Moreno Valley Business License #:		Expiration Date:
Insurance – Date Submitted:		Date Approved:
Company Name:		Phone #:
Company Address:		
Work to be performed by Subcontractor:		
Contact Name:		24 hr. Phone #:
Date (Month/Year) Subcontractor's - Work Starts:		Work Ends:
CSLB Lic. #:	Class:	Expiration Date:
City of Moreno Valley Business License #:		Expiration Date:
Insurance – Date Submitted:		Date Approved:

CONTRACTOR / SUBCONTRACTOR LIST

City Project Number: _____ Project Name: _____

LIST CONTRACTOR AND ALL SUBCONTRACTORS:

SUBCONTRACTORS (Continued) (An independent contractor selected by the General Contractor, including all employees thereof)		
Company Name:		Phone #:
Company Address:		
Work to be performed by Subcontractor:		
Contact Name:		24 hr. Phone #:
Date (Month/Year) Subcontractor's - Work Starts:		Work Ends:
CSLB Lic. #:	Class:	Expiration Date:
City of Moreno Valley Business License #:		Expiration Date:
Insurance – Date Submitted:		Date Approved:
Company Name:		Phone #:
Company Address:		
Work to be performed by Subcontractor:		
Contact Name:		24 hr. Phone #:
Date (Month/Year) Subcontractor's - Work Starts:		Work Ends:
CSLB Lic. #:	Class:	Expiration Date:
City of Moreno Valley Business License #:		Expiration Date:
Insurance – Date Submitted:		Date Approved:
Company Name:		Phone #:
Company Address:		
Work to be performed by Subcontractor:		
Contact Name:		24 hr. Phone #:
Date (Month/Year) Subcontractor's - Work Starts:		Work Ends:
CSLB Lic. #:	Class:	Expiration Date:
City of Moreno Valley Business License #:		Expiration Date:
Insurance – Date Submitted:		Date Approved:

Please see e-mail for further information.

ACORD®

CERTIFICATE OF LIABILITY INSURANCE

DATE (MM/DD/YYYY)

THIS CERTIFICATE IS ISSUED AS A MATTER OF INFORMATION ONLY AND CONFERS NO RIGHTS UPON THE CERTIFICATE HOLDER. THIS CERTIFICATE DOES NOT AFFIRMATIVELY OR NEGATIVELY AMEND, EXTEND OR ALTER THE COVERAGE AFFORDED BY THE POLICIES BELOW. THIS CERTIFICATE OF INSURANCE DOES NOT CONSTITUTE A CONTRACT BETWEEN THE ISSUING INSURER(S), AUTHORIZED REPRESENTATIVE OR PRODUCER, AND THE CERTIFICATE HOLDER.

IMPORTANT: If the certificate holder is an ADDITIONAL INSURED, the policy(ies) must be endorsed. If SUBROGATION IS WAIVED, subject to the terms and conditions of the policy, certain policies may require an endorsement. A statement on this certificate does not confer rights to the certificate holder in lieu of such endorsement(s).

PRODUCER	CONTACT NAME:	
	PHONE (A/C, No, Ext):	FAX (A/C, No):
	E-MAIL ADDRESS:	

INSURED	INSURER(S) AFFORDING COVERAGE	NAIC #
	INSURER A :	
	INSURER B :	
	INSURER C :	
	INSURER D :	
	INSURER E :	
	INSURER F :	

COVERAGES **CERTIFICATE NUMBER:** **REVISION NUMBER:**

THIS IS TO CERTIFY THAT THE POLICIES OF INSURANCE LISTED BELOW HAVE BEEN ISSUED TO THE INSURED NAMED ABOVE FOR THE POLICY PERIOD INDICATED. NOTWITHSTANDING ANY REQUIREMENT, TERM OR CONDITION OF ANY CONTRACT OR OTHER DOCUMENT WITH RESPECT TO WHICH THIS CERTIFICATE MAY BE ISSUED OR MAY PERTAIN, THE INSURANCE AFFORDED BY THE POLICIES DESCRIBED HEREIN IS SUBJECT TO ALL THE TERMS, EXCLUSIONS AND CONDITIONS OF SUCH POLICIES. LIMITS SHOWN MAY HAVE BEEN REDUCED BY PAID CLAIMS.

INSR LTR	TYPE OF INSURANCE	ADDL INSD	SUBR WVD	POLICY NUMBER	POLICY EFF (MM/DD/YYYY)	POLICY EXP (MM/DD/YYYY)	LIMITS	
	☑ COMMERCIAL GENERAL LIABILITY						EACH OCCURRENCE	$ 1,000,000
	☐ CLAIMS-MADE ☑ OCCUR	☑	☐	XX0111222333			DAMAGE TO RENTED PREMISES (Ea occurrence)	$
							MED EXP (Any one person)	$
							PERSONAL & ADV INJURY	$ 1,000,000
	GEN'L AGGREGATE LIMIT APPLIES PER:						GENERAL AGGREGATE	$ 2,000,000
	☑ POLICY ☐ PRO-JECT ☐ LOC						PRODUCTS - COMP/OP AGG	$ 2,000,000
	☐ OTHER:							$
	AUTOMOBILE LIABILITY						COMBINED SINGLE LIMIT (Ea accident)	$ 1,000,000
	☑ ANY AUTO	☑	☐	YY0222333444			BODILY INJURY (Per person)	$
	☐ ALL OWNED AUTOS ☐ SCHEDULED AUTOS						BODILY INJURY (Per accident)	$
	☐ HIRED AUTOS ☐ NON-OWNED AUTOS						PROPERTY DAMAGE (Per accident)	$
								$
	☐ UMBRELLA LIAB ☐ OCCUR						EACH OCCURRENCE	$
	☐ EXCESS LIAB ☐ CLAIMS-MADE	☐	☐				AGGREGATE	$
	☐ DED ☐ RETENTION $							$
	WORKERS COMPENSATION AND EMPLOYERS' LIABILITY Y / N			ZZZ333444555			☑ PER STATUTE ☐ OTH-ER	
	ANY PROPRIETOR/PARTNER/EXECUTIVE OFFICER/MEMBER EXCLUDED? ☐ N / A						E.L. EACH ACCIDENT	$ 1,000,000
	(Mandatory in NH)						E.L. DISEASE - EA EMPLOYEE	$ 1,000,000
	If yes, describe under DESCRIPTION OF OPERATIONS below						E.L. DISEASE - POLICY LIMIT	$ 1,000,000

DESCRIPTION OF OPERATIONS / LOCATIONS / VEHICLES (ACORD 101, Additional Remarks Schedule, may be attached if more space is required)

The City of Moreno Valley, the City of Moreno Valley Community Services District, the Moreno Valley Housing Authority and each of their officers, officials, employees, agents and volunteers are additional insureds as respects to General Liability and Auto Liability insurance. This insurance is primary, and our obligations are not affected by any other insurance carried by such additional insured whether primary, excess, contingent, or on any other basis. Waiver of subrogation for Workers' Compensation and Employer's Liability insurance as respects to the City of Moreno Valley, the City of Moreno Valley Community Services District, the Moreno Valley Housing Authority and each of their officers, officials, employees, agents and volunteers.

SAMPLE

CERTIFICATE HOLDER

City of Moreno Valley
Attn: (Insert name of contract person)
14177 Frederick Street
Moreno Valley, CA 92552

CANCELLATION

SHOULD ANY OF THE ABOVE DESCRIBED POLICIES BE CANCELLED BEFORE THE EXPIRATION DATE THEREOF, NOTICE WILL BE DELIVERED IN ACCORDANCE WITH THE POLICY PROVISIONS.

AUTHORIZED REPRESENTATIVE

© 1988-2014 ACORD CORPORATION. All rights reserved.

THIS ENDORSEMENT CHANGES THE POLICY. PLEASE READ IT CAREFULLY.

ADDITIONAL INSURED – OWNERS, LESSEES OR CONTRACTORS – SCHEDULED PERSON OR ORGANIZATION

This endorsement modifies insurance provided under the following:

COMMERCIAL GENERAL LIABILITY COVERAGE PART

SCHEDULE

Name Of Additional Insured Person(s) Or Organization(s)	Location(s) Of Covered Operations
The City of Moreno Valley, the City of Moreno Valley Community Services District, the Moreno Valley Housing Authority and each of their officers, officials, employees, agents and volunteers	
Information required to complete this Schedule, if not shown above, will be shown in the Declarations.	

A. **Section II – Who Is An Insured** is amended to include as an additional insured the person(s) or organization(s) shown in the Schedule, but only with respect to liability for "bodily injury", "property damage" or "personal and advertising injury" caused, in whole or in part, by:

1. Your acts or omissions; or
2. The acts or omissions of those acting on your behalf;

in the performance of your ongoing operations for the additional insured(s) at the location(s) designated above.

However:

1. The insurance afforded to such additional insured only applies to the extent permitted by law; and
2. If coverage provided to the additional insured is required by a contract or agreement, the insurance afforded to such additional insured will not be broader than that which you are required by the contract or agreement to provide for such additional insured.

B. With respect to the insurance afforded to these additional insureds, the following additional exclusions apply:

This insurance does not apply to "bodily injury" or "property damage" occurring after:

1. All work, including materials, parts or equipment furnished in connection with such work, on the project (other than service, maintenance or repairs) to be performed by or on behalf of the additional insured(s) at the location of the covered operations has been completed; or
2. That portion of "your work" out of which the injury or damage arises has been put to its intended use by any person or organization other than another contractor or subcontractor engaged in performing operations for a principal as a part of the same project.

SAMPLE

 © Insurance Services Office, Inc., 2012

C. With respect to the insurance afforded to these additional insureds, the following is added to **Section III – Limits Of Insurance:**

If coverage provided to the additional insured is required by a contract or agreement, the most we will pay on behalf of the additional insured is the amount of insurance:

1. Required by the contract or agreement; or

2. Available under the applicable Limits of Insurance shown in the Declarations;

whichever is less.

This endorsement shall not increase the applicable Limits of Insurance shown in the Declarations.

SAMPLE

 © Insurance Services Office, Inc., 2012

THIS ENDORSEMENT CHANGES THE POLICY. PLEASE READ IT CAREFULLY.

PRIMARY AND NONCONTRIBUTORY – OTHER INSURANCE CONDITION

This endorsement modifies insurance provided under the following:

COMMERCIAL GENERAL LIABILITY COVERAGE PART
PRODUCTS/COMPLETED OPERATIONS LIABILITY COVERAGE PART

The following is added to the **Other Insurance** Condition and supersedes any provision to the contrary:

Primary And Noncontributory Insurance

This insurance is primary to and will not seek contribution from any other insurance available to an additional insured under your policy provided that:

(1) The additional insured is a Named Insured under such other insurance; and

(2) You have agreed in writing in a contract or agreement that this insurance would be primary and would not seek contribution from any other insurance available to the additional insured.

SAMPLE

© Insurance Services Office, Inc., 2012

THIS ENDORSEMENT CHANGES THE POLICY. PLEASE READ IT CAREFULLY.

ADDITIONAL INSURED – OWNERS, LESSEES OR CONTRACTORS – COMPLETED OPERATIONS

This endorsement modifies insurance provided under the following:

COMMERCIAL GENERAL LIABILITY COVERAGE PART
PRODUCTS/COMPLETED OPERATIONS LIABILITY COVERAGE PART

SCHEDULE

Name Of Additional Insured Person(s) Or Organization(s)	Location And Description Of Completed Operations
The City of Moreno Valley, the City of Moreno Valley Community Services District, the Moreno Valley Housing Authority and each of their officers, officials, employees, agents and volunteers	
Information required to complete this Schedule, if not shown above, will be shown in the Declarations.	

A. **Section II – Who Is An Insured** is amended to include as an additional insured the person(s) or organization(s) shown in the Schedule, but only with respect to liability for "bodily injury" or "property damage" caused, in whole or in part, by "your work" at the location designated and described in the Schedule of this endorsement performed for that additional insured and included in the "products-completed operations hazard".

However:

1. The insurance afforded to such additional insured only applies to the extent permitted by law; and
2. If coverage provided to the additional insured is required by a contract or agreement, the insurance afforded to such additional insured will not be broader than that which you are required by the contract or agreement to provide for such additional insured.

B. With respect to the insurance afforded to these additional insureds, the following is added to **Section III – Limits Of Insurance:**

If coverage provided to the additional insured is required by a contract or agreement, the most we will pay on behalf of the additional insured is the amount of insurance:

1. Required by the contract or agreement; or
2. Available under the applicable Limits of Insurance shown in the Declarations;

whichever is less.

This endorsement shall not increase the applicable Limits of Insurance shown in the Declarations.

SAMPLE

 © Insurance Services Office, Inc., 2012

POLICY NUMBER: YY0222333444

COMMERCIAL AUTO
CA 20 48 10 13

THIS ENDORSEMENT CHANGES THE POLICY. PLEASE READ IT CAREFULLY.

DESIGNATED INSURED FOR COVERED AUTOS LIABILITY COVERAGE

This endorsement modifies insurance provided under the following:

AUTO DEALERS COVERAGE FORM
BUSINESS AUTO COVERAGE FORM
MOTOR CARRIER COVERAGE FORM

With respect to coverage provided by this endorsement, the provisions of the Coverage Form apply unless modified by this endorsement.

This endorsement identifies person(s) or organization(s) who are "insureds" for Covered Autos Liability Coverage under the Who Is An Insured provision of the Coverage Form. This endorsement does not alter coverage provided in the Coverage Form.

This endorsement changes the policy effective on the inception date of the policy unless another date is indicated below.

Named Insured:
Endorsement Effective Date:

SCHEDULE

Name Of Person(s) Or Organization(s): The City of Moreno Valley, the City of Moreno Valley Community Services District, the Moreno Valley Housing Authority and each of their officers, officials, employees, agents and volunteers
Information required to complete this Schedule, if not shown above, will be shown in the Declarations.

Each person or organization shown in the Schedule is an "insured" for Covered Autos Liability Coverage, but only to the extent that person or organization qualifies as an "insured" under the Who Is An Insured provision contained in Paragraph **A.1.** of Section **II** – Covered Autos Liability Coverage in the Business Auto and Motor Carrier Coverage Forms and Paragraph **D.2.** of Section **I** – Covered Autos Coverages of the Auto Dealers Coverage Form.

SAMPLE

© Insurance Services Office, Inc., 2011

WORKERS' COMPENSATION AND EMPLOYERS' LIABILITY

THIS ENDORSEMENT CHANGES THE POLICY. PLEASE READ IT CAREFULLY.

WAIVER OF OUR RIGHT TO RECOVER FROM OTHERS ENDORSEMENT

We have the right to recover our payments from anyone liable for an injury covered by this policy. We will not enforce our right against the person or organization named in the Schedule. (This agreement applies only to the extent that you perform work under a written contract that requires you to obtain this agreement from us.)

You must maintain payroll records accurately segregating the remuneration of your employees while engaged in the work described in the Schedule.

The additional premium for this endorsement shall be _____% of the workers' compensation premium otherwise due on such remuneration.

Minimum Premium: $_____

Schedule

Person or Organization	Job Description
The City of Moreno Valley, the City of Moreno Valley Community Services District, the Moreno Valley Housing Authority and each of their officers, officials, employees, agents and volunteers	

ATTACHED TO AND FORMING A PART OF POLICY NO: ZZZ333444555
NAMED INSURED:
EFFECTIVE DATE OF ENDORSEMENT:
ENDORSEMENT NO: **DATE OF ISSUE:**

SAMPLE

City of Moreno Valley Business License

Any organization (Contractors, Subcontractors, etc.) doing business in the City of Moreno Valley is required to purchase a City of Moreno Valley Business License. The form can be acquired:

1) in-person at City Hall, on the Second Floor, in the Finance Department (or)

2) at the following web site: www.moval.org/biz-lic

APPENDIX H

LINE K-1 SPECIAL PROVISIONS

TABLE OF CONTENTS

GENERAL PROVISIONS 2
DESCRIPTION OF WORK 2
STANDARD SPECIFICATIONS AND DETAILS 2
ORDER OF WORK 2
SPECIAL WORK HOURS 3
SPECIAL NOTIFICATIONS 3
NOTIFICATION OF RESIDENTS AND BUSINESSES 4
COOPERATION AND COLLATERAL WORK 5
UTILITY AGENCY REQUIREMENTS 6
EXISTING UTILITY ADJUSTMENTS 8
PROTECTION AND RESTORATION OF EXISTING IMPROVEMENTS 8
PROTECT AND ADJUST SURVEY MONUMENT FRAMES, COVERS, AND SLEEVES 9
PROTECTION AND RESTORATION OF UNDERGROUND UTILITIES AND FACILITIES / POTHOLE 9
WEED AND PEST ABATEMENT 10
RED IMPORTED FIRE ANTS (RIFA) 12
RODENT CONTROL 12
WORK AREA REQUIREMENTS 13
STORM WATER POLLUTION PREVENTION PLAN (SWPPP) REQUIREMENTS 14
STREET MAINTENANCE 15
DUST CONTROL 15
CLEAN UP 17
GREEN WASTE RECYCLING 18
ASPHALT CONCRETE PAVEMENT REMOVAL AND RECYCLING 19
PORTLAND CEMENT CONCRETE REMOVAL AND RECYCLING 20
GRADING REQUIREMENTS (Unclassified Excavation, Unclassified Fill) 20
CONCRETE DRAINAGE STRUCTURES 21
TRENCH EXCAVATION, BEDDING, AND BACKFILL 30
TRAFFIC STRIPING, PAVEMENT MARKINGS, AND PAVEMENT MARKERS 34
BID ITEMS OF WORK 36
MOBILIZATION 36
ENVIRONMENTAL MITIGATIONS 36
STORMWATER AND NON-STORMWATER POLLUTION CONTROL 38
CALVARY CHAPEL WORK 38
BUILDER'S RISK INSURANCE 39
CLEARING, GRUBBING AND REMOVALS 40
REMEDIAL GRADING 42
EROSION CONTROL HYDROSEED 42
HEADWALL/WINGWALL STRUCTURE 43
REINFORCED CONCRETE BOX (RCB) 43
TRANSITION STRUCTURE 43
MANHOLE 44
GRATING CATCH BASIN 44
CORRUGATED METAL PIPE 44
REINFORCED CONCRETE PIPE (RCP) 45
AGGREGATE BASE 46
ASPHALT CONCRETE PAVEMENT 47
ASPHALT CONCRETE BERM/CURB 51
CHAIN LINK FENCE INSTALLATION 51
PIPE SWING GATE INSTALLATION 52
ROCK SLOPE PROTECTION (RIPRAP) 52
TRAFFIC CONTROL 53
TRAFFIC SIGNAL IMPROVEMENTS 58

GENERAL PROVISIONS

DESCRIPTION OF WORK

Line K-1 is located along Ironwood Avenue and consists of a pipeline constructed upstream of the SR-60/ Moreno Beach Drive interchange which will divert flow away from the interchange and convey it to the Nason Basin located in the northeast quadrant of the Nason Street interchange. At the upstream end of the pipeline, a diversion structure is proposed, comprising two large catch basins that intercept and convey flow to a 1482-feet long 90-inch RCP transitioning to a 90-feet long 7-foot x 7-foot RCB designated as the K-1 Line by the County of Riverside (County). The grate elevations for these catch basins are set above the invert of the existing dual 48-inch CMP culverts that currently convey the flow across Ironwood. In this way, low flows continue on the existing flow path (through the 48-inch culverts) while higher flows are diverted to the 90inch RCP. Line K-1 will outlet to a natural drainage flow path designated as Line K by the County. At the confluence of Line K and Line K-1, a rip rap pad will be constructed to avoid potential downstream erosion of the natural drainage flow path. The conveyance system designated as Line K ultimately conveys the flow to the downstream Nason Basin for detention of peak storm flows. Line K under Ironwood Avenue consists of a 72-inch CMP which will be modified as part of this project. Eastern Municipal Water District (EMWD) and Frontier will be reconstructing and relocating their facilities concurrently with the Contractor's work. The Contractor is to coordinate the work with these utilities and any other utility relocating their facilities.

STANDARD SPECIFICATIONS AND DETAILS

The work provided within the Special Provisions shall conform to and be in accordance with the Plans as well as:

- The 2018 Edition of the Standard Specifications for Public Works Construction, herein referred to as the "Standard Specifications"
- The 2012 Edition of the Standard Plans for Public Works Construction, herein referred to as the "Standard Plans"
- The 2018 California Department of Transportation Standard Specifications, herein referred to as the "State Standard Specifications"
- The 2018 California Department of Transportation Standard Plans, herein referred to as the "State Standard Plans"
- The California Manual on Uniform Traffic Control Devices (latest edition at the time of bid), herein referred to as "MUTCD"
- City of Moreno Valley Standard Plans, 2017 Edition, updated 08/20, herein referred to as the "City Standard Plans", and
- Riverside County Flood Control & Water Conservation District Standard Drawings, herein referred to as "RCFC&WCD Standard Plans."

ORDER OF WORK

Order of work shall consist of, but is not limited to the following:

- The first order of work shall consist of mobilization, installation of traffic control signs, and the installation of construction BMP's.
- Stage 1 – Phase 1 construction will consist of temporary pavement installation along Ironwood Avenue, west of Moreno Beach Drive.

- Stage 1 – Phase 2 includes shifting eastbound Ironwood Avenue traffic to temporary pavement and constructing a portion of the drainage system improvements west of Moreno Beach Drive.
- Stage 1 – Phase 3 consists of constructing westbound temporary pavement along Ironwood Avenue, west of Moreno Beach Drive.
- Stage 1 – Phase 4 consists of shifting westbound traffic along Ironwood Avenue to temporary pavement west of Moreno Beach Drive.
- Construction of drainage improvements along Ironwood Avenue east of Moreno Beach Drive will occur between Phases 1 and 4 and are independent of improvements constructed west of Moreno Beach Drive.
- Work occurring after construction of majority of drainage improvements along Ironwood Avenue will consist of the construction of an emergency access road and the installation of the temporary traffic signal modifications at Ironwood Avenue / Moreno Beach Drive. Using weekend closures of traffic along Moreno Beach Drive, northbound and southbound traffic will be routed to the temporary roadway at Ironwood Avenue / Moreno Beach Drive and the drainage improvements at the north side of the intersection can be constructed to connect segments adjacent to Ironwood Avenue, followed by construction of the ultimate intersection and traffic signal improvements.
- Stage 1 – Phase 5 consists of removal of eastbound and westbound temporary pavement along Ironwood Avenue, west of Moreno Beach Drive, and the restoration of striping and signing.
- Last orders of work include site cleanup, removal of traffic control signs, and hydroseeding graded areas.

SPECIAL WORK HOURS

The hours of construction are as set forth in Subsection 6-3, “Time of Completion,” of the Standard Specifications with the following exceptions:

> No work shall be allowed outside of regular work hours (in general unless specified, 7:00 a.m. to 3:30 p.m., on weekdays, except noted holidays), without the approval of the Engineer, except work items relating to maintenance and clean-up of the work area for the purpose of public safety and convenience. No special work hours are required unless requested by the Contractor and approved by the Engineer.

Schedule:
Per Subsection 6-1, “Construction Schedule and Commencement of the Work,” of the Standard Specifications, the Contractor shall submit a proposed construction schedule for the entire work to the Engineer for review and approval five (5) working days prior to the Pre-Construction Meeting and revised schedules thereafter as required by the Engineer when the Contractor’s activities differ or are expected to differ from the latest existing schedule. The Contractor shall submit to the City a monthly construction update or sooner as requested by the Engineer to confirm project progress. On a weekly basis, the Contractor shall prepare a three (3) week schedule that includes activities of the past week and a two (2) week look ahead.

SPECIAL NOTIFICATIONS

The following entities will require special notification and coordination with respect to the subject work.

Agencies:

- Riverside County Flood Control and Water Conservation District (RCFC&WCD):
  Work on the Districts Facilities; coordinate a pre-construction meeting with RCFC&WCD prior to start of construction. (David Garcia, 951-955-1288)

- Eastern Municipal Water District (EMWD):
  Coordinate sewer manhole and water line relocation work within storm drain construction limits. (Armando Arroyo, 951-928-3777, ext 4480)

Private Property Owners with Right of Entry Agreements:
The City has acquired a 15' to 19' Permanent Easement and 10' Temporary Construction Easements at the vacant parcels along the north side of Ironwood Avenue within the project limits, where construction activity is allowed.

Contractor is to strictly adhere to all the requirements of the Agreement when working in the Calvary Chapel of Moreno Valley (APN 473-160-009) Property. A copy of the executed "Agreement for Conveyance of Property" is included in the Appendices. Contractor will coordinate with the City to coordinate notifications of the property owners.

Utilities:

- Eastern Municipal Water District (EMWD):
  For work in and around EMWD's existing facilities and new construction, Contractor shall be responsible for arranging and coordinating with EMWD for protection of sewer, domestic water, and recycled water lines within the construction limits.

NOTIFICATION OF RESIDENTS AND BUSINESSES

The Contractor shall notify in person and with printed notification (in English and Spanish language), at least ten (10) working days prior to commencing work, to all agencies, firms, institutions, postal service, residents, hospitals, Riverside Transit Authority (RTA), schools, stores, utilities and waste disposal service fronting or affected by the work. Additional printed notification (in English and Spanish language) shall be given not less than forty-eight (48) hours prior to performing any work which will restrict property access, close or partially close the street, or which will restrict or disallow street parking. All schools and churches shall receive seven (7) working days notification prior to performing any work which will restrict property access.

The Contractor shall coordinate with the school district for pick-up and drop off of school children, RTA for the pick-up and drop off of riders, waste disposal collection, the postal service to ensure delivery of mail, and churches for weekly or special activities.

Temporary "No Parking" signs shall be posted at least 36 hours, but no more than 49 hours, in advance of the work on each street. The signs shall be placed at 100 feet apart on each side of the street and at shorter intervals if conditions warrant, as determined by the Engineer. Signs that are removed by wind, vandals, or other reasons, before the re-opening of the street, shall be reposted by the Contractor. All signs shall be removed within 24 hours after work is complete.

In the event that temporary no parking must be rescheduled due to weather conditions or other unforeseen circumstances or delays, all signs shall be removed within two (2)

hours of notification and reposted by the Contractor per the requirements of these Special Provisions.

The Contractor shall provide the signs and be responsible for adding the dates and hours of closure and other information as shown below to the signs, removal of the signs, and furnishing and placing barricades, if necessary, for posting the signs at each location. The following information shall appear on each posted “No Parking” sign:

1. Date(s) sign is in effect.
2. Time period sign is in effect. (Time period and date appearing on the signs shall include only the period during which the operations are to occur.)
3. Reason for posting (such as pavement removal and replacement, cracking sealing, slurry sealing, etc.)
4. The applicable vehicle code that parking will be prohibited on that particular street.
5. Contractor’s name and contact phone number.

Contractor shall obtain the Engineer’s approval of information on the signs prior to posting.

Requirements for posting signs:

1. Signs shall never be nailed or stapled on living trees or utility poles.
2. Signs shall not be posted on private property.
3. Signs shall be posted within the parkway area or as close to the roadway as practical.
4. Signs shall not be obstructions for ADA access.
5. Signs shall not be reused for different locations.
6. Signs that create unnecessary parking restrictions will not be allowed.

Existing parking restriction signs (due to street sweeping), immediately adjacent to the work areas receiving temporary “No Parking” signs, may be covered to allow affected residents parking closer to their homes, subject to the approval of the Engineer.

The printed notices shall contain a general description of the work to be done and the date that the work is to be done. The notices shall also include a statement that parking will be restricted as called for on the "NO PARKING" signs to be posted along the street. All public notices must be reviewed and approved by the Resident Engineer prior to its distribution.

The Contractor shall also post printed "NO PARKING-TOW AWAY" signs at one-hundred-foot (100') (thirty meters (30m)) maximum spacing along each side of the affected street for forty-eight (48) hours prior to the commencement of the street improvement work. The Contractor shall document the day, date and time the "NO PARKING" signs were posted.

Full compensation for compliance with the preceding requirements shall be considered as being included in the various contract items in the bid schedule and no additional compensation will be allowed therefor.

COOPERATION AND COLLATERAL WORK

Cooperation shall be in accordance with Subsection 2-4, “Cooperation and Collateral Work,” of the Standard Specifications and these Special Provisions.

The Contractor shall be responsible for ascertaining the nature and extent of any simultaneous, collateral, and essential work by others and coordinating with the work by others. The City, other contractors and utilities shall have the right to operate within or adjacent to the work site during the performance of such work.

Should construction be under way by other forces or by other contractors within or adjacent to the limits of the work specified or should work of any other nature be under way by other forces within or adjacent to those limits, the Contractor shall cooperate with all the other contractors or other forces to the end that any delay or hindrance to their work will be avoided. The right is reserved to perform other or additional work at or near the site (including material sources) at any time, by the use of other forces.

Eastern Municipal Water District (EMWD) and Frontier will be reconstructing and relocating a portion of their facilities concurrently with the Contractor's work. The Contractor is to coordinate the work with these utilities and any other utility relocating their facilities at no separate or additional cost.

Each contractor shall be responsible to the other for all damage to work, to persons or property caused to the other by their operations, and for loss caused the other due to unnecessary delays or failure to finish the work within the time specified for completion.

The Contractor shall include in its bid all costs involved as a result of coordinating its work with others. The Contractor will not be entitled to additional compensation from the City for damages resulting from such simultaneous, collateral, and essential work. If necessary to avoid or minimize such damage or delay, the Contractor shall re-deploy its work force to other parts of the work.

It is anticipated that all the existing utilities will be relocated during construction. The Contractor is to coordinate its work with the utility companies and with any other utility relocating their facilities, at no separate or additional cost.

Should the Contractor be delayed by the City, and such delay could not have been reasonably foreseen or prevented by the Contractor, the Engineer will determine the extent of the delay, the effect on the project, and any extension of time. Should any agency or utility company's work result in delays to the Contractor's work schedule, the Contractor shall be entitled only to an equivalent extension of time for the completion of the contract, and shall not be entitled to damages due to downtime and idled equipment or additional payments over and above the agreed upon unit prices.

Compensation for compliance with all collateral work shall be considered, as being included in the various Contract items in the bid schedule and no additional compensation will be allowed therefor.

UTILITY AGENCY REQUIREMENTS

Eastern Municipal Water District (EMWD):
The Contractor is to relocate an existing EMWD 12-inch waterline in conflict with the new 72-inch CMP and 7-foot Wide and 7-foot High Reinforced Concrete Box. Contractor will be required to coordinate work with EMWD including pre-construction meeting and submittal requirements. Delays due to failure of the Contractor to coordinate work activities shall not be compensated.

Special Provisions for the waterline relocation are located in the Appendices.

No separate measurement and payment will be made for coordination with EMWD. The work will be considered incidental to and included in the prices for other items provided in the Bid Schedule.

Frontier:
The Contractor is to note that Frontier will relocate an existing telephone cabinet in conflict with the new 90-inch RCP. Work is being performed under a separate contract and may be scheduled during the course of this Project. Contractor will be required to schedule and coordinate work with Frontier and/or its contractor. Delays due to failure of the Contractor to coordinate work activities shall not be compensated.

No separate measurement and payment will be made for coordination with Frontier. They will be considered incidental to and included in the prices for other items provided in the Bid Schedule. Frontier Construction Plans are included in the Supplemental Project Information.

Riverside County Flood Control and Water Conservation District (RCFC&WCD):
Contractor is to note that major portions of this project will be constructed on behalf of RCFC&WCD or within RCFC&WCD right-of-way. The City has entered into a Cooperative Agreement (Moreno MDP Line K-1 Project No. 4-0-00766) with RCFC&WCD. This Agreement is included in the Appendices and is part of these Contract Documents. The Contractor is to strictly adhere to all requirements of the RCFC&WCD (including the requirements of the Memorandum of Understanding, Riverside County Traffic Department and Riverside County Flood Control and Water Conservation District for Design, Construction, Inspection and Maintenance of Flood Control Drainage Facilities, dated March 2020 included in the Appendices) when performing work on this project, including all storm drain facilities. RCFC&WCD shall conduct periodic inspections and shall approve for acceptance for their ownership and maintenance of the project improvements. RCFC&WCD has final say on what is considered as acceptable. These requirements are briefly summarized as follows:

1. Notice of Intent – Contractor is to file a notice to RCFC&WCD at least twenty (20) days prior of start of construction of any RCFC&WCD facilities. Contractor shall not start any work on RCFC&WCD facilities until a Notice to Proceed is issued by RCFC&WCD.

2. Comprehensive Liability Insurance - coverage for both bodily injury and property damage for a limit of not less than two million dollars ($2,000,000) per occurrence. RCFC&WCD and County of Riverside shall be named as additional insured and RCFC&WCD and County of Riverside will be notified at least sixty (60) days prior to the effective date of cancellation, non-renewal, or reduction in coverage of the insurance policy.

3. Worker’s Compensation Insurance – certificate shall be provided to RCFC&WCD.

4. Declaration of Sufficiency of Funds – shall be provided to RCFC&WCD.

5. Contractor Designation – a complete list of all contractors and subcontractors to be performing work on RCFC&WCD facilities, including license number and license class.

6. Construction Schedule – a schedule with the order and dates that the Contractor proposes to carry on the work, including estimated start and completion dates.

7. Construction Schedule of Values – a complete list of work items and cost breakdown.

8. Affirmative Action Compliance Program – shall be provided to RCFC&WCD.

9. Confined Space Procedure – Contractor shall comply with all Cal/OSHA safety regulations including regulations concerning confined space and maintain a safe working environment on the site. The procedure shall comply with requirements contained in California Code of Regulations, Title 8 Section 5158, Other Confined space Operations, Section 5157, Permit Required Confined Space and RCFC&WCD Confined Space Procedures, SOM-18. The procedure shall be reviewed and approved by RCFC&WCD prior to the start of the work.

10. Material testing will be done in accordance with RCFC&WCD requirements on all storm drain facilities and facilities will be subject to inspection and acceptance by the RCFC&WCD.

No separate measurement and payment will be made for coordination with RCFC&WCD. The work will be considered incidental to and included in the prices for other items provided in the Bid Schedule.

EXISTING UTILITY ADJUSTMENTS

Utility adjustments shall conform to the provisions in Subsection 402-2, “Relocation,” and Section 306, “Open Trench Conduit Construction,” of the Standard Specifications, the Standard Plans and Standard Specifications of the various utility owners and these Special Provisions.

The Contractor shall adjust all existing utilities to finished grade, where shown on the Plans, or as directed by the Engineer and shall conform to the standards and specifications of the affected utility owner. The Contractor shall notify the affected utility owner forty-eight (48) hours prior to the beginning of work and for inspection.

Full compensation for furnishing all labor, materials (including but not limited to rings, steps, frames, covers, and slip cans), backfilling, tools, equipment and incidentals, and for doing all the work involved in adjusting utilities appurtenances to grade or as directed by the Engineer, shall be considered as included in the contract price paid for the various items of work that require the adjustment to grade and no additional compensation shall be allowed therefor.

PROTECTION AND RESTORATION OF EXISTING IMPROVEMENTS

Protection and Restoration of Existing Improvements shall be in accordance with Section 400, "Protection and Restoration," of the Standard Specifications, and these Special Provisions.

All trees, shrubbery and lawns which are deprived of normal irrigation due to a disruption of service caused by the Contractor's operations shall be regularly and thoroughly irrigated by the Contractor so that said plantings will not be damaged. If any trees, shrubbery, lawns or their plants die or suffer unacceptable damage as a result of or precipitated by the Contractor's operations, the Contractor shall replace it with the same plant species and size. Existing grass lawns within the area which must be excavated and/or re-graded, shall be cut into approximately 300 mm (12 in) squares, removed, protected, cared for and replaced as soon as possible. Dead, dying, and unacceptably damaged grass shall be replaced with new grass sod.

The upper 150 m (6 in) of all backfill in areas subject to planting and/or replanting shall be topsoil, free of rocks and debris. Backfill below this depth shall consist of native soil, free of rocks, and debris, and compacted to a relative compaction of 85 percent (85%).

Damaged or injured plants shall be removed and recycled though green waste processors. At the option of the Contractor, removed trees and shrubs may be reduced to chips and removed from the project.

Replacement planting of injured or damaged trees, shrubs and other plants shall be completed not less than 20 working days prior to completion of the work. Replacement plants shall be watered as necessary to maintain the plants in a healthy condition.

Existing hardscape that is not to be removed and is damaged due to the Contractor's operations shall be restored or replaced in as nearly the original condition and location as is reasonably possible.

Full compensation for compliance with the preceding requirements shall be considered as being included in the various Contract items in the bid schedule and no additional compensation will be allowed therefor.

PROTECT AND ADJUST SURVEY MONUMENT FRAMES, COVERS, AND SLEEVES

Existing survey markers, monuments, and benchmarks shall be protected in place. Monument frames, covers, and sleeves shall be furnished and adjusted to finished grade.

Existing survey markers, monuments, and benchmarks not conforming to the proposed roadway finish surface shall remain accessible by means of an approved sleeve and lid per City Standard Plans (Drawings MVSI-170A-1, MVSI-170B-0, and MVSI-170E-0), or by other methods approved by the Engineer

Full compensation for compliance with the preceding requirements shall be considered as being included in the various Contract items in the bid schedule and no additional compensation shall be allowed therefor.

PROTECTION AND RESTORATION OF UNDERGROUND UTILITIES AND FACILITIES / POTHOLE

All existing underground utilities and facilities such as electric utilities, gas utilities, telephone utilities, television utilities, water utilities, street lighting facilities, traffic signal facilities, sanitary sewers, storm drains, and irrigation systems may not have been shown on the Plans for this project. The Contractor shall assume that any of these underground utilities and/or facilities may be encountered during the removal and reconstruction work and shall protect and restore same in place in accordance with Subsection 402-2, “Protection,” of the Standard Specifications, and the following requirements and provisions:

The Contractor shall pothole utilities in any areas of excavation, including but not limited to, street widening, utility pole installation or relocation, light pole installation or relocation, pipe installation, catch basin installation, pavement reconstruction, and traffic signal equipment foundation installation. The Contractor shall submit pothole locations to the City five (5) working days ahead of USA notification for review and comment. The Contractor retains sole

responsibility for utilities. The Contractor shall pothole a minimum of two (2) working days ahead of the construction or installation for the area in which the work is to be performed. The "potholes" shall be to a depth sufficient to satisfy the Contractor that the proposed construction work will not damage any underground utilities and/or facilities. The Contractor shall be solely responsible for the cost of repair for any such damage to said underground utilities and/or facilities and shall, except for irrigation systems, make or cause to be made all repairs necessary to restore service the same day.

The Contractor shall begin potholing activities as one of the initial work items prior to ordering materials and commencing construction, all potholes for the entire project shall be started within five (5) working days from the Notice to Proceed. All potholes shall be slurry sealed and paved when in a paved area, in accordance with City Standard Plans (Drawing MVSI-132D-0).

The Contractor retains sole responsibility for utilities. The Contractor shall be solely responsible for the cost of repair for any such damage to said underground utilities and/or facilities and shall, except for irrigation systems, make or cause to be made all repairs necessary to restore service the same day.

Full compensation for compliance with the preceding requirements shall be considered as being included in the various Contract items in the bid schedule and no additional compensation will be allowed therefor.

Full compensation for furnishing all labor, equipment, materials, and tools required to perform Pothole of all underground utilities and substructures, whether shown on the Plans or not, and as ordered by the Engineer, shall be considered as being included in the various Contract items of work and no separate or additional compensation will be allowed therefor.

WEED AND PEST ABATEMENT

Weed and pest abatement shall commence after clearing and grubbing the site.

The Contractor is to apply herbicide in all areas within the project, unless specified otherwise on the Plans.

Application shall be state certified in the U.S. Environmental Protection Agency (EPA) pesticide applicator category suited for the application. Qualification of applicator, a copy of manufacturer's label, and Material Safety Data Sheet (MSDS) must be submitted to the City prior to commencement of work. The Contractor shall submit on request, samples from stocks at the job site. Should analysis, performed by the City, indicate such samples to contain less than the amount of active ingredient specified on the label, work performed with such products shall be repeated, at no additional cost to the City. The Contractor shall submit warranty application report, and documents signed by an officer of the Contractor after work has been completed. The Contractor shall deliver chemical to the project site in a sealed and labeled container in good condition as supplied by the manufacturer or formulator. Storage, handling, and registration shall be under the Federal Insecticide, Fungicide, and Rodenticide Act (FIFRA), as amended or appropriate regulations of the host county.

All pesticides (herbicides, insecticides, rodenticides, fungicides, etc) shall be applied per a written recommendation from a registered Pest Control Advisor (PCA) and in compliance with the product label.

Formulate, treat, and dispose of chemicals and their containers in accordance with label directions. Draw water for formulating only from sited designated by the City, and fit the filling hose with a backflow preventer meeting local plumbing codes or standards. The filling operation shall be under the direct and continuous observation of a Contractor's representative to prevent overflow. Secure chemicals and related materials under lock and key when unattended. Ensure that proper protective clothing and equipment are worn and used during all phases of chemical application.

At the time of application, the soil shall have a sufficient low moisture content to allow uniform distribution of the treatment solution throughout the soil. Do not make applications during or immediately following heavy rains or when conditions may cause runoff.

Contractor shall irrigate for a minimum of fourteen (14) days, to a minimum depth of one-half (1/2) inch, all areas that will be planted to germinate weeds. Weeds outside of the proposed planted areas shall be chemically treated and removed monthly, and prior to project acceptance.

Herbicides shall be applied to damp soil surface. Pre-germination period shall be performed by applications of water to sufficiently dampen the soil for two weeks prior to the application of herbicide. Additional applications of herbicide will be required to achieve complete weed kill, prior to planting.

General weeds (grassy and broadleaf) shall be treated with Round-Up Pro® (41% Active Glyphosate) transolcative herbicide equal. Certain weeds are resistant to Glyphosate. These weeds require specialty herbicides. The Pest Control Advisor shall identify treatment of such weeds.

Nutsedge (purple and yellow) require chemical treatment with Monsanto Manage® or approved equal. A minimum of two treatments within 21 days are required. Additional chemical treatments as required to control Nutsedge. Pulling and/or scraping off Nutsedge is not an acceptable or permitted
Weed control method.

Bayer Ronstar® granular (Oxadiazon 3, 50% active ingredient) preemergegence herbicide or approved equal, shall be applied to all shrub and ground cover beds immediately after planting and at the end of the 90-day maintenance period. Consult label for application instructions. All existing weeds at time of application must be chemically sprayed with approved contact or translocative herbicide.

Insects and fungus shall be controlled by appropriate pesticides throughout the project duration. The site shall be pest free at time of acceptance.

Pesticides not listed shall be used per written recommendation of a PCA.

Notify Agency Representative two working days prior to application of chemical.

All solution mixed applications shall be applied with a paddle agitator spray rig. Blue chemical dye is required to be added to the chemical mix.

Weed control treatment shall be applied after the subgrade has been completed and just prior to placing the aggregate base course or asphalt concrete. The Pest Control Advisor shall identify

treatment of area. The time lapse between soil treatment and placing of cover shall be the practicable minimum.

The Contractor shall provide all necessary protection to prevent injury to animal or adjacent plant life and property occasioned by the application of the approved herbicide. The Contractor will be held responsible for all personal injury or property damage caused by the application of soil sterilants or the storage of the same.

Prior to placement of turf grass, the area to be planted shall be chemically treated “weed free”. Follow the pesticide manufacturer’s recommendations regarding replanting period.

The project shall be weed free (chemically treated) at the end of the project.

Full compensation for compliance with the preceding requirements shall be considered as being included in the various Contract Items in the Bid Schedules and no additional compensation will be allowed therefor.

RED IMPORTED FIRE ANTS (RIFA)

The City of Moreno Valley has areas of infestation of red imported fire ant colonies and has quarantine areas. Movement of earth within and from the quarantine areas is restricted to inspection and possible treatment. RIFA have been found to nest under cracked pavement, sidewalks, water meter boxes, pull boxes, and traffic signal cabinets, along with other utilities within the right of way.

The Contractor shall notify the California Department of Food & Agriculture (760) 776-8208 or Riverside County Agricultural Commissioner before excavating or moving any earth or making a disturbance to the soil. The Contractor shall fill out and send a cooperative Red Imported Fire Ant Project Agreement to the California Department of Food and Agriculture, 73-710 Fred Waring Drive, Suite 220, Palm Desert, CA 92260.

Should the Contractor be delayed, and such delay could not have been reasonably foreseen or prevented by the Contractor, the Contractor shall be entitled only to an equivalent extension of time for the completion of the Contract, and shall not be entitled to damages due to downtime and idled equipment or additional payments over and above the agreed upon unit prices.

Full compensation for compliance with the preceding requirements shall be considered as being included in the various Contract items in the bid schedule and no additional compensation will be allowed therefore, except if the RIFA are found. A Contract Change Order will be issued for the eradication of the RIFA.

RODENT CONTROL

Rodent population exists at the project site. The Contractor is to apply pesticides in all areas within the project, unless specified otherwise on the Plans.

Applicator shall be state certified in the U.S. Environmental Protection Agency (EPA) pesticide applicator category suited for the application. Qualification of applicator, a copy of manufacturer’s label, and Material Safety Data Sheet (MSDS) must be submitted to the City prior to commencement of work. The Contractor shall submit on request, samples to contain less than the amount of active ingredient specified on the label, work performed with such

products shall be repeated, at no additional cost to the City. The Contractor shall submit warranty, applications report, and documents signed by an officer of the Contractor after work has been completed, The Contractor shall deliver chemical to the project site in a sealed and labeled container in good condition as supplied by the manufacturer or formulator. Store, handle and use pesticides in accordance with manufacturer's labels. Labels shall bear evidence of registration under the Federal Insecticide, Fungicide, and Rodenticide Act (FIFRA), as amended or appropriate regulations of the host country.

All pesticides (herbicides, insecticides, rodenticides, fungicides, etc) shall be applied per a written recommendation from a registered Pest Control Advisor (PCA) and in compliance with the product label.

At the beginning of the project, the Contractor shall inspect the entire project site, treating all existing gopher, mice, and ground squirrel activity. Contractor shall level all mounds after treatment. Treatments will involve one (1) initial treatment, followed by two (2) inspections and/or treatments within thirty (3) days of the initial treatment of the site. Additional treatments shall be performed twice a month and immediately prior to project acceptance.

Contractor shall notify the Engineer, in writing, in advance; on dates for all inspections, Contractor shall perform all treatments in accordance with applicable State, County, and City laws and regulations. Materials used must not contaminate ground water or have any in-ground movement. Contractor shall utilize all safeguards necessary during rodent control operations to ensure safety of the public and ground-feeding animals, in accordance with current standard practices accepted by the State of California Department of Food and Agriculture. Contractor must clean up any spilled bait, and use proper disposal procedures.

Full compensation for compliance with the preceding requirements shall be considered as being included in the various Contract Items in the Bid Schedules and no additional compensation will be allowed therefor.

WORK AREA REQUIREMENTS

No material or equipment shall be stored at the job sites without permission from the property owner and the City. The job sites shall be maintained in neat and orderly condition at all times, with allowance for pedestrian access. The Contractor will also be responsible for securing access locations at the end of each working day.

Any haul routes needed for movement of soils or materials shall be confined within the limits of work area. Any changes of grade resulting from haul routes and the Contractor's operations or activities, within the work area, shall be restored to the original grades. The restoration of the grade shall include but is not limited to restoration of the drainage pattern(s), flowlines, drainage courses, pads, compaction and existing rough grade sections. Restoration will also include re-establishment of growth through hydroseeding of all areas disturbed by the Contractor's Operations in accordance with these Special Provisions, including any storage and staging areas.

Payment shall be considered as included in the various contract items of work and no additional payment will be allowed therefor.

STORM WATER POLLUTION PREVENTION PLAN (SWPPP) REQUIREMENTS

The Storm Water Pollution Prevention Plan (SWPPP) and all the permitting, registration, updates, reporting and implementation, shall be the Contractor's responsibility, and shall conform to the State Water Resources Control Board (SWRCB) and the California Regional Water Quality Control Board (CRWQCB) - Santa Ana Region requirements. At a minimum the following requirements will apply:

a. The Contractor, upon award of the project, is responsible for the SWPPP document and its site map, amendments, reporting, updates, implementation, certification, corrective action and noticing required by the SWRCB and CRWQCB. This will require the Contractor, at a minimum, to retain a Qualified SWPPP Developer (QSD) and a Qualified SWPPP Practitioner (QSP) for the duration of the project. Contractors QSD/QSP shall meet with the Engineer on a weekly basis and demonstrate documented proof of continued compliance with Construction General Permit and SWPPP requirements.

b. The SWPPP is a "living document" and must reflect the Contractor's staging and sequence of work as the project progresses. The Contractor must continuously update the SWPPP document, inspect and record the Best Management Practices (BMP's) being implemented, update the SWPPP site map, and maintain records at the project site and have available at the project site at all times, for the regulatory agency review.

c. Contractor is responsible for selection and implementation of all BMP's in accordance with the requirements of the SWRCB and CRWQCB. The Contractor shall not rely upon the draft SWPPP document prepared by the City as the document satisfying the requirements for the project. The Contractor shall prepare a project specific SWPPP that is tailored to the Contractor's operations and reflects how the project will progress and be staged.

d. Once the Contractor’s SWPPP has been reviewed by the City, the City will file the Notice of Intent (NOI) and obtain a Waste Discharge Identification (WDID) number (or the Application Number when the City files the NOI) for the project. The draft SWPPP cannot be used for construction activity.

e. The Contractor has full responsibility for compliance with the SWRCB and CRWQCB requirements, and the implementation and maintenance of the SWPPP and all BMP's. Any failure by the Contractor, in the opinion of the SWRCB and RWQCB or the Engineer, to fulfill these requirements may result in a notice of violation, and withholding of payments, issuance of penalties and Civil Liabilities. In the event of the Contractor's failure to comply which results in fines and/or a higher risk level assessment or an increased discharge requirements assigned to the project, the Contractor shall be responsible for all costs associated with the fines and/or new assessment.

Payment shall be considered as included in the various contract items of work and no additional payment will be allowed therefor.

STREET MAINTENANCE

The Contractor shall be responsible for the maintenance of the streets and roadways to be used by public and local traffic through and adjacent to the construction zone, from the date of "Notice to Proceed" until the date of acceptance of the completed construction improvements.

Street maintenance shall include filling of potholes by placing and compacting temporary asphalt concrete (AC) cold mix for smooth driveway approaches, street transitions, gutters, and spandrels, and installing interim pavement striping and markers on the street and other side streets within the construction zone, as directed by the Engineer. Street maintenance shall include protection of the grading of subgrade and base. Street maintenance shall include the protection, maintaining, and replacing of existing signs, and placing bags over signs that are no longer applicable, as directed by the Engineer. Street maintenance shall also include sweeping and washing of streets, adjacent and connected to the construction zone on a weekly, or more frequent schedule, to prevent the accumulation of dust, dirt, gravel or other deleterious materials, all as necessary to maintain the construction roadways and adjacent streets in a safe, clean, and drivable condition for use by public and local traffic. Work shall be done as necessary and as approved by the Engineer and in conformance with the Project Storm Water Pollution Prevention Plan and National Pollution Discharge Elimination System (NPDES) requirements.

Full compensation for furnishing all labor, equipment, materials, and tools required to perform Street Maintenance of the type and to the limits noted above, and as ordered by the Engineer, shall be considered as being included in the various Contract items of work and no separate or additional compensation will be allowed therefor.

DUST CONTROL

Dust control shall be performed in accordance with Subsection 3-12.1, "General," of the Standard Specifications, South Coast Air Quality Management District (SCAQMD) Rule 403, the general Provisions and the following Provision.

Dust resulting from the Contractor’s performance of the work, either inside or outside, the right-of-way shall be controlled by the Contractor. Dust control includes the action necessary to prevent, reduce or control dust within the work area as required to complete the work. The Contractor shall carry out proper and efficient measures to prevent his operations from producing dust in amounts damaging to property or causing a nuisance, or harm to persons living nearby or occupying buildings in the vicinity of the work. The Contractor shall control dust 24 hours a day, seven days a week. The methods to be used for controlling dust in the construction area and along haul roads shall be approved by the Engineer prior to starting any work. The Rule 403 Implementation Handbook published by the SCAQMD, contains a detailed listing of reasonably available dust control measures.

Dust or dirt accumulations generated by the Contractor’s operations shall be cleaned and removed by the Contractor from all areas as designated by the Engineer. Areas to be cleaned shall include, but not be limited to swimming pools, interiors of any structures including residences and places of business, exteriors of any structures including roofs, patios, driveways, and any other areas as required. The Contractor shall retain a professional cleaning service for the cleaning of swimming pools, and the interior and exterior of structures. The cost for cleaning and removal of dust or dirt shall be at the Contractor’s expense and no additional compensation will be made therefor.

Water for use in dust control shall, at the option of the Contractor, be potable or non-potable. Non-potable water shall consist of reclaimed waste water or non-potable water developed from other sources.

If the Contractor uses reclaimed waste water in the work, the sources and discharge of reclaimed waste water shall meet the California Department of Health Services Water Reclamation Criteria and the Regional Water Quality Control Board requirements. The Contractor shall obtain either a waste water discharge permit or a waiver from the Regional Water Quality Control Board. Copies of permits or waivers from the Regional Water Quality Control Board shall be delivered to the engineer before using reclaimed waste water in the work.

Water shall be applied in the amounts, at the locations, and for the purposes designated in the Standard Specifications and these Special Provisions, and as order by the Engineer.

Water for compacting embankment material, sub-base, base and surfacing material, and for laying dust, shall be applied by means of pressure-type distributors or pipe lines equipped with a spray system or hoses with nozzles that will ensure a uniform application of water.

All equipment used for the application of water shall be equipped with a positive means of shut-off.

Unless otherwise permitted by the Engineer or unless all the water is applied by means of pipe lines, at least one mobile unit with a minimum capacity of 3700 L (1,000 gallons) shall be available for applying water on the project at all times.

Chemical additives or binder may be used in water for compaction or dust palliative. If such additives are used, furnishing and applying the additives shall be at the Contractor's expense.

The right is reserved by the Engineer to prohibit the use of a particular type of additive, to designate the locations where a particular type of additive may not be used, or to limit the amount of a particular type of additive to be used at certain locations, all if the Engineer has reasonable ground for believing that such use will in any way be detrimental.

The additive or binder shall be either miscible in water or be some form of material that is directly applied to the surface without mixing with water.

Additives or binders that are miscible in water shall be either a resin emulsion, an SS1 type asphaltic emulsion, materials composed essentially of lignin sulfonate, or any other binder that is miscible in water in the proportions provided herein is non-corrosive, and is effective as a dust palliative.

Resin emulsion shall be composed of from 57 percent (57%) to 63 percent (63%) of semi-liquid petroleum resin and the remainder water to which a suitable emulsifying agent has been added. The resin emulsion shall be readily miscible with water and when diluted with any hard water in the proportions of one part of emulsion to 10 parts water shall show no signs of breakdown or separation of the petroleum resin base. Resin emulsion, which has been stored in closed containers at temperatures above freezing for a period up to 3 months, shall show no signs of separation. Any resin emulsion which has been stored for more than 3 months shall not be used until tested and approved.

SS1 type asphaltic emulsion shall conform to the provisions in Subsection 203-3, "Emulsified Asphalt."

Additives or binders that are miscible in water shall be mixed with additional water at the rate of from 4 to 19 parts of water to one part of binder, the exact rate to be determined by the Engineer. Mixing shall be accomplished by placing the binder and water in the spreading equipment simultaneously or by some other mixing method that will produce equivalent results.

The resulting mixture shall be applied with pressure type water distributor trucks equipped with a spray system or pressure type asphalt distributors at an approximate rate of from 0.9- to 3.6 L/m2 (O.2 to 0.8 gallons per square yard).

Additives or binders that are directly applied to the surface without mixing with water shall be applied with equipment approved by the Engineer. The binder shall be applied at a rate of from 0.4- to 1.1 L/m2 (0.10 to 0.25 gallons per square yard).

The exact rate and number of applications of binders will be determined by the Engineer.

Dust control ordered by the Engineer to be applied on Saturdays, Sundays or holidays will be included in the Contract price for dust control and no additional compensation will be allowed therefor.

No adjustment of compensation will be made for any increase or decrease in the quantity of dust control required, regardless of the reason for such increase or decrease.

Full compensation for all direct and indirect costs incurred for work performed or materials used to control dust resulting from the Contractor’s performance of the work and caused by public traffic, either inside or outside the right of way or as ordered by the Engineer to be applied on Saturdays, Sundays or holidays, shall be considered as included in the Contract prices paid for the various items of work involved and no additional compensation will be allowed therefor.

Full compensation for development of water, including the costs of obtaining a fire hydrant meter and all water used, shall be considered as included in the various items of work involved and no additional compensation shall be allowed therefor.

CLEAN UP

Throughout all phases of construction, including suspension of work and until the final acceptance, the Contractor shall keep the site clean and free from rubbish and debris.

The Contractor shall remove and dispose of all loose material and debris caused by construction operations from the construction site on a daily basis.

Materials and equipment shall be removed from the site as soon as they are no longer necessary. Before the final inspection, the site shall be cleared of all rubbish, weeds, unwanted plants/trees, excess and unused materials, falsework, temporary structures, and equipment so as to present a satisfactory clean and neat appearance. All clean up costs shall be included in the Contractor's Bid.

Care shall be taken to prevent spillage on haul routes. Any such spillage shall be removed immediately and the area cleaned.

Excess excavated material from catch basins or similar structures shall be removed from the site immediately. Sufficient material may remain for use as backfill if permitted by the Specifications or Engineer. Forms and form lumber shall be removed from the site as soon as practicable after striping.

Failure of the Contractor to comply with the Engineer's clean up orders may result in an order to suspend work until the condition is corrected. No additional compensation will be allowed as a result of such suspension.

Before final inspection of the work, the Contractor shall clean the right of way, private property, material sites, and all ground occupied by the Contractor in connection with the work of all rubbish, weeds, unwanted plants/trees, excess and unused materials, falsework, temporary structures, and equipment. All parts of the work shall be left in a neat and presentable condition.

Full compensation for collecting and disposing of loose material and debris from the job site shall be considered as included in the contract prices paid for the various items of work involved and no additional compensation will be allowed therefor.

GREEN WASTE RECYCLING

Work shall consist of removal of green waste (grass clippings, sod, leaves, shrubs, and any other vegetation) in conformance with Subsection 300-1 "Clearing and Grubbing," of the Standard Specifications. The Contractor shall be responsible for recycling the green waste through a green waste processor.

Subsection 300-1.3.1 "General" of the Standard Specifications shall include as follows:

> The Contractor shall make all arrangements for removal and recycling of the material at offsite locations and provide the City with the weight certification in tons of recycling green waste and the required monthly Solid Waste Disposal and Recycling Reports.

Holes resulting from the removal shall be backfilled with soil from the surrounding area the same day and compacted to a minimum relative compaction of ninety percent (90%).

All removed material shall be removed from the project site the same day.

Stockpiling of materials within the right of way, City parking lots, or other City-improved property shall not be allowed unless written permission is given by the Engineer.

Full compensation for all costs involved in removing and recycling of green waste shall be considered as included in the contract lump sum price paid for Clearing, Grubbing, and Removals and shall include full compensation for all labor, materials, tools, equipment, loading, hauling, recycling, providing recycling weight certification, reports, and incidentals for doing all work involved in green waste recycling and no additional compensation will be allowed therefor. If the Contractor does not provide the weight certification of recycling and the required monthly Solid Waste Disposal and Recycling Reports, then that portion of the payment for Clearing, Grubbing, and Removals will be withheld until the weight certification and reports are provided.

ASPHALT CONCRETE PAVEMENT REMOVAL AND RECYCLING

The outline area of the asphalt concrete pavement to be removed shall be cut on a neat line with a power-driven saw to minimum depth of 2 in before removing the surfacing. The Contractor will not be required to sawcut the pavement where the join line or cut line is cold milled.

If the Contractor chooses to remove the asphalt concrete by cold milling, at least two full time flag persons shall be assigned to the milling machine for traffic control when working on streets open to traffic.

Before cold milling pavement that contains existing traffic signal detector loops, the Contractor shall notify the Engineer at least three (3) working days prior to commencing said work.

Cold Milling shall be in accordance with Section 404 of the Standard Specifications and these Special Provisions.

The Contractor shall provide a smaller machine if required to trim areas inaccessible to the larger machine at manholes, gate valve covers, curb returns, and intersections. The smaller machine shall be equipped with 12 inch minimum-width cutting drum mounted on a chassis allowing it to be positioned without interrupting traffic or pedestrian flow.

Cold Milling shall include edge milling, header milling and profile milling as necessary to provide the required grades and allow for a smooth pavement profile in preparation for asphalt concrete overlay paving. Milling limits shown on the plans are approximate. The Engineer may direct the Contractor to cold mill in other areas, as necessary for construction. Some adjustment of limits and depths will be necessary to accommodate paving requirements.

Care shall be exercised not to damage adjacent concrete including curbs without gutters. Gutters or curbs damaged shall be replaced at the Contractor's expense.

The Contractor shall take care not to contaminate the millings with non-aggregate base material, including disintegrated granite.

During the milling operation, the Contractor shall sweep the entire street with mechanical equipment and remove all loosened material from Work site until completion of the removal work. The Contractor shall take all necessary measures to avoid dispersion of dust and to maintain streets clean in accordance with these Special Provisions.

Pavement fabrics were installed in the arterial streets as included in this project and may be exposed due to the milling. The Contractor is required to separate the pavement fabrics from the grindings prior to hauling off to recycling facility and to burn off all leftovers of the fabrics prior to repaving. Full compensation for removing, separating and burning off leftover pavement fabrics shall be included in various bid items for asphalt concrete removals, and no separate or additional compensation will be allowed therefor.

The asphalt concrete, including aggregate base, shall be disposed of at a recycling plant. The Contractor shall provide the City with the weight certification of recycling in tons of asphalt concrete and the required monthly Solid Waste Disposal and Recycling Reports.

If the Contractor does not provide the weight certification of recycling and the required monthly Solid Waste Disposal and Recycling Reports, then payment will be withheld until the weight certification and reports are provided.

Full compensation for all costs involved in Asphalt Concrete Pavement Removal and Recycling shall be considered as included in the lump sum price paid for Clearing, Grubbing, and Removals and shall include full compensation for, but not limited to, furnishing all labor, materials, tools, equipment, saw cutting, loading, hauling, recycling, providing recycling weight certification, reports, and incidentals, for doing all work involved in asphalt concrete removal and recycling, and no additional compensation will be allowed therefor. If the Contractor does not provide the weight certification of recycling and the required monthly Solid Waste Disposal and Recycling Reports, the payment for Clearing, Grubbing, and Removals will be withheld until the weight certification and reports are provided.

PORTLAND CEMENT CONCRETE REMOVAL AND RECYCLING

Work shall consist of removal of Portland Cement Concrete (PCC) in conformance with Subsection 401-3.2 of the Standard Specifications.

The Contractor shall make all arrangements for removal and recycling of the material and provide the City with the weight certification of recycling in tons of PCC and the required monthly Solid Waste Disposal and Recycling Reports. The PCC shall be clean.

Full compensation for all costs involved in removing and recycling of PCC shall be considered as included in the lump sum price paid for Clearing, Grubbing, and Removals and shall include full compensation for all labor, materials, tools, equipment, loading, hauling, recycling, providing recycling weight certification, reports, and incidentals, for doing all work involved in PCC removal and recycling, and no additional compensation will be allowed therefor. If the Contractor does not provide the weight certification of recycling and the required monthly Solid Waste Disposal and Recycling Reports, then that portion of the payment for Clearing, Grubbing, and Removals will be withheld until the weight certification and reports are provided.

GRADING REQUIREMENTS (Unclassified Excavation, Unclassified Fill)

Project Grading shall comply with the provisions of these Special Provisions. At a minimum the following requirements will apply:

a. Access ramp shall be graded to the subgrade as shown on the Plans.

b. Grade channel outlet to the subgrade (below the riprap lining).

Where voids have been created by the removal of buried materials, roots and other work described in Clearing and Grubbing of these Special Provisions must be backfilled with properly compacted soil.

Earthwork associated with the proposed storm drain channel, Line K-1, should be performed in accordance with the applicable Riverside County Flood Control and Water Conservation District (RCFC&WCD) requirements of the Memorandum of Understanding and the Standard Specifications.

Unclassified Excavation:

Unclassified Excavation shall be completed in accordance with Subsection 300-2, “Unclassified Excavation,” of the Standard Specifications and these Special Provisions. Unclassified excavation shall consist of all excavation to subgrade elevation unless separately designated as remedial grading.

No clearing and/or grading operations shall be performed without the presence of a qualified Geotechnical Engineer. An on-site, pre-job meeting with the Engineer, the Contractor, and the Geotechnical Engineer shall occur prior to all grading related operations.

Unclassified excavation includes loading, hauling, and/or disposing of the excess materials to other fill areas or to disposal site or to off-site away from the project limits.

Subsection 300-2.2, “Unsuitable Material,” of the Standard Specification shall be deleted entirely from these bid items.

Unclassified Fill:

Unclassified fill shall be completed in accordance with Subsection 300-4, “Unclassified Fill,” of the Standard Specifications and these Special Provisions.

Unclassified fill shall consist of all fill to subgrade elevation including fill slopes to daylight, unless separately designated as remedial grading.

Contractor shall place fills in uniform lifts not exceeding eight (8) inches in thickness. Fill materials shall be compacted to a minimum relative compaction of ninety percent (90%). The onsite soils are generally suitable for reuse as compacted fill, provided they are free of organic materials, debris, and oversized materials (greater than three (3) inches in greatest dimension). Any import materials shall be tested and approved by the Geotechnical Engineer.

Unclassified fill includes excavating, loading, hauling of materials from the borrow site to the fill areas.

Full compensation for complying with these requirements shall be considered as included in the payment for Remedial Grading.

CONCRETE DRAINAGE STRUCTURES

Concrete drainage structures shall conform to the provisions of Subsection 303, "Concrete and Masonry Construction," of the Standard Specifications, and these Special Provisions.

Subsection 303-1.1, "General," of the Standard Specifications shall be deemed revised to include the following:

> Drainage inlets, head walls, end walls, junction structures, transition structures, manholes, and other types of Portland Cement Concrete (PCC) structures shall be constructed to the lines and grades in accordance with the designs and details shown on the Plans and as specified in the Specifications.

This work shall include construction of structures of cast-in-place concrete or of precast concrete members using either unreinforced, reinforced or prestressed concrete or any combination thereof.

All sewer mains and laterals shall be protected in accordance with RCFC&WCD Standard Plans.

The work involved in precast concrete members shall include the manufacture, transportation, and storage of girders, slabs, piling, and other structural members of precast concrete and shall also include the placing of all precast concrete members, except piling. The members shall be furnished complete including all concrete, prestressing steel, bar reinforcing steel, and incidental materials in connection therewith.

Subsection 201-1.1.2, "Concrete Specified by Class and Alternate Class," of the Standard Specifications, Table 201-1.1.2, shall be deemed revised to include the following:

A. The ingredients are to be well mixed and brought to the proper consistency and to have a compressive strength at the age of 28 days of not less than the amount shown in the following tabulation for each type of work listed:

CONCRETE CLASS 385-B-28	**TYPE OF WORK** **Cast-in-Place-Pipe**
385-B-28 (650-B-4000)	Transition Structure No. 1, 2 & 4
300-C-23 (560-C-3250)	Manholes, Transition Structure No. 3 Catch Basin no. 1, 4 Junction Structure No. 1, 2, 3, 4, & 6 Bulkheads, headwalls, cutoff walls, collars, Encasements and miscellaneous concrete not otherwise specified.

The Contractor shall submit mix designs for all types of concrete to be placed for approval by the Engineer prior to placement of any concrete.

Subsection 201-1.2.5.3, "Fly Ash," of the Standard Specifications, shall be deemed revised to include the following:

Fly Ash may be substituted for cement, up to a maximum of 15 percent by weight for all concrete. Fly Ash shall meet the standards of ASTM Designation: C 618. When Fly Ash is used, water reducing agents meeting ASTM Designation: C 494 will be permitted in amounts recommended by the supplier and approved by the Engineer.

No other admixture shall be used in any class of concrete without the prior approval of the Engineer.

Subsection 201-1.4.3, "Transit Mixers," of the Standard Specifications, shall be deemed revised to include the following:

Ready mixed concrete delivered to the job site shall be accompanied by a ticket containing the weight of each of the individual ingredients in the concrete mix.

Pumping of water from the interior of any structure or foundation enclosure shall be done in such manner as to preclude the possibility of any portion of the concrete materials being carried away. No pumping will be permitted during the placing of concrete, or for a period of at least 24 hours thereafter, unless it be done from a suitable sump separated from the concrete work.

Subsection 303-1.3, "Forms," of the Standard Specifications, shall be deemed revised to include the following:

> Concrete shall not be deposited in the forms until all work connected with constructing the forms has been complete, all materials required to be embedded in the concrete have been placed for the unit to be poured, and the Engineer has inspected the forms and materials. This work shall include the removal of all dirt, chips, sawdust, water, and other foreign material from the forms.

The rate of depositing concrete in forms shall be controlled to prevent deflections of the forms or form panels in excess of the deflections permitted by these Special Provisions.

Forms for all concrete surfaces that will not be completely enclosed or hidden below the permanent ground surface shall conform to the requirements herein for forms for exposed surfaces. Interior surfaces of underground drainage structures shall be considered to be completely enclosed surfaces.

Prior to the use of each forming system to be used for exposed surfaces and when requested by the Engineer, the Contractor shall furnish form design and materials data to the Engineer for approval.

Forms for exposed concrete surfaces shall be designed and constructed so that the formed surface of the concrete does not undulate excessively in any direction between studs, joists, form stiffeners, form fasteners, or wales. Undulations exceeding either 2.5 mm (1/8 in) or 0.0037- of the center to center distance between studs, joists, form stiffeners, form fasteners, or wales will be considered to be excessive. Should any form or forming system, even though previously approved for use, produce a concrete surface with excessive undulations, its use shall be discontinued until modifications satisfactory to the Engineer have been made. Portions of concrete structures with surface undulations in excess of the limits herein may be rejected by the Engineer.

All exposed surfaces of each element of a concrete structure shall be formed with the same forming materials or with materials which produce similar concrete surface textures, color, and appearance.

Forms for exposed surfaces shall be faced with form panels. A form panel shall be considered to be the continuous section of form facing material, unbroken by joint marks, against which the concrete is placed.

Form panels for exposed surfaces shall be plywood conforming to or exceeding the requirements of U.S. Product Standard PS 1 for Exterior B-B (Concrete Form) Class I Plywood or any material other than plywood which will produce a smooth uniform concrete surface substantially equal to that which would result from the use of that plywood. Only form panels in good condition free of defects, such as scars, dents or delaminations, shall be used for exposed surfaces.

Form panels for exposed surfaces shall be furnished and placed in uniform widths of not less than 0.9m (3 ft) and in uniform lengths of not less than 1.8 m (6 ft), except at the end of continuously formed surfaces where the final panel length required is less than 0.9 m (3 ft). Where the width of the member formed is less than 0.9m (3 ft) the width of the panels shall not be less than the width of the member. Panels shall be arranged in symmetrical patterns conforming to the general lines of the structure. Except when otherwise provided herein or shown on the Plans, panels for vertical surfaces shall be placed with the long dimension horizontal and with the horizontal joints level and continuous. Form panels for curved surfaces of columns shall be continuous for a minimum of one quarter of the circumference, or 1.8 m (6 ft). For walls with sloping footings which do not abut other walls, panels may be placed with the long dimension parallel to the footing. Form panels on each side of the panel joint shall be precisely aligned, by means of supports or fasteners common to both panels, to result in a continuous unbroken concrete plane surface. When prefabricated soffit panels are used, form filler panels joining prefabricated panels shall have a uniform minimum width of one foot, and shall produce a smooth uniform surface with consistent longitudinal joint lines between the prefabricated panels.

Form fasteners consisting of form bolts, clamps or other devices shall be used as necessary to prevent spreading of the forms during concrete placement. The use of ties consisting of twisted wire loops to hold forms in position will not be permitted.

Anchor devices may be cast into the concrete for later use in supporting forms or for lifting precast members. Driven types of anchorages shall not be used for fastening forms or form supports to concrete except on interior surfaces of girders in prestressed box girder bridges where the following conditions are met:

> Anchorages penetrate the girder a maximum of 50 mm (2 in) and have a minimum spacing of 150 mm.
>
> The anchorages are placed 75 mm (3 in) clear, minimum, from edge of concrete.
>
> Form fasteners and anchors shall be of those types that can be removed without chipping, spalling, heating or otherwise damaging the concrete surface.

Forms for drainage inlets may be constructed of any suitable materials that will produce a structure with the inside dimensions and at least the wall thickness shown on the Plans. Undulations of finished interior wall surfaces shall not exceed 15 mm (3/4 in). Outside forms shall extend at least 130 mm (5 in) below the top of the inlet. Concrete may be deposited against excavated earth below this depth except that full depth outside forms or other protection shall be used whenever the instability of the earth of the Contractor’s operations cause hazardous conditions or contamination of the concrete.

Subsection 303-1.4.4, "Standard Structures," of the Standard Specifications, shall be deemed revised to include the following:

> Forms shall be removed only when approved by the Engineer. Forms shall be removed in such a way as to prevent damage to the concrete. Supports shall be removed in a manner that will permit the concrete to take stresses due to its own weight uniformly.
>
> Forms shall not be removed sooner than the following minimum time or strength after the concrete is placed. These times represent the cumulative number of days and

fractions of days, not necessarily consecutive, during which the temperature of the air adjacent to the concrete is above 10o C (50o F). If the temperature falls below 10o C (50o F) at any time after the concrete is placed in the forms, the Engineer will advise the Contractor of additional time required before forms may be removed.

ELEMENT	TIME OR STRENGTH
Reinforced Concrete Box, Transition Structures No. 1, 2, & 4	11.1 MPa (1600 psi)
Cast-in-Place Pipe	6 hours
All other Structures	16-24 hours

Subsection 303-1.7.1, "General", of the Standard Specifications, shall be deemed revised to include the following:

Reinforcing steel for reinforced concrete boxes, bridges, retaining walls, rectangular channels, spillways and transition structures shall be Grade 400 (60) Billet-Steel. For other reinforced concrete structures the reinforcement shall be Grade 300 (40) Billet-Steel or greater as approved by the Engineer. Reinforcing steel shall conform to the requirements of Subsection 201-2 "Reinforcement for Concrete" of the Standard Specifications. In either case, the reinforcing steel for use in structures constructed from State Standard Plans shall be of the grade as called for on those Plans. The Contractor shall furnish a "Certificate of Compliance" with the Specification of ASTM Designation: A-615. All splices shall conform to the requirements of the latest edition of A.C.I. Manual, Standard No. 318. Splices requested by the Contractor for his convenience shall be subject to approval by the Engineer.

Before concrete is placed, the reinforcement to be embedded shall be free of mortar, oil, dirt, excessive mill scale and scabby rust, and other coatings of any character that would destroy or reduce the bond.

Reinforcement shall conform accurately to the dimensions shown on the Plans.

Bars shall not be bent or straightened in a manner that will injure the material. Bars with kinks or improper bends shall not be used.

Hooks and bends shall conform to the provisions of the Building Code Requirements for Reinforced Concrete of the American Concrete Institute.

Reinforcement shall be accurately placed as shown on the Plans and shall be firmly and securely held in position by wiring at intersections and splices and by using precast mortar blocks or other approved devices of sufficient strength to resist crushing under applied loads. Wooden, aluminum, ferrous material chairs, and plastic supports shall not be used. Placing bars on layers of fresh concrete as the work progresses will not be permitted.

Subsection 303-1.8.1, "General," of the Standard Specifications, shall be deemed revised to include the following:

The concrete in each integral part of the structure shall be placed continuously, and the Contractor will not be allowed to commence work on any integral part unless sufficient material for the concrete is on hand, and the Contractor’s forces and equipment are sufficient to complete the part without interruption in the placing of the concrete.

Joints in the concrete due to stopping work shall be avoided as far as possible, and when necessary shall be constructed as directed by the Engineer.

Concrete shall be placed and consolidated by methods that will not cause segregation of the aggregates and will result in a dense homogeneous concrete which is free of voids and rock pockets. All concrete shall be placed while fresh and before it has taken an initial set. Retempering any particularly hardened concrete with additional water will not be permitted.

The consistency of the concrete shall be such as to allow it to be worked into place without segregation. Unless otherwise specified, the slump shall be 75 mm (3 in) for all concrete, except the concrete for the cast-in-place concrete pipe shall have a slump of 50 mm (2 in).

The slump test shall be performed in accordance with the requirements of ASTM Designation: C 143. Slumps greater than those specified shall be cause for rejection of the concrete by the Engineer.

Concrete shall not be placed except in the presence of the Engineer. The Contractor shall give reasonable notice to the Engineer each time he intends to place concrete. Such notice shall be far enough in advance to give the Engineer adequate time to inspect the subgrade, forms, steel reinforcement and other preparations for compliance with the requirements of the Plans and specifications before concrete is delivered for placing.

Subsection 303-1.8.3, "Depositing," of the Standard Specifications, shall be deemed revised to include the following:

> Formed concrete shall be placed in horizontal layers in lifts of not more than 500 mm (20 in). Hoppers and chutes, pipes and "elephant trunks" shall be used as necessary to prevent segregation of the concrete.

Subsection 303-1.8.4, "Consolidating," of the Standard Specifications, shall be deemed revised to include the following:

> The Contractor will not be allowed to place concrete until at least two operable high frequency internal vibrators are on the site and shown to be operable to the Engineer.

Subsection 303-1.8.6, "Joints," of the Standard Specifications, shall be deemed revised to include the following:

> When new concrete is shown on the Plans to be joined to existing concrete by means of bar reinforcing steel dowels grouted into holes drilled in the existing concrete, the holes shall be drilled by methods that will not shatter or damage the concrete adjacent to the holes. Holes in which longitudinal or transverse reinforcement is encountered during drilling before the specified depth is attained shall be rejected. A new hole, which does not strike reinforcement, shall be drilled adjacent to the rejected hole to the depth shown on the Plans. With approval of the Engineer, all holes including rejected holes may be cored through reinforcing steel to the correct depth. The diameters of the drilled holes shall be 6 mm (1/4 in) larger than the nominal diameter of the dowels unless shown otherwise on the Plans. The grout shall be a neat cement paste of Portland cement and water. The water content shall be not more than 35 L per 100 kg of cement. Retempering of grout will not be permitted. Immediately prior to placing the dowels, the

holes shall be cleaned of dust and other deleterious materials, shall be thoroughly saturated with water, have all free water removed and the holes shall be dried to a saturated surface dry condition. Sufficient grout shall be placed in the holes so that no voids remain after the dowels are inserted. Grout shall be cured for a period of at least 3 days or until the dowels are encased in concrete, whichever occurs first, by either the curing compound method or by keeping the surface of the grout continuously damp. Any dowels or grout, which fail to bond or are damaged before the new concrete is placed, shall be removed and replaced.

Subsection 303-1.9.1, "General," of the Standard Specifications, shall be deemed revised to include the following:

A tight wood float finish will be required on the surface of all buried structures.

The finish on all exposed formed surfaces shall conform to the requirements of Subsection 303-1.9.3, "Class 1 Surface Finish," of the Standard Specifications and these Special Provisions:

Surface finish shall be Class 1 Surface Finish unless otherwise approved by the Engineer.

Exposed corners of all concrete structures shall be finished with a 19 mm (3/4 in.) chamfer.

Concrete flatwork shall match adjacent surfaces. The concrete shall be struck off and tamped or vibrated until a layer of mortar has been brought to the surface. The top surface and face of curbs, gutters, and catch basins shall be finished to match adjacent surfaces.

Subsection 303-1.10, "Curing," of the Standard Specifications, shall be deemed revised to include the following:

The Contractor will not be allowed to place concrete until curing materials and applicators are on the site and shown to the Engineer.

Curing compound shall comply with the requirements of Subsection 201-4.1, "Membrane Curing Compounds," of the Standard Specifications and Special Provisions. The curing compound shall be No. 5, White Pigmented Curing Compound conforming to the requirements of ASTM designation: C-309, Type 2, Class B for all concrete surfaces other than for flatwork, which shall be coated with a clear or translucent curing compound containing a red fugitive dye.

The curing compound shall be sprayed on the moist concrete surface as soon as free water has disappeared, but shall not be applied to any surface until patching, repairs, and finishing of that surface are completed. The curing compound shall be thoroughly mixed immediately before applying, and shall be applied at a uniform rate of not less than 3.785 L (1 gal) per 14 m2 (150 square ft) of surface.

Weepholes/Drain Holes shall be constructed in abutment walls, catch basins, retaining walls, and wing walls in accordance with the Plans, Specifications, and at locations directed by the Engineer.

All weepholes shall be 65 mm (2-1/2 in) in diameter unless noted otherwise on the drawings. Weepholes may be formed by scheduled 40 PVC pipe or greater, or other methods acceptable to the Engineer.

All weepholes shall have a rodent screen consisting of hardware cloth securely and permanently attached over the drains opening on the back face of the wall.

The hardware cloth shall be a commercial quality, approximately 6mm (1/4 in) mesh wire cloth of galvanized steel wire. The steel wire before galvanizing, shall have a diameter of 600 μm, minimum. Hardware cloth shall be mounted in the forms prior to placing concrete in such a manner that the wire is firmly bonded to the concrete or may be fastened to the exterior of the concrete surface by masonry nails or other methods approved by the Engineer.

Filter material for the weepholes shall be 25 mm (1 in) nominal size crushed rock conforming to the gradation of Subsection 200-1.2, “Crushed Rock and Rock Dust,” of the Standard Specifications. Filter material shall also meet the quality requirements of Subsections 200-1.1, “General,” and 200-1.2 “Crushed Rock and Rock Dust,” of the Standard Specifications.

Filter material shall be wrapped in a single layer of filter fabric as shown on the drawings or approved by the Engineer. Filter fabric shall conform to that specified for underdrains per Subsection 96-1.02B, “Filter Fabric,” of the State Standard Specifications.

Filter fabric shall be furnished in protective wrapping which shall protect the fabric from ultraviolet radiation and from abrasion due to shipping and handling. The fabric shall also be ultraviolet stabilized.

The fabric shall be placed in the manner and at the locations shown on the drawings. The surface to receive the fabric shall be prepared to a smooth condition free of obstructions and debris.

The fabric shall be covered within 72 hours of is placement. Should the fabric be damaged during construction, the torn or punctured section shall be repaired or replaced as directed by the Engineer.

Manhole rings are required and shall conform to ASTM Designation C-478 and the drawings. The rings shall be laid up using Type II cement with a 1:2 mix mortar, and with 13 mm (1/2 in) minimum thickness pointed joints. On completion, the vertical wall section shall not be out of plumb by more than 13 mm (1/2 in) in 3 m (10 ft) of vertical height. The manhole rings shall also be accurately aligned. The cast iron manhole frame and cover shall be installed, with the frame accurately set to the finished grade of pavement, in mortar well tamped around the perimeter of the frame to ensure full bearing.

Manhole frames and covers shall conform to Subsection 206-3, “Gray Iron and Ductile Iron Castings,” of the Standard Specifications.

Revise Subsection 206-3.1 “General,” of the Standard Specifications to include the following:

> The foundry identifying mark, heat number, and dates shall be cast on the inside of the manhole frames, and on the bottom of the cover. Foreign made or imported manhole frames and covers shall have the country of origin cast on the top, and be in compliance with Federal regulations. The castings shall be free from cracks, blowholes, or other

imperfections, straight true to pattern, and have a uniform finish. The cover shall fit firmly into the frame without rocking, with the frame placed so that the cover is flush with the finished paving. Cover shall be cast with the letter "D" for storm drain, "S" for sewers, or the agency identification that owns the facility in accordance with the agency's standard, requiring lettering or identification on the top of the cover.

Manhole frames and covers shall be of the minimum weight as shown on the RCFC&WCD Standard Plans (Drawing No. MH260), and the weight of each frame and cover shall be indicated thereon in white paint.

Revise Subsection 206-3.2, "Materials," of the Standard Specifications to include the following:

All castings shall conform to ASTM A-48, Class 35B (proof load test 28,600 pounds minimum), for non-traffic loads such as catch basins, undersidewalk drains, and A-48, Class 35B or better (proof load test 40,700 pounds minimum), for traffic loads and all other locations unless stated otherwise on the Plan.

Manhole frames and covers shall be tested in accordance with Test Method B of Subsection 206-3.4.2, "Tensile Testing" of the Standard Specifications. Test results and Certification shall be received by the engineer and approved prior to the installation of any castings.

Add to Subsection 206-3.3.2, "Manhole Frame and Cover Sets and Grates," of the Standard Specifications the following:

The castings for manholes in streets and in non-paved surfaces shall be thoroughly cleaned and coated with asphaltic paint. Castings to be installed in PCC shall be galvanized.

Full compensation for complying with these requirements shall be considered as included in the payment for the various concrete items listed on the Bid Schedule.

The Contract item Headwall/Wingwall Structure shall be constructed in accordance with Caltrans Standard Plan Number D84 and as detailed on the Plans and as approved by the Engineer.

The Contract item Single Reinforced Concrete Box shall be completely constructed, in accordance to State Standard Specifications and Caltrans Standard Plan Number D80, as detailed on the Plans and as approved by the Engineer.

The Contract item Manholes and Transition Structures shall be completely constructed, in accordance to RCFC&WCD Standard Plans (Drawings No. MH252 and TS301), as detailed on the Plans and as approved by the Engineer.

The Contract item Grating Catch basin shall be completely constructed, in accordance to the Standard Plans (Standard Plan 305-3), as detailed on the Plans and as approved by the Engineer.

Payment for concrete drainage structures shall be made as called for on the bid schedule for various drainage structures.

TRENCH EXCAVATION, BEDDING, AND BACKFILL

Trench Excavation, Bedding, and Backfill shall be in conformance with Subsection 306, "Open Trench Conduit Construction," and related sections of the Standard Specifications, and these Special Provisions. Excavation, bedding and backfill detail and materials shall be in conformance with RCFC&WCD Standard Plans (Drawing No. M815).

Trench Excavation, Subsection 306-1, "General," of the Standard Specifications, shall be deemed revised to include the following:

> Excavation covers the removal of all material including but not limited to asphalt, aggregate base, abandoned pipelines, boulders, and concrete from within the excavation. The Contractor shall not disturb any vegetation or stream bed soils and shall not allow any employee, equipment and material to encroach within 1.5 m (5 ft) or cross a blue line stream bed as designated on U.S. Geological Survey Topographic Maps. The Contractor shall abide by all conditions and provisions of the California Department of Fish and Game Permit, California Regional Water Quality Control Board Permit and the U.S. Army Corps of Engineers Permit. The Contractor may be subject to civil and criminal penalties if found in violation.

In excavating for surfaces against which concrete is to be placed, care shall be exercised in removing the final lift, as not to loosen the remaining soil. Upon completion of excavation for structures and pipe, surfaces against which concrete is to be placed shall be free of debris, mud or ponded water.

The foundation for all concrete structures including concrete channels and sideslopes for slope paving will be inspected and tested after excavation. The subgrade shall be compacted to ninety percent (90%) relative compaction prior to the placement of concrete.

Material, which will not provide a suitable foundation, shall be removed and replaced with compacted select material as directed by the Engineer.

Any overexcavation shall be filled with select material compacted to ninety percent (90%) relative compaction and meeting the material requirements for backfill.

The removal of bedrock material from within the excavation which requires the use of blasting, or equipment beyond that normally used to accomplish the excavation (as determined by the Engineer) shall be paid for in accordance with Subsection 2-9, "Changed Conditions" of the Standard Specifications.

Slides and materials eroding into the work shall be removed by the Contractor and the slopes and grades refinished to original grades as specified.

The topography shown on the Plans may vary from the actual field conditions due to erosion caused by recent storms. The fill material shall be placed such that it does not block drainage and cause ponding. Placement of fill material on other properties within the City requires a stockpile or grading permit.

In the event of damage to existing or new facilities during the process of construction, the Contractor shall promptly repair the damage, and shall pay for all costs of the repair, and shall be liable for all costs resulting from the interruption of any services.

Payment for trench excavation shall be considered as included in the contract price paid for the various related items of work and no additional compensation shall be allowed therefor.

Unprotected trenches shall not remain open overnight. Work areas shall not be opened to traffic prior to placement of temporary resurfacing. The temporary resurfacing, per Subsection 306-13 “Trench Resurfacing” of the Standard Specifications, shall be a minimum thickness of 75 mm (0.25 ft) and must be continually maintained to provide a smooth safe ride for vehicles. When backfilling an excavation in the roadway (whether transverse or longitudinal) which cannot be properly completed within a work day, steel plate bridging with a non-skid surface and shoring may be required to preserve unobstructed traffic flow or chain link fence with proper delineation as approved by the Engineer.

In the case of steel plating, the following conditions shall apply:

1. The pavement shall be cold milled to a depth equal to the thickness of the plate and to a width and length equal to the dimensions of the plate.
2. Steel plates used for bridging must extend a minimum of 12 in beyond the edges of the trench.
3. Steel plates must meet required traffic loads and non-skid surface.
4. The trench shall be adequately shored to support the bridging and traffic loads.
5. Steel plate bridging shall be installed to operate with minimum noise.
6. Multiple plates must be tack welded as needed to secure plates.
7. Bridging shall be secured against displacement by using adjustable cleats, shims or other devices.
8. Temporary paving with cold asphalt concrete shall be used to feather the edges of the plates.

Steel plate bridging shall be installed using the following Method:

The pavement shall be cold planed to a depth equal to the thickness of the plate and to a width and length equal to the dimensions of the plate.

Unless authorized by the Engineer, steel plate bridging should not exceed four consecutive working days.

The following table shows the advisory (not mandated) thickness of steel plate bridging needed for a given trench width. The Contractor is responsible for selecting the plates to be used:

MAXIMUM ALLOWABLE TRENCH WIDTH	STEEL PLATE THICKNESS
0.25 m (10 in) (0.83 ft)	13 mm (1/2 in)
0.6 m (23 in) (1.92 ft)	19 mm (3/4 in)
0.8 m (31 in) (2.59 ft)	22 mm (7/8 in)
1.05 m (41 in) (3.42 ft)	25 mm (1 in)
1.6 m (63 in) (5.25 ft)	32 mm (1-1/4 in)

Steel plate bridging shall be steel of minimum A 36 grade designed for HS20-44 truck loading per Caltrans Bridge Design Specifications Manual. The Contractor shall maintain on the steel plate a non-skid surface having a minimum coefficient of friction equivalent to 0.35 as

determined by California Test Method 342. If a different test method is used, the permittee may utilize standard test plates with known coefficients of friction to correlate skid resistance results to California Test Method 342. These test plates are available from each Caltrans District Materials Engineer.

If the steel plate is permanently deformed without loading to at least 1.2 cm (1/2 in), (0.04 ft) per 2.5 meter length (8 ft), the Contractor shall remove and replace the plate.

A Rough Road Sign (W33), with black lettering on an orange background, may be used in advance of steel plate bridging. This sign is to be used along with any other required construction signing.

The Contractor shall be responsible for maintenance of the steel plates, shoring, and asphalt concrete ramps.

The Contractor shall be responsible for restoring all temporary and permanent striping, markings, and markers that have been damaged due to trench excavation or related operations.

Payment for temporary bituminous resurfacing, steel plates, fencing, and other related work to secure the trench shall be considered as included in the contract price paid for the various related items of underground construction. Payment for temporary and permanent striping, markings, and markers restoration shall be considered as included in the contract price paid for Traffic Striping, Pavement Markings, and Pavement Markers.

Subsection 306-6.1, "General," of the Standard Specifications, shall be deemed revised to include the following:

> Sand used for bedding shall be free from clay or organic material, suitable for the purpose intended, and shall be of such size that 90 percent to 100 percent will pass a 4.75 mm (No. 4) sieve and not more than 5 percent will pass a 75 μm (No. 200) sieve.
>
> Bedding shall be densified to not less than ninety (90) percent relative compaction. The Contractor shall make provisions for the City to take a compaction test at the spring line (half the diameter of the pipe measured vertically), or lower at the discretion of the Engineer, and at the top of the bedding.

Subsection 306-12.1, "General," of the Standard Specifications, shall be deemed revised to include the following:

> When the depth of cover of the top pipe or cable is less than 760 mm (30 in), the top 610 mm (24 in) of backfill measured from the surface shall be compacted to ninety-five (95) percent relative compaction. The Contractor may elect to use trench backfill slurry per Subsection 201-1 or CLSM per Subsection 201-6, as approved by the Engineer.

Subsection 306-12.1, "General," of the Standard Specifications, shall be deemed revised to read as follows:

> Regardless of the method of densification, backfill material shall not be placed against any reinforced concrete structure until the structure has been inspected and approved for backfilling by the Engineer.

The Contractor may place fill or backfill against or over the top of any cast-in-place structure in accordance with Table 306-1.3.1 (A) only after the concrete has developed eighty (80%) percent of its design strength or is approved by the Engineer. No traffic will be permitted on the top of any cast-in-place concrete structure, until the concrete in the structure has attained its design strength.

Subsection 306-12.1, "General," of the Standard Specifications, shall be deemed revised to include the following:

All backfill and bedding around structures shall be compacted to not less than ninety percent (90%) relative compaction. Where such material is placed under paved roadways, the top three feet measured from the finished subgrade shall be compacted to ninety-five percent (95%) and shall be compacted by Mechanical compaction. Densification of backfill above the bedding by flooding and jetting will not be allowed. Compaction tests may be taken at the trench bottom shown on the profile and at the discretion of the Engineer.

Backfill material placed above the bedding shall consist of processed miscellaneous base or 1 ½ sack cement slurry for paved areas, as approved by the Engineer. Backfill material placed above the bedding shall consist of select material from the excavation and imported material for unpaved areas, as approved by the Engineer.

The Contractor shall make provision and provide access to all trenches for the Engineer's representative to perform relative compaction tests and any other work as required at various levels and locations. All relative compaction tests will be made by the Engineer or representative in conformance with ASTM D1557.

Subsection 306-12.3, "Mechanically Compacted Trench Backfill," of the Standard Specifications, shall be deemed revised to include the following:

Densification of backfill shall be mechanically compacted by means of tamping rollers, or other mechanical tampers. Impact-type pavement breakers (stompers), freefall or stomping equipment will not be permitted unless otherwise approved by the Engineer. Densification of backfill by flooding or jetting shall not be allowed.

All backfill material for structures shall be placed in horizontal, uniform layers, and shall be brought up uniformly on each side of the structure. The thickness of each layer of backfill shall not exceed 203 mm (8 in) before compaction unless otherwise approved by the Engineer.

Approval to use specific methods and compaction equipment shall not be construed as guaranteeing or implying that the use of such methods and equipment will not result in damage to adjacent ground, existing improvements, or improvements installed under the Contract, nor shall it be construed as guaranteeing proper compaction. The Contractor shall make his own determination in this regard.

Subsection 306-12.4, "Jetted Trench Backfill," and Subsection 306-12.4.2, " Compaction Requirements," of the Standard Specifications, shall be deemed revised regarding the percent relative compaction as follows:

1. Ninety percent (90%) relative compaction;
2. Ninety-five percent (95%) relative compaction.

Payment for trench excavation, bedding and backfill shall be considered as included in the contract price paid for the various related items of work and no additional compensation shall be allowed therefor.

TRAFFIC STRIPING, PAVEMENT MARKINGS, AND PAVEMENT MARKERS

The Contractor shall replace all existing traffic striping, pavement markings, and pavement markers that are removed or damaged during the installation of the Line K-1 improvements.

Painted traffic stripes (lane lines and speed limit markings) and applying thermoplastic pavement markings (word and symbol markings, limit lines, crosswalk, etc.) shall conform to the provisions in Section 84, "Markings," of the State Standard Specifications and these Special Provisions.

Section 84-2.02C, "Paint," of the State Standard Specifications is amended to read:

	State Specification No.
Rapid Dry Water Base, Traffic Line.—White, Yellow and Black	PTWB-01

Section 84-2.02D, "Glass Beads," of the State Standard Specifications are amended to read:

> State Specifications for traffic paint and glass beads may be obtained from the Transportation Laboratory, 5900 Folsom Boulevard, Sacramento, CA 95819-4612, telephone number 916.227.7289.
>
> Glass beads shall conform to 1-ACOT type beads or equal.

The Contractor shall layout and “cat-track” the alignment of the proposed striping at 15 ft intervals and “spot” the proposed pavement markings as called for on the Plans. Striping shall vary no more than 2 inches in 50 ft from the specified alignment. The Engineer may waive minor variations.

The Contractor shall not proceed with the painting of any striping or applying thermoplastic pavement markings until the Engineer has checked and approved the cat-tracking and spotting, and has authorized the Contractor to proceed.

Traffic striping shall be applied with airless equipment. All traffic striping shall be performed with a road liner type striping machine. Where the configuration or location of a traffic stripe is such that the use of a road liner type striping machine is unsuitable, traffic paint and glass beads may be applied by other methods and equipment approved by the Engineer. The Engineer shall determine if the road liner type striping machine is unsuitable for a particular use.

The first coat of paint shall be applied upon completion of the surfacing. The second coat of paint shall not be applied until seven (7) calendar days after the first coat. Each coat of paint shall be applied at the wet film thickness of 10-12 mils for white and yellow paint and 7 mils for black paint. All paint shall be applied at a relative humidity below seventy-five percent (75%) and an ambient temperature above 13° C (55° F), unless otherwise approved by the Engineer.

Except for black paint, No. 1 reflective glass beads shall be uniformly incorporated in all coats of paint concurrently with the application of the paint. The glass beads shall be embedded in the coat of traffic paint being applied to a depth of at least one-half their diameters. The reflective glass beads shall be applied to the first coat of paint at the rate of 1.5 lb of beads per 0.26 Gal of paint, and to the second coat of paint at the rate of 2 lb of beads per 0.26 Gal of paint.

Except as directed by the Engineer, all angle points shall be painted as a smooth, tangent curve with a radius and length as approved in the field.

Temporary tape or reflective markers utilized for the purposes of interim delineation for centerline, lane lines, and crosswalk lines shall be placed to the side of the final striping pattern in such a way so that it will not interfere with the first coat of paint. All temporary tape and reflective markers applied for the purpose of interim delineation shall be removed by the Contractor at no additional cost to the City upon completion of the first coat of striping and prior to the final striping.

Stencils used for pavement markings must conform to the latest Caltrans approved Metric Stenciling Standards.

Newly painted or existing striping or applied thermoplastic pavement markings which are damaged as a result of the construction, including wheel markings by public traffic and the construction equipment, shall be repainted or thermoplastic replaced, and any associated removals shall be performed as outlined in these Special Provisions at the sole expense of the Contractor and no separate compensation will be allowed therefor.

Existing traffic striping and pavement markings that do not conform to the approved Plans shall be removed by wet sandblasting. Other methods may be requested by the Contractor, but shall be submitted in writing to the Engineer for approval. Blackout of existing traffic striping or pavement markings, which do not conform to the approved Plan, shall not be allowed.

Painting traffic stripes and applying of thermoplastic pavement markings shall not be separately measured.

Full compensation for all costs involved in Traffic Striping, Pavement Markings, and Pavement Markers including furnishing all labor, materials, tools, equipment, and incidentals for doing all the work involved in painting traffic striping and applying thermoplastic pavement markings shall be considered as included in the contract prices paid for the various items of work involved and no additional compensation will be allowed therefor.

BID ITEMS OF WORK

MOBILIZATION

Mobilization shall consist of preparatory work and operations, including but not limited to, those necessary for the movement of personnel, equipment, supplies, and incidentals to the project site; for the establishment of all offices, buildings, construction yards, sanitary facilities, and any other facilities necessary for work on the project; and for all other work and operations which must be performed or costs incurred prior to beginning work on the various contract items on the project site, as well as the related demobilization costs anticipated at the completion of the project. The cost of all bonds and insurance policies, including premiums and incidentals, shall be included in Mobilization.

No additional compensation will be allowed for additional mobilizations required, including but not limited to, delays caused by the relocation of existing utility facilities shown on the plans or discovered during construction operations.

The amount credited for Mobilization on each monthly progress payment shall be based upon the percentage of the total of the amounts credited for work on all the other contract items for that monthly progress payment, up to a cumulative limit of eighty (80) percent of the contract item price for Mobilization. The remaining twenty (20) percent of the contract item price for Mobilization shall be paid with the final progress payment.

Payment

The deletion of work or the addition of extra work as provided for herein shall not affect the price paid for Mobilization.

The contract lump sum price paid for mobilization shall include full compensation for furnishing all labor, materials, tool, equipment, the cost of all bonds and insurance policies, and incidentals, and for doing the work involved in mobilization as specified herein.

ENVIRONMENTAL MITIGATIONS

A US Fish and Game 1602 permit, an Army Corps Section 404 permit, and a Clean Water Act Section 401 permit are included in the Bid Documents and are part of these Contract Documents. The Contractor shall adhere to the terms of the permits.

A copy of each permit, and any subsequent amendments or updates, shall be on the job site at all times during construction and shall be made available to the Engineer or regulatory agency personnel upon request. The Contractor shall provide a copy of the permits to all onsite subcontractor(s) and foreperson(s). The Contractor shall require that all such subcontractor(s) and foreperson(s) read the permits in their entirety prior to initiation of the project and ensure that all appropriate permit conditions are implemented as intended. The Contractor shall provide the Engineer written confirmation of this requirement prior to initiating construction activities, with the Contractor's/Subcontractor's signature, Contractor's/Subcontractor's license number, phone number, and address included on the confirmation.

The Contractor shall allow representatives from the regulatory agencies to inspect records and the authorized activity at any time deemed necessary and shall allow the regulatory agencies to

photograph, sample, and/or monitor the work for the purpose of assuring compliance with the permits.

Contractor is to adhere to all permit requirements pertaining to construction activities. The Contractor shall adhere to the City of Moreno Valley Municipal Code noise ordinance requirements and the following:

Construction activities shall be operated in a manner that limits noise impacts on surrounding uses (South Coast Air Quality Management District Rule 403). In order to limit noise impacts on surrounding property, the Contractor shall ensure the following:

a. Noise generating equipment shall be shielded from nearby noise-sensitive receptors by noise attenuating buffers such as structures or haul truck trailers.

b. Water tanks and equipment storage, and warm-up areas shall be located as far from noise-sensitive receptors as possible.

c. All construction equipment powered by gasoline or diesel engines shall be required to have sound-control devices at least as effective as those originally provided by the manufacturer; no equipment shall be permitted to have an un-muffled exhaust.

d. Mobile noise generating equipment and machinery shall be shut off when not in use.

e. Construction vehicles accessing the site shall be required to use the shortest possible route to and from local freeways.

f. Construction traffic routes are limited to Truck Routes as listed on the City's website. Residential streets are off limits to construction trucks, employees and suppliers.

g. Hauling route to be approved by the Engineer 10 days prior to schedule of any hauling for the project.

h. Contractor shall make appropriate project staff members available for notification of noise complaints by residents.

i. Changeable Message Signs (CMS) shall not be placed adjacent to residential properties.

All notifications and communications to resource/permitting environmental agencies shall be channeled through the Engineer.

Payment

Payment for "**Environmental Mitigations Per Special Provisions**" shall be made on a unit price paid per lump sum (LS) basis as specified in the Bid Schedule, which shall include full compensation for furnishing all labor (including paying for any qualified biologist, qualified archaeologist, and qualified hazardous materials specialist), materials, tools, equipment, and incidentals for doing all work involved to meet specified requirements for the mitigation of biological resources, air quality, cultural resources, noise, and hazardous materials, identified above and no additional compensation shall be allowed therefor.

Payment for mitigation of stormwater, as identified herein, shall be considered included in lump sum price bid for Stormwater and Non-Stormwater Pollution Control as specified in the Stormwater and Non-Stormwater Pollution Control Specifications no additional compensation shall be allowed therefor.

STORMWATER AND NON-STORMWATER POLLUTION CONTROL

The Contractor shall conform to Section 13, "Water Pollution Control", of the State Standard Specifications and these Special Provisions.

Payment

Payment for **"Stormwater and Non-Stormwater Pollution Control"** will be made on a unit price paid per lump sum (LS) basis as specified in the Bid Schedule which shall include full compensation for furnishing all labor, materials, tools, equipment, and incidentals for doing all the work involved in developing, preparing, obtaining approval of, revising, and amending the Permit Registration Documents (PRDs), and installing, constructing, maintaining, removing, and disposing of BMPs as shown in the SWPPP, as specified in the CASQA Handbooks and Sample Contractor's Water Quality CSMP, General Permit, the State Standard Specifications, and these Special Provisions, and as directed by the Engineer.

The Contractor shall not be paid any portion of the contract lump sum if discharge of groundwater from dewatering activities to surface waters is avoided.

Any BMP required to protect storm water quality shall be installed within 24 hours of the time the Contractor is notified by the Engineer or regulatory agencies, or prior to the next rain event, whichever comes first, to install such BMP's. Each 24 hour period elapsed without installation of the required BMPs by the Contractor will be considered an Incident. Failure of the Contractor to meet the 24 hour period for installing the required BMPs will result in a permanent payment deduction of $500 for each Incident that the Contractor fails to comply, in addition to any other applicable penalties. It is the Contractor's responsibility to install any and all required BMPs.

Monthly payment will be made on a basis of the percentage of work completed on the entire project and subject to the submittal of a complete Monthly Report as specified in Section 29.11(b). Failure to complete or report required visual inspections, monitoring, sampling, and analysis requirements, NAL Exceedance Reports, and/or other necessary follow-up actions to ensure that the project stays in compliance with the General Permit can be the basis for reducing monthly progress payments for the project. Monthly progress payments will be reduced by the amount of direct costs, overhead costs, and engineering costs incurred by the Engineer to address compliance deficiencies, including costs to conduct inspections, monitoring, reporting, and supplemental BMP implementation necessary to comply with the General Permit and costs incurred by the Engineer to address complaints, additional State inspections and violations and/or fines issued by the State or US EPA associated with failure to properly comply with the General Permit. Progress Payment reductions can exceed the monthly percentage or total contract lump sum price for Stormwater and Non-Stormwater Pollution Control work.

CALVARY CHAPEL WORK

Contractor to comply with these requirements when working within or near the Calvary Chapel of Moreno Valley Property:

a. Contractor shall install Caltrans Type CL-6 or equivalent fencing at all times during the construction of the project on the northern, eastern and western portion of the Property along Ironwood Avenue. The Caltrans Type CL-6 or equivalent fencing shall be installed and maintained by the Contractor to provide a physical barrier between the construction zone and the adjacent areas being utilized by the students and staff of Calvary Chapel of Moreno Valley School at all times during construction.

b. Contractor shall only access the Property from public right of way and in connection with the exercise of any of the easement rights during the construction of the project on the southern portion of the Property along Ironwood Avenue and will not trespass through the remainder of the Property.

c. Contractor shall maintain ingress and egress to the Property at all times during the construction of the project.

d. Contractor to suspend work on the Calvary Chapel Property during the period of the church's fall festival activities, October 20 - 31st. If construction activities commence prior to this period of time, Contractor will have temporary fencing erected for public safety and the temporary fences would remain in place during the festival.

Payment

Payment for "**Miscellaneous Calvary Chapel Work**" will be made on a unit price paid per lump sum (LS) basis as specified in the Bid Schedule, which shall include full compensation for furnishing all labor materials, tools, and equipment, and doing all the work involved to meet the requirements as set forth in these Special Provisions and Right of Entry Agreement in the Bid Documents.

BUILDER'S RISK INSURANCE

The Project is located in an active flood control channel that is susceptible to flash floods during the project construction duration; therefore, the Contractor shall purchase and maintain Builder's Risk Insurance for the Project. Such property insurance for active work within a live flood control facility shall cover costs of labor, materials and equipment required for the Work and intended to be permanently installed and incorporated into the Project covering the interest of the Owner, Contractor, and all Subcontractors in such labor, materials and equipment. Such insurance shall be written on an "All-Risk" basis, or equivalent policy form, covering perils normally covered on such insurance including, but not limited to, the perils of fire (with extended coverage) and physical loss or damage, including, without duplication of coverage, theft, vandalism, malicious mischief, collapse, design error, earthquakes of a magnitude in excess of 3.5 of the Richter Scale, tidal waves, faulty workmanship or materials, floods, windstorms, falsework testing and startup, and debris removal including demolition occasioned by enforcement of any applicable legal requirements, and shall cover reasonable compensation for design, inspection, testing, expediting, fire department, flood control district, plans, blueprints, drawings, project management and services, and expenses required as a result of such incurred loss. The Contractor's property insurance policy will have a basic $25,000.00 deductible per occurrence for flood and extended coverage (damage to rented premises); other deductibles may apply to other types of losses. In case of loss, Contractor shall be responsible for each loss payable under the Builder's Risk policy attributable to the acts, errors or omissions of Contractor, its Subcontractors, Sub-subcontractors and any other entity for whom Contractor may be

responsible. Coverage shall be in the amount of the initial Contract Price, plus the value of subsequent Change Orders and cost of materials supplied or installed by others, comprising total value for the entire Work at the Site on a replacement cost basis (including code upgrades) without optional deductibles. Such property insurance shall be maintained until final payment has been made or until no person or entity other than the City has an insurable interest in the property required by this Paragraph to be covered, whichever is later.

Payment

Payment for "**Builder's Risk Insurance**" will be made on a unit price paid per lump sum (LS) basis as specified in the Bid Schedule, which shall include full compensation for all labor and costs of providing Builder's Risk Insurance with coverage amount that includes the initial Contract Price and the value of subsequent Change Orders.

CLEARING, GRUBBING AND REMOVALS

Clearing and grubbing shall be performed in accordance with the Plans, Subsection 300-1, "Clearing and Grubbing," of the Standard Specifications and these Special Provisions, and shall include, but not be limited to, the following:

1. Removal and disposal of tree stumps, shrubs, ground cover, and other vegetative material.

2. All trees and shrubs less than 10 ft directly above the entire sidewalk surface shall be trimmed and removed by the Contractor to allow a clear path of travel for pedestrians.

3. Removal and disposal of decorative landscape rocks, edging, brick, pavers, railroad ties, or any other decorative landscape treatments.

4. Removal and disposal of boulders, rock or Portland Cement Concrete (PCC).

5. Removal and disposal of signs, poles, and posts, including foundations. Holes resulting from removal of existing poles and posts shall be filled or patched with like materials.

6. Existing inlets, slotted drains, drainage pipes, bulkheads, drop inlet structures, and where any portion of such structure is within 3 ft of the grading plane in the excavation areas, or within 1 ft of original ground in embankment areas, or where shown on the Plans to be removed, shall be completely removed and disposed of accordingly.

7. Removal and disposal of existing drainage inlet structure, catch basins, and PCC Local Depression or asphalt concrete (AC) apron.

8. Any and all saw cutting.

9. Removal and disposal of existing AC berms, miscellaneous AC, and PCC.

10. Removal of all curb and gutter, retaining curb, cross gutters, and spandrels shall be replaced within three (3) calendar days. The AC patch shall be placed within two (2) working days after the curb and gutter, cross gutters, and spandrels are replaced. Removal of all sidewalks shall be replaced within three (3) calendar days.

11. Removal and disposal of any abandoned utilities that may interfere with the improvements, including plugging of pipes or conduits.

12. Removal and disposal of steel vent pipe of the abandoned waterline or irrigation line, and cap three (3) feet below grade.

13. Removal and disposal of banner poles and footings.

14. Removal, relocation, and disposal of existing bus shelter benches and structures as noted on the project Plans.

15. Removal and disposal of all raised pavement markers not conforming to the approved plan or conflicting with the proposed striping as shown on the Plans in accordance with Subsection 314-2, "Removal of Traffic Striping and Curb and Pavement Markings," of the Standard Specifications.

16. Removal and disposal of existing striping conflicting with Stage Construction temporary striping.

17. The Contractor shall dispose of all materials not being salvaged outside of the right of way and shall pay for all costs of disposal. These materials include, but are not limited to, masonry walls, AC paving, PCC, and conflicting striping.

18. Irrigation system relocation. Any irrigation systems in conflict with the proposed improvements that are removed, damaged, disturbed, or broken shall be modified, repaired, and/or replaced to be operable and provide full irrigation coverage to the areas requiring irrigation using new materials, equal or better than the original materials, with 3/4 in Schedule 40 PVC being the minimum acceptable for underground lines and 1/2 in Schedule 80 being minimum acceptable for risers and with the systems not being out of operation for more than two (2) days.

19. Removal of abandoned street light and signal pole foundations complete and including backfill of the site with material of similar consistency as the native material.

    All trees, shrubbery and lawns deprived of normal irrigation watering due to a disruption of service caused by the Contractor's operations shall be regularly and thoroughly irrigated by the Contractor so that said plantings will not be damaged. If any trees, shrubbery or lawns die or suffer unacceptable damage as a result of or precipitated by the Contractor's operations, the Contractor shall replace same with the same plant species and size. Existing grass lawns within areas that must be excavated and/or re-graded shall be cut into approximate1 ft squares, removed, protected, cared for, and replaced as soon as possible. Dead, dying, and unacceptably damaged grass shall be replaced with new grass sod.

    Stockpiling of materials within the right of way, city parking lots, or other city improved property shall not be allowed unless otherwise approved by the Engineer.

20. Cleaning of all under-sidewalk drain pipes.

21. Self-propelled drop hammers will not be allowed for removals.

PCC, AC, trees, and green waste that have been removed shall be disposed of at a recycling plant. The Contractor shall provide the City with the weight certification of recycling and the required monthly Solid Waste Disposal and Recycling Reports.

Payment

Payment for "**Clearing, Grubbing and Removals**" will be made on a unit price paid per lump sum (LS) basis as specified in the Bid Schedule, which shall include full compensation for all costs involved in removal and recycling of PCC and AC removed from the project site shall be considered as included in the price paid for Clearing, Grubbing, and Removals for furnishing all labor, materials, tools, equipment, hauling, and incidentals, and no additional compensation will be allowed therefor.

Payment for Clearing, Grubbing, and Removals shall be on a lump-sum basis and shall include full compensation for furnishing all labor, materials, tools, equipment, reports, and incidentals for doing all work involved for all the items specified herein and in Subsection 300-1.4, "Payment," of the Standard Specifications and no additional compensation shall be allowed. Payment will be made on a basis of the percentage of work completed for this bid item.

If the Contractor does not provide the weight certification of recycling and the required monthly Solid Waste Disposal and Recycling Reports, then the portion of payment for Clearing, Grubbing, and Removals will be withheld until the weight certification and reports are provided.

REMEDIAL GRADING

Remedial Grading shall be completed in accordance with Subsection 300-2, "Unclassified Excavation," of the Standard Specifications and these Special Provisions. The limits of remedial grading shall extend to the levels as shown on the Plans in the areas to receive unclassified fill and any other improvements. The following remedial grading requirements shall be implemented as shown on the Plans:

a. Access Ramp
b. Temporary Access Road
c. Final Grading per Plans

Payment

Payment for "**Remedial Grading**" will be made on a unit price paid per lump sum (LS) basis as specified in the Bid Schedule, which shall include full compensation for furnishing all labor, materials, tools, equipment, and incidentals for doing all work involved for all excavation or fill, loading, hauling, depositing, spreading, recompacting soils, and any other grading required to complete the Line K-1 Work as shown, required and/or implied in the Contract Documents, and no separate or additional compensation will be allowed therefor.

EROSION CONTROL HYDROSEED

Furnishing and installing erosion control hydroseed, and payment therefor shall conform to Section 21, "Erosion Control", of the State Standard Specifications, the details shown on the Plans, and these Special Provisions.

Payment

Payment for **"Erosion Control Hydroseed Per Special Provisions"** will be made on a unit price paid per square foot (SQFT) basis as specified in the Bid Schedule, which shall include full compensation for furnishing all labor, materials, tools, equipment, and incidentals, and for doing all the work involved in erosion control hydroseeding, complete in place, including achieving minimum germination and plant establishment rate, maintenance, and as specified in the State Standard Specifications, these Special Provisions, and as directed by the Engineer. Erosion control hydroseed on haul routes, at the staging area, and all other areas of disturbed soil due to the Contractor's operation is considered as included in the other various items of work and no separate payment will be made therefor.

The quantity of erosion control hydroseeding will be measured by the square foot as determined from actual slope measurements of the areas covered by the erosion control hydroseeding.

HEADWALL/WINGWALL STRUCTURE

Headwall/Wingwall structure shall conform to the requirements of "Concrete Drainage Structures" of these Special Provisions, the Plans, State Standard Plans, State Standard Specifications and direction from the Engineer.

Payment

Payment for "**Construct Headwall/Wingwall Structure Per Plan**" will be made on a unit price paid per unit each (EA) basis as specified in the Bid Schedule, which shall include full compensation for furnishing all materials, labor, tools, equipment and incidentals, including but not limited to, furnishing all transportation, hauling, excavation, backfill, reinforcing steel, installing, finishing, and protecting, complete in place, in accordance with the standard specifications and the these Special Provisions and no additional compensation shall be made therefor.

REINFORCED CONCRETE BOX (RCB)

Reinforced concrete box (RCB) shall conform to the requirements of "Concrete Drainage Structures" of these Special Provisions, the Plans, State Standard Plans, State Standard Specifications and direction from the Engineer.

Payment

Payment for "**Construct 7' W x 7' H Reinforced Concrete Box (RCB) Per Caltrans Std. D80**" will be made on a unit price paid per linear foot (LF) basis as specified in the Bid Schedule, which shall include full compensation for furnishing all materials, labor, tools, equipment and incidentals, including but not limited to, furnishing all transportation, hauling, excavation, backfill, reinforcing steel, installing, finishing, and protecting, complete in place, in accordance with the standard specifications and the these Special Provisions and no additional compensation shall be made therefor

TRANSITION STRUCTURE

Transition structures shall conform to the requirements of "Concrete Drainage Structures" of these Special Provisions, the Plans, State Standard Plans, State Standard Specifications and direction from the Engineer.

Payment

Payment for "**Construct Transition Structure Per RCFC&WCD Std. TS301**" will be made on a unit price paid per unit each (EA) basis as specified in the Bid Schedule, which shall include full compensation for furnishing all materials, labor, tools, equipment and incidentals, including but not limited to, furnishing all transportation, hauling, excavation, backfill, reinforcing steel, installing, finishing, and protecting, complete in place, in accordance with the standard specifications and the these Special Provisions and no additional compensation shall be made therefor.

MANHOLE

Manhole shall conform to the requirements of "Concrete Drainage Structures" of these Special Provisions, the Plans, RCFC&WCD Standard Plans, State Standard Specifications, and direction from the Engineer.

Payment

Payment for "**Construct Manhole Per RCFC&WCD Std. MH252**" will be made on a unit price paid per unit each (EA) basis as specified in the Bid Schedule, which shall include full compensation for furnishing all materials, labor, tools, equipment and incidentals, including but not limited to, furnishing all transportation, hauling, excavation, backfill, reinforcing steel, installing, finishing, and protecting, complete in place, in accordance with the standard specifications and the these Special Provisions and no additional compensation shall be made therefor.

GRATING CATCH BASIN

Catch Basins shall conform to the requirements of "Concrete Drainage Structures" of these Special Provisions, the Plans, Standard Plans, and the direction by the Engineer.

Payment

Payment for "**Construct Grating Catch Basin Per APWA Std. 305-3**" will be made on a unit price paid per unit each (EA) types of Catch Basins listed on the Bid Schedule, shall include full compensation for furnishing all materials, labor, tools, equipment and incidentals, including but not limited to, furnishing all transportation, hauling, excavation, backfill, frames, and grates, reinforcing steel, installing, finishing, and protecting, complete in place, in accordance with the standard specifications and the these Special Provisions and no additional compensation shall be made therefor.

CORRUGATED METAL PIPE

Pipe materials and dimensions shall conform to AASHTO Designation: M-36. The Engineer shall be furnished a "Certificate of Compliance" signed by the manufacturer stating that the pipe conforms to the designated specifications.

Separate sections of corrugated metal pipe shall be laid in the trench with outside laps of circumferential joints facing up grade. Pipe shall have full bearing, and variation form slope between the sections after assembly shall not exceed ½ inch.

Steel thicknesses noted on the Plans are after galvanizing. Galvanizing shall conform to Subsection 75-1.02B of the State Standard Specifications.

Portland Cement Concrete (PCC) Collar shall be constructed in accordance with the Plans, RCFC&WCD Standard Plans (Drawing No. M803), and as approved by the Engineer. Included in this item are concrete, reinforcing steel, and appurtenances required for the construction of Concrete Collar, complete in place.

Payment

Payment for "**Construct 72" Corrugated Metal Pipe**" will be made on a unit price paid per linear foot (LF) basis as specified in the Bid Schedule, which shall include full compensation for furnishing all materials, labor, tools, equipment and incidentals, and for doing all the work involved in supplying and installing corrugated metal pipe, complete in place, including but not limited to excavation, bedding materials, rubber seals, concrete cradles on existing utilities, concrete collars and reinforcement, backfill, and compaction, as shown on the Plans, per these Special Provisions, and as directed by the Engineer, and no additional compensation shall be allowed therefor.

REINFORCED CONCRETE PIPE (RCP)

The Contractor shall pothole the storm drain mainline before trenching and laying the storm drain to avoid conflicts with underground utilities and laterals.

Reinforced concrete pipe (RCP) shall be in conformance with Subsection 207-2, "Reinforced Concrete Pipe (RCP)," and Subsection 306-1 "General" of the Standard Specifications.

Subsection 207-2.1, "General," of the Standard Specifications, the fifth paragraph, shall be deemed revised to include the following:

> "Plants and processes shall be qualified by Riverside County Flood Control and Water Conservation District (RCFC&WCD)."

Subsection 207-2.2 "Materials" of the Standard Specifications shall be deemed revised to include the following:

> The Engineer shall be furnished a "Certificate of Compliance," signed by the manufacturer of the pipe certifying that the pipe conforms to the ASTM requirements. All pipe and pipe material supplied by the Contractor shall be new.

D-load bearing strength test for new pipe is required, in conformance with Subsections 207-2.9.1, "General" and 207-2.9.2, "D-load Bearing Strength Test," of the Standard Specifications, as a basis for acceptance of the pipe. The test shall be performed in the presence of the Engineer.

Pipe shall be laid in a trench free of ponded water in conformance with Subsection 306-5, "Dewatering," with joints in conformance with Subsection 306-7.3.2, "Joints," of the Standard Specifications, and the following:

> Pipe ends shall be cleaned and moistened prior to making up the joint.

Unsymmetrical closure of pipe joints shall not exceed 1 inch pull on the outside of the curve when pull is measured at the springline on the inside of the pipe. Mortar joints on curves shall conform in strength, texture of mortar finish, and tightness to the joints for straight ended pipe.

When beveled pipe is used the maximum deflection angle shall not exceed 6 degrees unless shown on the Plans or approved by the Engineer.

Portland Cement Concrete (PCC) Collar shall be constructed in accordance with the Plan, Riverside County Flood Control and Water Conservation District Standard Drawing Number M821, and as approved by the Engineer. Included in this item are concrete, reinforcing steel, and appurtenances required for the construction of Concrete Collar, complete in place.

One (1) sack slurry backfill shall be required where RCP mainline and laterals cross existing major utility crossings where compaction is not possible (i.e. multiple conduits). Payment for one (1) sack slurry backfill shall be considered to be included in various items of storm drain work, and no additional compensation will be allowed therefor.

Payment

Payment for "**Construct 48" and 90" Reinforced Concrete Pipes (D-Load Profile)**" will be made on a unit price paid per linear foot (LF) basis, of the type(s) listed in the Bid Schedules, shall include full compensation for all materials, labor, tools, equipment and incidentals, and for doing all the work involved in supplying as and installing reinforced concrete pipe, complete in place, including but not limited to excavation, trench shoring, bedding materials, concrete collars and reinforcement, backfill, and compaction, as shown on the Plans, per these Special Provisions, and as directed by the Engineer, and no additional compensation will be allowed therefor.

AGGREGATE BASE

Aggregate base shall conform to the requirements of Subsection 200-2.2, "Crushed Aggregate Base," or Subsection 200-2.4, "Crushed Miscellaneous Base," and Subsection 301-2, "Untreated Base," of the Standard Specifications and these Special Provisions.

Add to Subsection 200-2.4.1, "General," of the Standard Specifications the following:

> Disintegrated granite, glass, porcelain, brick, wood, steel (reinforcing, nails, etc) or slag, shall not be used for aggregate base. If any detrimental material or deleterious substance is found, it shall be cause for rejection and be removed from the site.

Add to Subsection 200-2.4.2, "Grading," of the Standard Specifications the following:

> Grading or blending of the material shall be done through a screening process.

Add to Subsection 301-2.1, "General," of the Standard Specifications the following:

> Untreated base material shall be either crushed aggregate base as specified in Subsection 200-2.2 of the Standard Specifications, or crushed miscellaneous base as specified in Subsection 200-2.4 of the Standard Specifications.

Add to the second paragraph of Subsection 301-2.2, "Spreading," of the Standard Specifications, as follows:

> Tailgate spreading by dump truck will not be permitted except for spot dumping and in areas not readily accessible to spreading equipment.

Payment

Payment for "**Construct 6" Class 2 Aggregate Base Over 95% Compacted Subgrade (0.5' Thick)"** will be made on a unit price paid per cubic yard (CY) basis as specified in the Bid Schedule, which shall include all labor, equipment, materials, and incidentals necessary to furnish, construct, and place aggregate base and other related Line K-1 Work complete, as indicated on the Plans and as specified. No payment will be made for material placed beyond its designed template and longitudinal limits

ASPHALT CONCRETE PAVEMENT

Asphalt concrete shall meet the requirements of Subsection 203-6 and Section 302-5 of the Standard Specifications and these Special Provisions:

> Asphalt concrete shall be Type III-B2-PG 64-10 for base course and Type III-C3-PG 64-10 for surface course.
>
> The Contractor is to construct all AC sidewalks, access ramps, and gutters in accordance with American Disability Act (ADA) Standards / California Code of Regulations (CCR) Title 24 – Accessibility Regulations and the latest edition of applicable City Standard Plans. The Contractor shall ensure that all newly constructed AC improvements comply with ADA Standards / CCR Title 24 – Accessibility Regulations and the latest edition of applicable City Standard Plans for cross slope and slope percentage requirements. The Contractor shall measure access ramps, sidewalks, curb and gutter, etc. for compliance using a digital level, also known as an electronic level or "smart level" of two feet (2') or less in length.
>
> Access ramp cross slope shall be checked for the entire ramp width from back of curb to top of landing. Sidewalk cross slope shall be checked for entire sidewalk width, as well as longitudinally.

The individual test result requirements shall be as specified in Subsection 203-6.5.2, "Combined Aggregates and Reclaimed Asphalt Pavement (RAP)," of the Standard Specifications and the following:

> The combined aggregate grading for asphalt concrete placed on miscellaneous areas shall conform to the gradation for the asphalt concrete placed on the traveled way, unless otherwise directed by the Engineer.

Add to Subsection 203-6.2.1, "Asphalt Binder," of the Standard Specifications, the following:

> The amount of asphalt binder used in the asphalt concrete placed in dikes, gutters, gutter flares, oversize drains and aprons at the ends of drainage structures, unless otherwise directed by the Engineer, shall be increased one per cent (1%) by weight of

the aggregate over the amount of asphalt binder used in the asphalt concrete placed on the traveled way.

The asphalt concrete to be placed in areas which are designated on the Plans as miscellaneous areas may be spread in one layer. The material shall be compacted to the required lines, grades and cross section.

Miscellaneous asphalt concrete replacement shall be constructed as shown on the Plans. Miscellaneous replacement areas shall be a minimum of 75 mm (0.25 ft) thick, and shall be placed on subgrade which has been compacted to 95% relative compaction. Payment for construction of said areas shall be included in the unit price paid per tonne (ton) for asphalt concrete and shall include full compensation for furnishing all labor, materials, tools, equipment, and incidentals, and no additional compensation will be allowed therefore.

Profilograph of the base paving or existing pavement surface and of the asphalt concrete overlay or the final pavement surface shall be in accordance with Profilograph Asphalt Concrete Pavement.

If the finished surface of the asphalt concrete on the traffic lanes does not meet the specified surface tolerances, it shall be brought within tolerances by either: (1) abrasive grinding (followed by fog seal coat on the areas which have been ground), (2) placing an overlay of asphalt concrete, or (3) removal and replacement. The method shall be selected by the Engineer. In accordance with Profilograph Asphalt Concrete Pavement, a profilograph shall be done in the presence of the Engineer for all corrective work.

Replace the second paragraph of Subsection 302-5.4, "Tack Coat," of the Standard Specifications, with the following:

A similar tack coat shall be applied to all surfaces that are to be overlaid unless otherwise directed by the Engineer.

Add to Subsection 302-5.5, "Distribution and Spreading," of the Standard Specifications, the following:

Tarpaulins shall be used to cover all loads when directed by the Engineer.

In advance of spreading asphalt concrete over asphalt concrete base course, or asphalt concrete surface, asphalt concrete leveling course shall be spread by any mechanical means that will produce a uniform smoothness and texture. Asphalt concrete leveling shall include, but is not limited to, the filling and leveling of irregularities and ruts. Asphalt concrete used to change the cross slope or profile of an existing surface shall not be considered as asphalt concrete leveling.

Unless otherwise permitted by the Engineer, the top layer of asphalt concrete for shoulders, tapers, transitions, road connections, private drives, curve widening, turnouts, left-turn pockets, and other such areas, shall not be spread before the top layer of asphalt concrete for the adjoining through lane has been spread and compacted. At locations where the number of lanes are changed, the top layer for the through lanes shall be paved first. Tracks or wheels of spreading equipment shall not be operated on the top layer of asphalt concrete in any area until final compaction has been completed or unless directed by the Engineer.

The base layer of asphalt concrete shall not be less than 60mm (0.20 ft) and the top layer of asphalt concrete shall not exceed 60 mm (0.20 ft) in compacted thickness. Each lane of the top layer, once commenced, shall be placed without interruption.

All screed extensions for paving machines shall be provided with a tamper, roller, or other suitable compacting devices.

Asphalt pavers shall be equipped with automatic screed controls and a sensing device or devices. Automatic grade and slope control shall be used for overlays.

All joints shall be sealed after rolling.

When placing asphalt concrete to the lines and grades noted in the Plans or as approved by the Engineer, the automatic screed controls shall control the longitudinal grade and transverse slope of the screed. Grade and slope references shall be furnished, installed, and maintained by the Contractor. The Contractor shall use a ski device, the minimum length of the ski device shall be 10 m (30 ft.). The ski device shall be a rigid one-piece unit and the entire length shall be utilized in activating the sensor. The Contractor may use a laser to control the screed.

When placing the initial mat of asphalt concrete on existing pavement, the end of the screed nearest the center line shall be controlled by a sensor activated by a ski device not less than 10 m (30 ft) long. The end of the screed farthest from center line shall be controlled by an automatic transverse slope device set to reproduce the cross slope approved by the Engineer.

When paving contiguously with previously placed mats, the end of the screed adjacent to the previously placed mat shall be controlled by a sensor that responds to the grade of the previously placed mat and will reproduce the grade in the new mat within a 3 mm (0.01 ft) tolerance. The end of the screed farthest from the previously placed mat shall be controlled in the same manner as when placing the initial mat.

Should the automatic screed controls fail to operate properly during any day's work, the Contractor may use manual control of the spreading equipment for the remainder of that day; however, the equipment shall be corrected or replaced with alternative automatically controlled equipment conforming to the requirements in this section before starting the next day's work.

Should the methods and equipment furnished by the Contractor fail to produce a layer of asphalt concrete conforming to the requirements, including straightedge tolerance, of Subsection 302-5.6.2, "Density and Smoothness," of the Standard Specifications, the paving operation shall be discontinued and the Contractor shall modify his equipment or furnish substitute equipment.

A drop-off of more than 45 mm (0.15 ft) will not be allowed at anytime between adjacent lanes open to public traffic.

The Contractor shall schedule his/her paving operations such that each layer of asphalt concrete is placed on all contiguous lanes of a traveled way each work shift. At the end of each work shift, the distance between the ends of the layers of asphalt concrete on adjacent lanes shall not be greater than 3 m (10 ft) nor less than 1.52 m (5 ft). Additional asphalt concrete shall be placed along the transverse edge at the end of each lane and along the exposed longitudinal edges between adjacent lanes, hand raked, and compacted to form temporary conforms. Kraft

paper, or other approved bond breaker, may be placed under the conform tapers to facilitate the removal of the taper when paving operations resume.

Add to Subsection 302-5.6.1, "General (Rolling)," of the Standard Specifications, the following:

The Contractor shall furnish a sufficient number of rollers to obtain the specified compaction and surface finish required by the Standard Specifications and these Special Provisions.

Pneumatic rollers shall be required on lower layer only.

Initial breakdown compaction shall consist of a minimum of three (3) coverages of a layer of asphalt mixture. A pass shall be a movement of rolling in both directions over the same path. Coverage shall consist of as many passes as are necessary to cover the entire width being paved. Overlap between passes during coverage, made to ensure compaction without displacement of material in accordance with good rolling practice, shall be considered to be part of the coverage being made and not part of a subsequent coverage.

Each coverage shall be completed before subsequent coverages are started.

Add to the first paragraph of Subsection 302-5.6.2, "Density and Smoothness," of the Standard Specifications, the following:

The completed surfacing shall be thoroughly compacted, smooth and free from ruts, humps, depressions or irregularities. Any ridges, indentations or other objectionable marks left in the surface of the asphalt concrete shall be eliminated by rolling or other means. The use of any equipment that leaves humps, ridges, irregularities, indentations or other objectionable marks in the asphalt concrete shall be discontinued, and acceptable equipment shall be furnished by the Contractor.

The transverse slope of the finished surface shall be uniform to a degree such that no depressions greater than 3 mm (0.01 ft) are present when tested with a straightedge 3 m (10 ft) long, laid in a direction transverse to the center line.

If the test results for any lot of asphalt concrete indicate that the relative compaction is below 95.0 percent (95%), the Contractor will be advised that he is not attaining the required relative compaction and that his materials, procedures, or both, need adjustment. Asphalt concrete spreading operations shall not continue until the Contractor has notified the Engineer of the adjustment that will be made in order to meet the required compaction.

Add to Subsection 302-5.7, "Joints," of the Standard Specifications, the following:

Before placing the top layer adjacent to cold transverse construction joints, the joints shall be trimmed to a vertical face and to a neat line. Longitudinal joints shall be trimmed to a vertical face and to a neat line if the edges of the previously laid surfacing are, in the opinion of the Engineer, in such condition that the quality of the completed joint will be affected. Longitudinal and transverse joints shall be tested with a 3 m (10') straightedge and shall be cut back as required to conform to the provisions in

Subsection 302-5.6.2, “Density and Smoothness,” for surface smoothness. Connections to existing surfacing shall be feathered to conform to the provisions for smoothness.

Longitudinal joints in the top layer shall correspond with the edges of proposed traffic lanes (striping). Longitudinal joints in all other layers shall be offset not less than 150 mm (0.5 ft) alternately each side of the edges of traffic lanes.

All feathered joints shall be sealed after rolling.

During asphalt concrete paving operations, it shall be the Contractors responsibility to place protective covering over, or to otherwise avoid paving over survey markers, monuments, and benchmarks, and to remove said covering and/or asphalt concrete after paving operations have been completed.

Payment

Payment for “**Construct Asphalt Concrete (0.33’ Thick for Pavement and Miscellaneous Areas)**” will be made on a unit price paid per ton (TON) basis as specified in the Bid Schedule, which shall include full compensation for furnishing all labor, materials, tools, equipment and incidentals, and for doing all the work involved in constructing asphalt concrete complete in place, and no additional compensation will be allowed therefor.

ASPHALT CONCRETE BERM/CURB

Berms shall be shaped and compacted with an extrusion machine or other equipment capable of shaping and compacting the material to the required cross section.

In advance of placing berms on asphalt concrete pavement, the pavement surface shall be broom cleaned of all loose material and a tack coat shall be applied. The tack coat shall be in accordance with Section 302-5.4, "Tack Coat" of the Standard Specifications.

Payment

Payment for “**Construct 6” Asphalt Concrete Berm/Curb**” will be made on a unit price paid per linear foot (LF) basis as specified in the Bid Schedule, which shall include full compensation for furnishing all labor, materials, tools, equipment, and incidentals, and for doing all the work involved in constructing tack coat and asphalt concrete berms, and no additional compensation will be allowed. No separate payment will be made for the Asphalt Concrete used in constructing asphalt concrete berms.

CHAIN LINK FENCE INSTALLATION

Chain link fence installation shall conform to Subsections 206-6 and 304-3, “Chain Link Fence,” of the Standard Specifications, RCFC&WCD Standard Plans (Drawing No. M801), and as shown on the Plans. All materials and fittings supplied by the Contractor shall be new. Fence height and post spacing shall be in accordance to the RCFC&WCD Standard Plans. The Contractor shall place the chain link fence at the location shown on the Plans or as directed by the Engineer.

Payment

Payment for "**Provide and Install Chain Link Fence Per RCFC&WCD Std. M801**" will be made on a unit price paid per linear foot (LF) basis as specified in the Bid Schedule, which shall include full compensation for furnishing all labor materials, tools, and equipment, and doing all the work involved in constructing the chain link fence complete in place as shown on the Plans and per the RCFC&WCD Plans and Standard Specifications, and no additional compensation shall be allowed therefor.

PIPE SWING GATE INSTALLATION

Pipe materials, manufacture and quality, and construction methods shall conform to Subsections 206-6, "Chain Link Fence," 210-3, "Galvanizing," and 304-3, "Chain Link Fence," of the Standard Specifications. Gate installation shall conform to Subsection 304-3.3, "Installation of Gates," of the Standard Specifications, RCFC&WCD Standard Plans (Drawing No. M820), and as shown on the Plans. All materials and fittings supplied by the Contractor shall be new.

The Contractor shall place the chain link fence at the location shown on the Plans or as directed by the Engineer.

Payment

Payment for "**Provide and Install Swing Gate Per RCFC&WCD Std. M820**" will be made on a unit price paid per each (EA) basis as specified in the Bid Schedule, which shall include full compensation for furnishing all labor materials, tools, and equipment, and doing all the work involved in constructing the gate complete in place as shown on the Plans and per the RCFC&WCD Plans and Standard Specifications, and no additional compensation shall be allowed therefor.

ROCK SLOPE PROTECTION (RIPRAP)

All rock materials shall meet the quality requirements of Section 72-2.02, "Materials," of the State Standard Specifications.

Rock materials shall be blocky and predominantly angular in shape. No more than 25% of the rock shall have a length more than 2.5 times the breadth or thickness. No rock shall have a length exceeding 3.0 times it breadth of thickness. All over-size rock, as determined by the Engineer, shall be removed.

Rock materials shall be placed on a firm dry foundation in conformance with Method B of Section 72-2.03, "Construction," of the State Standard Specifications, however, additional placement effort shall be required to meet the lines and grades shown as on the Plans and to fill and chink oversize voids with selected rock to establish a stable interlock. Soft, spongy material shall be removed and replaced with acceptable compacted materials as directed by the Engineer.

Rock Slope Protection Fabric placed beneath the rock shall conform to Class 10 per Section 96-1.02I, "Rock Slope Protection Fabric," of the State Standard Specifications.

Payment

Payment for "**Construct 1/2 Ton Rip Rap Per Plan**" will be made on a unit price paid per cubic yard (CY) basis as specified in the Bid Schedule, which shall include full compensation for furnishing all labor, materials, tools, equipment, and incidentals, and for doing all the work

involved in constructing the rock slope protection, complete in place, including excavation and backfilling footing trenches, placement of rocks, rock slope protection fabric, gravel blanket, preparation and placing concrete for grouted rock slope protection, as shown on the Plans, and as specified in the specifications and Detailed Specifications, and no additional compensation shall be allowed therefor.

TRAFFIC CONTROL

Traffic controls, including but not limited to, vehicular and pedestrian traffic controls, maintenance of vehicular and pedestrian access, detours, and street closures shall be in accordance with these Special Provisions; Traffic Control Plans; California Manual on Uniform Traffic Control Devices MUTCD (latest edition at the time of bid) ; the "Work Area Traffic Control Handbook" (WATCH – latest edition at the time of bid); and Part 6, “Temporary Traffic Control”, of the Standard Specifications, including all subsequent amendments (latest edition at the time of bid). Nothing in these Special Provisions shall be construed as relieving the Contractor from his or her responsibility to provide for the safety and convenience of traffic and the public during construction.

In the event of conflict, the order of precedence shall be as follows:

1. Special Provisions
2. Traffic Control Plans
3. California Manual on Uniform Traffic Control Devices
4. Work Area Traffic Control Handbook
5. Standard Specifications

Traffic Control shall be in accordance with the following Special Provisions:

a. All streets shall remain open to through traffic at all times except when street closure is approved by the Engineer. Overnight and long terms street closures can only be approved by City Council, which will require a minimum 4 week lead time. The Contractor shall make provisions to allow local traffic access to the closed streets. The local traffic consists of, but is not limited to, residences, church congregations, farmers, post offices, meter readers, trash pickup, school buses, and emergency vehicles. The Contractor shall provide a smooth travel way and either a flagger and/or signing to direct traffic.

b. The Contractor shall be responsible for the preparation of Traffic Control Plans as necessary for the work. The Traffic Control Plans shall be submitted on 24” X 36” bond paper, signed and stamped by a California Registered Traffic Engineer, and transmitted to the City for approval no later than fourteen (14) calendar days prior to the scheduled commencement of work. Comments and corrections shall be returned to the Contractor within five (5) working days. The Traffic Control Plans shall conform to the requirements listed in these Special Provisions; California MUTCD; the Work Area Traffic Control Handbook; and the Standard Specifications.

c. All traffic controls and safety devices, equipment and materials, including but not limited to cones, channelizers, delineators, flashing warning lights, barricades, high level warning devices (telescoping flag trees), flags, signs, markers, portable barriers, temporary railing (Type-K), temporary fencing, flashing arrow signs, changeable

message sign, markings, and flagging equipment shall be provided and maintained in "like new" condition.

d. Consistent with the City's Encroachment Permit, traffic signal actuation shall be maintained at all times. In-pavement loop detectors damaged by construction shall be repaired within 72 hours, or a suitable temporary replacement system shall be provided. Approved alternatives include microwave or video detection systems (wireless allowed). Installation shall be accomplished by the Contractor, subject to the approval of the Engineer prior to the start of construction. After completion of the roadway construction and final paving in place, the inductive loops shall be restored and operable prior to the removal of the temporary detection system, unless otherwise shown on the Plans or required by these Special Provisions.

e. The Contractor shall furnish and properly install, construct, erect, use and continuously inspect and maintain, twenty-four (24) hours per day, seven (7) days per week, which includes holidays, all said devices, equipment and materials and all temporary and permanent pedestrian and driving surfaces as necessary to provide for the safety and convenience of, and to properly warn, guide, control, regulate, channelize and protect the vehicular traffic, pedestrian traffic, project workers, and the public throughout the entire limits of the work activity and beyond said limits as necessary to include areas affecting or affected by the work, from the date of Notice to Proceed to the completion and acceptance of the work.

f. High-level warning devices (telescoping flag trees) are required to be maintained in an upright position at all times for work being performed within the roadway unless otherwise specifically approved by the Engineer.

g. All barricades shall be equipped with flashing warning lights, and all traffic cones shall be no less than 28 in in height, except that shorter cones, 12 in minimum height, may be permitted during striping maintenance operations where the only function of the cone is to protect the wet paint from the traffic.

   The entire area of orange and white stripes for barricades shall be Type I, engineering grade, or Type II, super engineering grade, retro-reflective sheeting conforming to the requirements of ASTM Designation: D 4956-95.

h. Type III barricades, no less than 6 ft in length and equipped with two (2) Type "N" markers each and two (2) portable flashing beacons each, shall be used to close streets, except as otherwise specifically approved by the Engineer for minor maintenance work of no more than one (1) working day's duration, on weekdays, or on holidays only, and limited to the hours between 8:30 a.m. and 3:30 p.m. Said barricades shall be placed across the full roadway at each point of closure with the distance between barricades, or between barricades and curbs, not exceeding 3 ft except that one (1) 11 ft wide gap between barricades shall be provided at the center of the street. Barricades to the right of the street's center, facing the inbound vehicular traffic, shall also be equipped with one (1) R11-2, "Road Closed" sign, one (1) R11-4, "Road Closed to Thru Traffic," sign, and a Type P warning sign.

i. Channelizers shall be surface mounted type and shall be furnished, placed and maintained at the locations shown on the Plans or as approved by the Engineer, and

shall conform to the provisions in Subsection 12-3.05, “Channelizers,” of the State Standard Specifications and these Special Provisions.

When no longer required for the work as determined by the Engineer, channelizers (except channelizers to be left in place), and underlying adhesive used to cement the channelizer bases to the pavement, shall be removed. Removed channelizers and adhesive shall become the property of the Contractor and shall be removed from the site of work.

j. Reflectorized (both sides) temporary self-adhesive markers, 4 in wide, shall be applied to unstriped pavement surface before opening the travel way to public traffic. Reflectorized temporary yellow markers shall be used for to delineate the centerline to separate opposing traffic. Reflectorized temporary white markers shall be used to delineate lanes of travel and placed in 24 in intervals transverse to the road to delineate stop bars and limit lines.

   The reflectorized temporary markers shall be removed the same day the first coat of striping has been placed on the pavement. The removal of the markers shall be done such a way that the pavement is not damaged.

k. Except as otherwise approved by the Engineer, two-way vehicular traffic shall be maintained at all times within two (2) 11 ft wide lanes on streets having an effective roadway width of 44 ft or more with restricted parking. Other streets of lesser widths may be reduced to one (1) 12 ft wide lane with work activity being limited to one side at a time, and the one-way vehicular traffic being maintained at all times by properly trained and experienced flaggers. All lane closures shall have flashing arrow signs to provide additional, high level, advanced warning.

   No reduction of the traveled way width shall be permitted on any City street before 8:30 a.m. nor after 3:30 p.m., on weekends or holidays, or when active work is not being done, unless otherwise approved by the Engineer.

l. Properly trained and experienced flaggers shall be provided to direct traffic when said traffic is to be interrupted, when two-way traffic is to be reduced to one-way traffic, and at other such times as is necessary to safely pass traffic through or around the work area and when so directed by the Engineer.

m. Vehicular access to occupied residential property may be restricted on weekdays, other than holidays, between the hours of 8:30 a.m. and 3:30 p.m. while essential work activity is taking place only upon approval by the Engineer and providing the Contractor gives the property owner or resident at least forty-eight (48) hour advance written and oral notice.

   Convenient and safe pedestrian access to schools, churches, occupied residential and business property shall be maintained at all times. Access to mailboxes shall be maintained at all times such that the postal delivery service is not interrupted. Trash pick-up services shall not be interrupted. Access to vacant and unused property may be restricted when approved by the Engineer. Both vehicular and pedestrian access shall be maintained at all times to all other property except as otherwise specifically authorized in writing by the Engineer.

n. Vehicular access to business, school, and church driveways shall be maintained at all times during construction.

o. Traffic control and safety devices and equipment being used that becomes damaged, destroyed, faded, graffitied, encrusted, soiled, misplaced, worn out, inoperative, lost, or stolen shall be promptly repaired, refurbished, or replaced. Traffic control and safety devices and equipment that are displaced or not in an upright position from any cause shall be promptly returned or restored to their proper position.

p. An unobstructed view of all signs and warning devices including, but not limited to, stop signs, stop ahead signs, street name signs, and other regulatory, warning and construction signs, markers, and warning devices shall be maintained at all times. All speed limit signs shall be black on white with signs at either end of the project notifying the motoring public that fines are doubled in construction zones. No trucks or other equipment or materials shall be stopped, parked, or otherwise placed so as to obscure said signs, markers and devices from the view of the vehicular and pedestrian traffic to which it applies. All signs used at night shall be either retroreflective with material that has a smooth, sealed outer surface or illuminated to show the same shape and similar color both day and night. The requirement for sign illumination shall not be considered to be satisfied by street, highway, or strobe lighting. Temporary Traffic Control (TTC) zone signs used at night shall maintain retroreflectivity at or above the minimum levels in MUTCD Table 2A-3 as follows.

Table 2A-3. Use of Sign Shapes	
Shape	**Signs**
Octagon	* Stop
Equilateral Triangle (1 point down)	* Yield
Circle	* Highway-Rail Grade Crossing (Advance Warning)
Pennant Shape/ Isosceles Triangle (longer axis horizontal)	* No Passing
Pentagon (pointed up)	* School Advance Warning Sign * County Route Sign
Crossbuck (two rectangles in an "X" configuration) Diamond	* Highway-Rail Grade Crossing Warning Series
Rectangle (including square)	Regulatory Series ** Guide Series Warning Series
Trapezoid	Recreational and Cultural Interest Area Series National Forest Route Sign

* This sign shall be exclusively the shape shown
** Guide series includes general service, specific service, recreation, and emergency management signs

q. When entering or leaving roadways carrying public traffic, the Contractor's equipment, whether empty or loaded, shall yield to said public traffic at all times, except where the

traffic is being controlled by police officers, fire officers, properly trained and experienced flaggers, or at traffic signalized intersections.

r. Stockpiling or storage of materials on any public right of way or parking area will not be allowed without the specific written permission of the Engineer. Materials spilled along or on said right-of-way or parking area shall be removed completely and promptly. All stockpile and storage areas shall be maintained in a safe, neat, clean, and orderly condition, and shall be restored to equal or better than original condition upon completion of the work.

s. On projects involving work on, closure of, or partial closure of existing streets, and where vehicular access to the abutting property must be restricted, the work shall be so selected, arranged and scheduled that the person(s) requiring access to said abutting property and residents along said streets affected will be able to park within a reasonable distance of not more than 500 ft from their homes or destination. In addition, no two adjoining streets shall be closed at the same time, except as otherwise approved by the Engineer. Residents must be given written notice of such restrictions a minimum of 48 hours in advance.

t. When work has been completed on a particular street or has been suspended or rescheduled, and said street is to be opened to vehicular traffic, all equipment, “NO PARKING” signs, other obstructions, and unnecessary traffic control devices and equipment shall be promptly removed from that street, except as otherwise approved by the Engineer.

u. Should the Contractor be neglectful, negligent, or refuse, fail, or otherwise be unavailable to promptly, satisfactorily, and fully comply with the provisions specified and referred to herein above, the City reserves the right to correct or mitigate any situation, that in the sole opinion of the Engineer, constitutes a serious deficiency or serious case of noncompliance, by any means at its disposal at the Contractor’s or permittee’s expense, and shall deduct the cost therefor from the Contractor’s progress or final payments. Such corrective action taken by the City shall not reduce or abrogate the Contractor’s legal obligations and liability for proper traffic control and safety measures and shall not serve to transfer said obligations and liabilities from the Contractor to the City or the City’s agents.

v. Violations of any of the above Provisions or provisions of the referenced publications, unless promptly and completely corrected to the satisfaction of the Engineer, shall, at the sole discretion of the City, be grounds for termination of the Contract, or shut down or partial shut down of the work, without compensation to the Contractor or permittee, or liability to the City, all as prescribed by contractual obligation or State law, whichever is applicable.

Payment

Payment for “**Traffic Control**” will be made on a unit price paid per lump sum (LS) for Traffic Control shall include full compensation for, but not limited to, furnishing all labor (including flagging costs), materials (including construction area signs), tools, equipment, traffic control plans and revisions, and incidentals, and for doing all the work involved in placing, removing, storing, maintaining, moving to new locations, replacing and disposing of the components of the

traffic control including lights, loop detector repair, alternative wireless or video detection systems, channelizers (surface mounted), temporary railing (Type K) markers, delineators, temporary striping and pavement marking, barricades, portable flashing beacons, flashing arrow signs, portable changeable message signs, as shown on the Plans, as specified in the Standard Specifications and these Special Provisions, and as directed by the Engineer.

Full compensation for removing and salvaging the traffic control equipment and materials that are to be reused or reset in the project shall be considered as included in the contract lump sum price paid for traffic control and no additional compensation will be allowed therefor.

Failure of the Contractor to maintain the required lane widths or failure to adhere to the work hours per the Project Specific Scope of Work and Traffic Control of these Special Provisions will result in a permanent payment deduction of $500 for each Incident that the Contractor fails to comply. An Incident is defined as the issuance of a written Correction Action Notice by the Engineer or his representative to the Contractor.

There will be a limit of one (1) incident per four (4) hour time period and two (2) incidents per working day. The payment deduction is in addition to the City's right to suspend work per these Special Provisions.

Partial payment for traffic control shall be based on the percentage of total value of work completed on the other items listed under each schedule as of each progress pay estimate.

TRAFFIC SIGNAL IMPROVEMENTS

Furnishing and installing traffic signal equipment, highway lighting systems, interconnect conduit, and payment therefor shall conform to Section 86, "Electrical Work", of the State Standard Specifications, State Standard Plans, where applicable, and these Special Provisions, unless stated otherwise.

Pursuant to Public Contract Code Section 3400(b) the City of Moreno Valley may make a finding that designates certain materials, products, things, or services by specific brand or trade name for statutorily enumerated purposes. As required by Section 3400(b) the City of Moreno Valley has made such findings as further described in these Special Provisions.

Equipment List and Drawings:

No submittal is required under Subsection 86-1.01C, "Submittals," of the State Standard Specifications for City-furnished equipment.

Certificate of Compliance:

A Certificate of Compliance shall be submitted by the manufacturer for the following:

1. Bar Reinforcement
2. Anchor Bolts, Anchor Bars or Studs
3. Each type of Conductor or Signal Cable
4. Poles and Arms
5. Electrical Service Cabinet and Equipment
6. Traffic Signal Cabinet and Equipment
7. Electrolier

The certificate shall be signed by the manufacturer of the material or the manufacturer of assembled materials and shall state that the materials involve comply in all respects with the requirements of the specifications. A Certificate of Compliance shall be furnished with each lot of material delivered to the work and the lot so certified shall be clearly identified in the certificate.

All materials used on the basis of a Certificate of Compliance may be sampled and tested at any time. The fact that material is used on the basis of a Certificate of Compliance shall not relieve the Contractor of responsibility for incorporating material in the work which conforms to the requirements of the plans and specifications and any material not conforming to the requirements will be subject to rejection whether in place or not.

The City reserves the right to refuse to permit the use of material on the basis of a Certificate of Compliance.

A Certificate of Compliance will not be required if the City furnishes the material.

Scheduling of Work:

Revise Subsection 86-1.01C, "Scheduling of Work," of the State Standard Specifications to include the following:

Pothole all standard (pole) foundation locations and temporary pole locations within five working days after the date of the “Notice to Pothole Pole Foundation Locations.” Notify the Engineer of the results in writing. The “Notice to Proceed with Order of Material” will not be issued until all foundation locations are potholed and suitability determined.

Place the order for material within five working days of the date of the “Notice to Proceed with Order of Material,” and provide the City with proof of the order and manufacturer's tentative delivery schedule (on the manufacturer’s letterhead) within five working days of the order.

Submit a revised construction schedule thirty calendar days prior to the scheduled delivery of material. The City will issue the “Notice to Proceed with Construction” after receiving the 30-day notification and approving the construction schedule.

Maintain all job sites in neat and orderly condition at all times, with allowance for pedestrian access compliant with Americans with Disabilities Act and California Title 24 requirements.

Excavating and Backfilling:

The first paragraph of Subsection 87-1.03E, "Excavating and Backfilling," of the State Standard Specifications is deemed revised to read as follows:

Dispose of surplus excavated material on the same day removal occurs. Do not stockpile in the City right-of-way.

Omit the fourth paragraph of Subsection 87-1.03E of the State Standard Specifications.

Removing and Replacing Improvements:

Add to Subsection 87-1.03, "Removing and Replacing Improvements," of the State Standard Specifications, the following:

Replace all curb and gutter, cross gutters, and spandrels within four working days of removal. Place AC patches within two working days after the curb and gutter, cross gutters, and spandrels are replaced.

Replace all sidewalk within fifteen working days of removal associated with traffic signal work only.

Foundations:

Subsection 87-1.03E(3), "General," of the State Standard Specifications shall be deemed revised to include the following, which supersedes conflicting language in the State Standard Specifications:

> Portland Cement Concrete (PCC) shall be 330-C-23 (560-C-3250) in Subsection 201-1.1.2 "Concrete Specified by Class and Alternate Class," of the Standard Specifications.
>
> Place concrete continuously for each cast-in-place pile and foundation. Do not commence work on any integral part unless sufficient material for the concrete is on hand, and your forces and equipment are sufficient to complete the part without interruption in the placing of the concrete. Joints in the concrete due to stopping work are not allowed. If insufficient concrete is on hand and a cold joint will occur or does occur, the cast-in-place pile or foundation shall be removed. Concrete for a new cast-in-place pile or foundation shall then be placed at your expense.
>
> Place and consolidate concrete by methods that will not cause segregation of the aggregates and will result in a dense homogeneous concrete which is free of voids and rock pockets. All concrete shall be placed while fresh and before it has taken an initial set. Retempering any partially hardened concrete with additional water will not be permitted.
>
> Thoroughly moisten forms and subgrade with water immediately before placing concrete.
>
> Place concrete as nearly as possible in its final position; the use of vibrators for extensive shifting of the mass of fresh concrete will not be permitted. Do not permit concrete to fall from a height greater than eight feet without the use of adjustable length pipes, tubes or double belting placed to prevent segregation of the concrete, unless the flow of concrete is directed into the center of the hole using a hopper. Place concrete in cast-in-place piles or foundations such that the concrete does not strike the reinforcement, reinforced bracing, conduit, and other objects in the hole; and by means which do not cause segregation. Double belting shall not be used unless the thickness of the member is less than 16 inches.
>
> Consolidate all concrete by means of high-frequency internal vibrators within 15 minutes after it is deposited in the forms. Concrete filling for cast-in-place concrete piles shall be vibrated in the upper 16.5 feet of the pile. Do not attach the vibrators to, or hold the vibrators against, the forms or the reinforcing steel. The vibrating shall be done with

care and in such manner that displacement of reinforcement, conduit and anchor bolts is avoided.

Vibrators used to consolidate concrete containing epoxy-coated bar reinforcement shall have a resilient covering to prevent damage to the reinforcement.

When concrete is inaccessible for adequate consolidation by other means, external vibrators shall be used and the forms shall be sufficiently rigid to resist displacement or damage.

Only concrete that is designated as seal course concrete may be placed under water.

All newly placed concrete of the temporarily exposed surfaces of the cast-in-place concrete piles, foundations, and other structures shall be properly cured.

Check all anchor bolts circle pattern immediately after placement of concrete. You will not be allowed to adjust any bolts after the concrete is set. If the anchor bolts are installed incorrectly, the foundation shall be removed and replaced at no additional expense to the City.

Construct cast-in-place concrete piles and foundations so that the excavation methods and the concrete placement procedures provide for placing the concrete against undisturbed material in a dry or dewatered hole.

Examine all holes for straightness. The axis of the hole shall not deviate from plumb more than 0.45 feet per 10 feet of length.

During excavation, do not disturb the foundation material surrounding the pile. Equipment or methods used for excavating holes shall not cause quick soil conditions or cause scouring or caving of the hole. After excavation is begun, construct the pile expeditiously in order to prevent deterioration of the surrounding foundation material from air slaking or from the presence of water. Deteriorated foundation material, including material that has softened, swollen or degraded, shall be removed from the sides and the bottom of the hole and shall be disposed of. Clean the bottom of the drilled holes just before placing reinforcement or concrete to remove any loose sand, gravel, dirt, and drill cuttings.

After placing reinforcement and prior to placing concrete in the drilled hole, if caving occurs or deteriorated foundation material accumulates on the bottom of the hole, as determined by the Engineer, the reinforcement shall be removed and the bottom of the drilled hole cleaned.

Remove any water that has infiltrated the hole before placing concrete therein. Do not permit flow or drainage water to enter the hole.

Furnish and place temporary steel casings tight in the hole where shown on the Plans and where necessary to control water or to prevent quick soil conditions or caving of the hole. Temporary casings shall be watertight and of sufficient strength to withstand the loads from installation, removal, lateral concrete pressures and earth pressures. The casing shall be non-corrugated and the surfaces shall be smooth, clean and free from hardened concrete. Remove the casing while the concrete is being placed. In a dewatered hole, maintain the concrete in the casing at a level at least five feet above the bottom of the casing or at a level above the bottom of the casing adequate to prevent displacement of the concrete by material from outside the

casing, whichever is greater. Avoid separation of the concrete during casing withdrawal operations by hammering on or otherwise vibrating the casing. The withdrawal of casings shall not leave voids or cause contamination of the concrete with soil or other materials.

Portions of the holes may be enlarged, backfilled with slurry cement backfill, concrete, or other material, and redrilled to the specified diameter to control caving. Use backfill material at enlarged piles that is chemically compatible with concrete and steel, drillable, and has the necessary strength required for the conditions.

Place the reinforcement and secure it symmetrically about the axis of the pile, and securely block it to clear the sides of the hole.

Reinforcement for cast-in-place concrete piling with increased diameters and revised tip elevations shall conform to the following:

> The size and number of the reinforcing bars, the percentage of bars required to extend to the pile tip, and the size and pitch of the spiral reinforcement shall conform to the details shown on the Plans for the original piles.
>
> The required length of the spiral reinforcement and of any reinforcing bars which do not extend to the pile tip shall be that length which would have been required for the original specified or ordered tip elevation.
>
> The diameter of the spiral reinforcement shall either remain the same as required for the original pile or be increased to provide not less than the concrete cover required for the original pile. Positive means shall be provided to ensure that the reinforcement is centered in the pile.
>
> Do not commence drilling holes if reinforcement for the cast-in-place concrete piling is not on the job site.
>
> Do not drill more holes in the same day than can be filled with concrete. If a hole is not filled in the same day it is drilled, you must prevent any entry into the exposed hole, through the use of covering, barricading, fencing, etc. Do not drill additional holes until the previous day’s holes are filled, unless permission is given by the Engineer.

<u>Steel Standards, Poles, Pedestals, and Posts:</u>

Subsection 86 1.02J, "Standards. Poles, Pedestals, and Posts," of the State Standard Specifications shall be deemed revised to include the following:

> The galvanizing or zinc coating shall adhere tenaciously to the surface of the base material. The finished product shall be free from blisters and excess zinc, and the coating shall be even, smooth, and uniform throughout. Machine work, die work, cutting, punching, bending, welding, drilling, thread cutting, straightening, and other fabricating shall be done as far as is practicable before the galvanizing. All members, nuts, bolts, washers, etc., shall be galvanized before a structural unit is assembled. All uncoated spots or damaged coatings shall be cause for rejection.
>
> Products that are warped or distorted to the extent of impairment for the use intended will be rejected.

Test coupons for determining the quantity and quality of the galvanizing shall be of such size and shall be wired to the materials to be galvanized before immersion so as to represent the amount of coating deposited on the finished product.

Install sign mounting hardware, as shown on State Standard Plans ES 7N (Detail U) and RS, at locations shown on the Plans.

Where the Plans refer to the side tenon detail at the end of the signal mast arm, the applicable tip tenon may be substituted.

All new standards shall have a 110-volt, 20-amp single weatherproof electrical outlet installed on the standard just above the signal mast arm. Install twelve-gauge wire directly from the outlets into the service cabinet with 30-amp in-line fuse as per Subsection 86-1.02N "Fused Splice Connectors," of the State Standard Specifications. Install a 30-amp breaker and 20 amp receptacles in the service pedestal, if not already so equipped. Label the breaker “Holiday Lighting.”

All new poles shall be manufactured with a dedicated mast arm and simplex for IISNS as shown on City Standard Plan MVLT-411B-0.

Do not install standards (poles) onto foundations until five working days before scheduled turn-on.

Conduit:

Subsection 86-1.02, "Materials," of the State Standard Specifications shall be deemed revised to include the following:

Use only Type 3 (PVC) Schedule 80 conduit, unless otherwise stated or shown on the Plans.

Conduit not specified shall be 2-in, Type 3 Schedule 80.

Install an earth ground wire in each and every new Type 3 conduit and in any Type 3 conduit containing new or modified wiring.

Subsection 87-1.03B, "Conduit Installation," of the State Standard Specifications shall be deemed revised to include the following:

Place all conduit shall by jacking or drilling methods unless otherwise noted on the Plans. The rigid metal conduit to be used as a jacking or drilling rod shall be fitted with suitable drill bits for the required hole size. In the event jacking or drilling is not possible, and with the approval of the Engineer, the trenching in pavement method may be used. Wherever pavement or sidewalk is removed, you may trench and lay the conduit. Trenches will not be allowed to remain open overnight or on the weekends.

When the "Trenching in Pavement Method" is used for street crossings, the conduit is to be placed at a minimum depth of 36 inches. Backfill all excavations and trenches created in the street for the purpose of installing electrical equipment with trench backfill slurry 100-E-100 (60-E-.7) of the Standard Specifications, remaining 0.30 ft below the

pavement surface. Temporary trench resurfacing shall be placed the same day using D2-SC800 AC. The temporary trench resurfacing must be replaced with permanent AC patch Type 111-D-AR4000 within five working days.

Insulated bonding bushings will be required on metal conduits. When a standard coupling cannot be used for coupling metal type conduit, use a UL or ETL listed threaded “Ericsson” type union coupling.

Pull Boxes:

Subsection 86-1.02C, "Pull Boxes," of the State Standard Specifications shall be deemed revised to include the following:

Pull boxes, pull box covers, and pull box extensions shall be concrete. Traffic-rated pull boxes and covers shall be installed where specified on the Plans.

Place at least 12 inches of gravel or crushed rock in the bottom of all pull boxes.

Provide at least eight inches of clearance between the top of each conduit and the bottom of the pull box cover.

All pull boxes shall be # 6 unless shown otherwise.

Conductors:

Subsection 86-1.02E, "Multiple Circuit Conductors," of the State Standard Specifications shall be deemed revised to include the following:

Insulation shall be type THW Polyvinyl Chloride for traffic signal lights.

Wiring:

Subparagraph 4 of the first paragraph of Subsection 87-1.03H, "General" of the State Standard Specifications, shall be deemed to be replaced with the following:

Splice all conductors No. 10 AWG or larger with "C" shaped compression connectors as shown in the State Standard Plans ES-13A, "Splice Insulation Method Details."

The second sentence of Subsection 87-1.03H, "Splice Insulation Methods," of the State Standard Specifications shall be deemed to read as follows:

Use "Method B" to insulate splices.

Bonding and Grounding:

Subsection 86-1.02F, "Bonding Jumpers and Equipment Grounding Conductors," of the State Standard Specifications shall be deemed revised to include the following additional requirements:

Do not use bronze bolts.

Install an eight-foot ground rod in all Controller and Service foundations.

Type III CF Service:

Subsection 87-1.03L(2)(a), "General," of Section 87-1.03L, “Electrical Service,” of the State Standard Specifications shall be deemed revised to include the following:

The City will purchase and test the Type III-CF Model No. MEUG 35D-PB-M100/M100, with Ethernet interface, service equipment. At least five days in advance of need, make arrangements to obtain the Type III-CF service equipment from:

Moreno Valley City Yard
15670 Perris Boulevard
Moreno Valley, CA 92551
951.413.3162

Before receiving the service equipment, verify that the equipment has been tested and is in working order. You will be responsible for any damage and repair to the service equipment once it is in your possession until the work is accepted by the City.

Permanently install the service pedestal address on the pedestal in the manner required by Southern California Edison Corp.

Payment for pickup, transporting, installing, repair and field testing of the Type III-CF service equipment is included in the lump sum price for traffic signal improvements, or separate bid item if so designated, and no additional compensation will be allowed therefor.

The City will supply a Type III-CF dual side-by-side meter service equipment enclosure with a (5) five clip meter socket and test blocks for each meter. The service equipment enclosure color will be white – inside and out. The service equipment enclosure will be in accordance with State Standard Plan ES-2F, “Signal, Lighting, and Electrical Systems Service Equipment and Typical Wiring Diagram, Type C,” and will include Type III lighting controls with one power transfer switch, one Powerback 2000 UPS, four 79 amp maintenance free batteries, and MP2000TB Ethernet interface.

Testing

Subsection 86-1.01D, "Department Acceptance," of the State Standard Specifications shall be deemed to include the following:

A knowledgeable representative for the manufacturer or distributor of the traffic signal control equipment shall be present for the turn on, and for a reasonable period of time thereafter, as determined by the Engineer.

Controller Assembly

Subsection 86-1.02Q, "Department-Furnished Controller Cabinets," of the State Standard Specifications shall be revised to include the following:

The City will provide a Type 333L controller cabinet complete with 2070LX controller and intersection control firmware, load switches, pedestrian and vehicular detector cards, conflict monitor unit, flash transfer relay, flasher, power distribution assembly, test panel, and police panel.

Make arrangements to obtain the controller cabinet at least five business days in advance of need, from:

Moreno Valley City Yard
15670 Perris Boulevard
Moreno Valley, CA 92551
951.413.3162

Before receiving the controller cabinet, verify that the equipment has been tested and is in working order. You will be responsible for any damage and repair to the service equipment once it is in your possession until the work is accepted by the City.

As called for on the Plans, install a Type “P” Foundation as per State Standard Plan ES-3C and City Standard Plan MVLT-460-0, install the 333L cabinet onto the Type “P” foundation, and provide all tools, equipment, and materials necessary to render the traffic signal system fully operational as shown on the Plans.

The City-supplied cabinet will conform to the following:

The 333L cabinet meets or exceeds all requirements of the ITS Cabinet Standard v01.02.17b published by AASHTO, ITE, and NEMA; the Caltrans Transportation Electrical Equipment Specifications, 2009 version, for the 332L cabinet.

The cabinet is designed to be installed on a standard “P” cabinet foundation, is equipped with four doors, and provides two 19-inch racks. The traffic control equipment will be installed only into the rack on the left, when viewed from the front of the cabinet; leaving the other rack completely empty and clear. The cabinet is 66 inches in height and will be keyed to use standard No. 2 locks and keys.

The cabinet will be supplied with an anti-graffiti coating.

A test panel will be installed and configured to be capable of both momentarily and continuously activating every vehicular and pedestrian phase.

The cabinet will be supplied with the following equipment:

- Corbin locks (#2 key)
- 2070LX controller with firmware and Ethernet capability
- Model 210 ECL conflict monitor
- Model 242 DC isolator, quantity six
- Model 430 flash transfer relay, quantity four
- Model 200 load switch, quantity 12
- Model 222 detector card, quantity 16

- Detector actuation panel, 16 switches: 12 on/off/momentary for vehicular and pedestrian phases, and 4 off/momentary for EVA through EVD
- Manual advance circuit
- Anchor bolts

Vehicle Signal Faces and Signal Heads:

Subsection 86-1.02R(4), "Signal Faces," of Section 86-1.02R, “Signal Heads,” of the State Standard Specifications shall be deemed to include the following:

Order all optical units as follows:

Circular red: Dialight 433-1210-003XL15 or approved equal
Circular yellow: Dialight 433-3230-901XL15 or approved equal
Circular green: Dialight 433-2220-001XL15 or approved equal
Red arrow: Dialight 432-1314-001XOD15 or approved equal
Yellow arrow: Dialight 431-3334-901XOD15 or approved equal
Green arrow: Dialight 432-2374-001XOD15 or approved equal

Plastic signal sections, visors, and backplates are not allowed.

The second sentence of the fourth paragraph of Subsection 86-1.02R(3), "Backplates," of the State Standard Specifications shall be amended to read as follows:

Sections shall be joined using 10-24 machine screws with washer, lock washer and nut, painted to match the backplate. Backplates shall be metal without louvers.

Quality Control and Assurance (LED)

Subsection 87-1.01D, “Quality Assurance,” of the State Standard Specifications is revised to read as follows:

Submit manufacturer’s test data to the Public Works Traffic Signal Maintenance Division and to the Engineer.

Pedestrian Signal Faces:

Subsection 86-1.02S(3), “Pedestrian Signal Faces,” of the State Standard Specifications is revised to read as follows:

Pedestrian signal faces shall be countdown type, Dialight 430 6479 001X, or approved equal.

Subsection 86-1.02S(3)(d), "Front Screen", of the State Standard Specifications is revised to read as follows:

The following type of front screen shall be provided on each pedestrian signal:

A 1 ½ inch deep Z crate type screen of 0.03 inch nominal thickness polycarbonate. The screening shall be mounted in a frame constructed of 0.04 inch minimum thickness

aluminum alloy or polycarbonate. The screen shall be installed parallel to the face of the message plate and shall be held in place by the use of stainless steel screws.

The screen and frame shall be fabricated from aluminum anodized flat black, or finished with flat black enamel as specified in Section 91 4.01, "Enamel, Traffic Signal, Lusterless, Black" of the State Standard Specifications. Plastic housings will not be permitted.

Subsection 86-1.01D, “Quality Assurance,” of the State Standard Specifications is revised to read as follows:

Manufacturer’s test data shall be submitted to Public Works Traffic Signal Maintenance Division and the Engineer.

Signal Mounting Assemblies:

Subsection 86-1.02R(2), “Signal Mounting Assemblies,” of the State Standard Specifications is hereby revised to require cast bronze terminal compartments.

Detectors:

Subsection 86-1.02F(2)(c)(iii), "Inductive Loop Detectors", of the State Standard Specifications, is hereby revised to include the following additional requirements:

Use only Type 2 loop wire and Type “B” lead-in cable.

The second paragraph of Subsection 86-1.03F(2)(c)(ii) "Detector Lead-in Cables" of the State Standard Specifications shall be deemed revised as follows:

Type “E” inductive loop detector shall consist of four turns of loop wire of the type indicated above. Type “D” inductive loop detector shall consist of five turns of loop wire of the type indicated above.

Subsection 86-1.03F(2)(c)(ii), “Detector Lead-in Cables,” of the State Standard Specifications shall be deemed to include the following additional requirements:

Construct Type “D” loops by sawcutting two slots 21 inches apart, centered on a type “E” (round) loop, oriented at a 45 degree angle to the direction of travel.

Backfill the loop sawcut using only "hot melt rubberized asphalt sealant." Provide at least one inch of coverage over conductors.

Test each Type D detector with a bicycle wheel made of ferromagnetic material, weighing not more than three pounds exclusive of tire and innertube. If a frame is used to hold the wheel upright, it shall be made of a non-ferromagnetic material such as wood. Special features, components or vehicles designed to activate the detector will not be permitted. Place or hold the wheel vertically directly over each Type D detector and demonstrate that the detection circuit registers and holds the presence of the bicycle wheel for a continuous period of time of at least two minutes.

Test each Type E detector with a motor driven cycle, as defined in the California Vehicle Code, that is licensed for street use by the Department of Motor Vehicles of the State of California. The unladen weight of the vehicle shall not exceed 220 pounds and the engine displacement shall not exceed 100 cubic centimeters. Special features, components or vehicles designed to activate the detector will not be permitted. Using an operator licensed to drive such a vehicle, drive the motor driven cycle through the response or detection area of the detector at not less than 3 mph nor more than 7 mph. Demonstrate that the detection circuit consistently registers the presence of the motor driven vehicle.

Supply detector cards with the ability to program delay and extension via controls on the front panel of the card.

Emergency Vehicle Detector System

In accordance with Public Contract Code Section 3400, the City hereby declares that the Opticom brand product shall be used exclusively on all traffic signal projects and substitutions will not be allowed. This determination is made based upon the following findings:

1. The City of Moreno Valley has deployed citywide, Opticom systems on all existing signalized intersections.
2. Use of Opticom will reduce the necessity of stocking multiple, incompatible parts and supplies thereby decreasing maintenance costs.
3. Use of Opticom exclusively will ensure one fully compatible city-wide emergency vehicle pre-emption system and will provide compatibility to existing Opticom systems in place within adjacent jurisdictions, namely the City of Riverside and Caltrans.
4. Opticom has been demonstrated to be reliable and meets all of the expectations / needs of the emergency service providers.

Supply the Opticom system, including receivers of the type shown on the Plans, mounting equipment, cable, discriminator units, controller/cabinet interface equipment, and any other equipment, tools and/or materials necessary to provide a complete, fully functioning emergency vehicle pre-emption system.

Mount each optical detector as specified on the Plans, at the locations shown thereon.

The Emergency Vehicle Preemption (EVP) system's sequence of operation shall be approved by the Engineer prior to timing and turn-on of signals.

Arrange for a factory-authorized representative of the EVP system to be present for the first day of the traffic signal lighting function test.

Testing

Demonstrate to the satisfaction of the Engineer that the installed system consistently registers coded pre-emption requests at a distance of 1000 feet, or the near crosswalk of the adjacent signalized intersection, whichever is less, in each direction for which detectors are installed.

Pedestrian Push Buttons:

Subsection 86-1.02U, "Push Button Assemblies", of the State Standard Specifications shall be deemed revised to include the following:

Supply only Type B, ADA-compliant pedestrian push buttons.

Bicycle push buttons shall be Type B with bicycle plate.

Pedestrian and bicycle push buttons signs shall conform to the details shown on the Plans except that the message and symbol shall conform to FHWA Standard Highway Signs, latest edition, R10-3e. The specifications are available at no charge from the Federal Highway Association MUTCD Web site at http://mutcd.fhwa.dot.gov/ or by contacting the City's Transportation Division at (951) 413-3140.

Luminaires:

Furnish and install G.E. ERS2-0-19-B1-X-40-A-GRAY (LED, 18600 initial lumens, Type III Medium distribution) or approved equal.

Internally Illuminated Street Name Signs:

Subsection 87-1.02C, "Internally Illuminated Street Name Signs", of the State Standard Specifications shall be deemed modified to include the following:

New internally illuminated street name signs shall be Type "A", (State Standard Plan ES-7P) and the City of Moreno Valley Standard Plan Nos. MVLT-411A-0 to MVLT-411D-0 to accommodate an 18-inch-high sign panel.

Sign panels shall be 18 inches in height, blue background color with FHWA Series "C" white (silver) legends, letters and block numbers. The street name shall have eight-inch letters for upper case and six-inch for lower case. The block numbers shall be four inches high, the street name suffix shall be four-inch upper case and three-inch lower case. The legends, block numbers, and lettering are specified in the City of Moreno Valley Standard Plan Nos. MVLT-411A-0 to MVLT-411D-0.

Install a ½ -inch close nipple and LB conduit on the pole at the coupling point. Supply a three-conductor AWG No. 16, Type SJO cable between sign and conduit. Use the green conductor for grounding between sign housing and conduit. Install the cable into the sign housing and the conduit through neoprene bushed CGB connectors. Dress the cable in a neatly arced drip loop between sign and conduit with sufficient slack to facilitate sign swing.

Mount all IISNS to a dedicated mast arm mounted above the traffic signal mast arm. Supply all new poles, with a factory-installed simplex for this purpose as shown on City Standard Plan MVLT-411D-0. On existing poles where called out on the Plans, retrofit the sign to the pole shaft in the manner specified therein.

The light source shall be Light Emitting Diode (LED) technology, Illumecon Lighting or approved equivalent, satisfying the following requirements:

The power supply shall include a Class 2 LED driver with a power factor of at least 99 percent and total harmonic distortion of less than 10 percent, mounted externally from

the LED lamps, capable of being mounted to an existing ballast tray. The driver shall be configured for high-frequency operation.

The LED lamps shall be mounted to an aluminum frame. Lamps shall mount in adapters manufactured to accommodate Slim Line, HO, and Bi Pin existing sockets as required. The LED light system shall be capable of providing at least as much light output as an equivalent fluorescent tube over the lifetime of the units.

The lamps and drivers shall be UL certified and provided with a five-year warranty against manufacturing defects.

Removing, Reinstalling or Salvaging Electrical Equipment:

Salvageable materials shall become the property of the Contractor unless otherwise noted.

Traffic Signal Turn on

Turn-on of the new traffic signal system shall not be on, nor shall the functional test start on a Thursday, Friday, Saturday, Sunday, Holiday, or any day preceding a holiday. Notify the Engineer at least five working days prior to the intended turn-on.

At least one week prior to turn-on, notify the City of Moreno Valley Transportation Engineering Division in writing to conduct an inspection and prepare a punch list of the items that need to be corrected. Said Division will notify you in writing of items requiring correction. Correct all items and notify the Engineer in writing of their completion.

Upon completion of the punch list items, The Engineer will notify the Contractor in writing to schedule the traffic signal turn on. The Contractor shall coordinate with the City to ensure the controller manufacturer's representative is on-site when the traffic signal is turned on.

The striping and sign installation related to the signalization shall be completed before traffic signal turn on, but not more than 24 hours beforehand.

General Cleaning:

The intersection must be cleaned and swept completely prior to traffic signal turn on. Clean up includes but is not limited to:

Signal poles, signal mast arms, signal heads, signal head visors, signal head lenses, traffic safety lights, controller cabinet, service cabinet, signs, sidewalks, curbs, gutters, intersection within 500 feet in all directions, etc.

Payment

Payment for "**Traffic Signal (Temporary)**" will be made on a unit price paid per lump sum (LS) for Traffic Signal (Temporary) and shall include full compensation for, but not limited to, furnishing all labor, materials, tools, equipment and incidentals, and for doing all the work involved in potholing, placing, removing, storing, maintaining, moving to new locations, replacing and disposing of the components of the traffic signal including, but not limited to traffic signal poles, mast arms, luminaire mast arms, pole and mast arm mounted signs, luminaires, vehicular signal heads and pedestrian heads, street name signs, pedestrian push buttons, pull boxes,

conduit, wiring, loop detectors, controllers and cabinets, electrical service meters and cabinets, foundations, wood poles, temporary wiring, and all necessary appurtenances as shown on the Plans, as specified in the Standard Specifications and these Special Provisions, and as directed by the Engineer and shall be considered as being included in lump sum cost for Traffic Signal (Temporary) and no separate or additional payment will be allowed therefor.

Payment for "**Traffic Signal (Modification)**" will be made on a unit price paid per lump sum (LS) for Traffic Signal (Modification) and shall include full compensation for, but not limited to, furnishing all labor, materials, tools, equipment and incidentals, and for doing all the work involved in potholing, placing, removing, storing, maintaining, moving to new locations, replacing and disposing of the components of the traffic signal including, but not limited to traffic signal poles, mast arms, luminaire mast arms, pole and mast arm mounted signs, luminaires, vehicular signal heads and pedestrian heads, street name signs, pedestrian push buttons, pull boxes, conduit, loop detectors, controllers and cabinets, electrical service meters and cabinets, foundations, wiring, and all necessary appurtenances as shown on the Plans, as specified in the Standard Specifications and these Special Provisions, and as directed by the Engineer and shall be considered as being included in lump sum cost for Traffic Signal (Modification) and no separate or additional payment will be allowed therefor.

Payment for "**Replace Existing Pull Box Cover**" will be made on a unit price paid per each (EA) for Replace Existing Pull Box Cover and shall include full compensation for, but not limited to, furnishing all labor, materials, tools, equipment and incidentals, and for doing all the work involved in placing, removing, storing, maintaining, replacing and disposing of the components of replace existing pull box cover and all necessary appurtenances as specified in the Bid Schedule, Standard Specifications and these Special Provisions, and as directed by the Engineer and shall be considered as being included in lump sum cost for Replace Existing Pull Box Cover and no separate or additional payment will be allowed therefor.

Payment for "**Replace Existing Detector Loop**" will be made on a unit price paid per each (EA) for Replace Existing Loop Detector and shall include full compensation for, but not limited to, furnishing all labor, materials, tools, sealant, equipment and incidentals, and for doing all the work involved in replace existing loop detector and all necessary appurtenances as specified in the Bid Schedule, Standard Specifications and, these Special Provisions, and as directed by the Engineer and shall be considered as being included in lump sum cost for Replace Existing Loop Detector and no separate or additional payment will be allowed therefor.

APPENDIX I

EMWD SPECIFICATIONS

Riverside County
Perris, California

STORM DRAIN LINE K-1 WATER RELOCATIONS PROJECT (City of Moreno Valley)

Work Order # 13-368

A PUBLIC WORKS PROJECT

October 2015

Contents:
Specifications | Conditions of Contract

Paul D. Jones, II, P.E. - General Manager

Safety is of paramount and overriding importance to Eastern Municipal Water District

[PAGE LEFT INTENTIONALLY BLANK]

TABLE OF CONTENTS

BIDDING REQUIREMENTS		PAGE
00026	Bidder's References	BR-1 thru -4
00054	Pipe Zone Density Chart (CML&C)	C18-1 thru -2

GENERAL CONDITIONS		PAGE

EMWD General Conditions are hereby attached by reference: See following website: http://www.emwd.org/construction/capital-improvement-project-standards/emwd-boilerplate-documents-for-engineering-provisions to download

00062	Section E, Inspection & Tests	E-1 thru E-2
00064	Section F, Labor & Construction	F-1 thru F-58
	Includes Exhibit A – Escrow Agreement	

SPECIAL CONDITIONS		PAGE
00100	Special Conditions	SC-1 thru SC-14

CONTRACT DRAWINGS		
00200	Section P Standard & Construction Drawings (list)	P-1 thru P-2

EMWD DETAILED PROVISIONS

EMWD General Conditions are hereby attached by reference: See following website:http://www.emwd.org/construction/capital-improvement-project-standards/emwd-standard-detailed-provisions to download.

01000	General Safety Requirements	1 thru 8
01380	Pre-Const. Audio Video Taping: Pipelines & Roadways	1 thru 4
02201	Construction Methods and Earthwork	1 thru 28
02221	Trenching, Backfilling, and Compacting	1 thru 10
02252	Control Density Fill	1 thru 4
02718	Installation of Water Pipeline	1 thru 20
02725	Installation of Copper Pipe and Tubing	1 thru 2
09810	Tape Wrap for Insulated Joints	1 thru 2
09900	Painting and Protective Coatings	1 thru 28
15059	Welded Steel Fittings	1 thru 2
15061	Steel Cylinder Water Pipe	1 thru 14
15136	Air Valves	1 thru 2

APPENDICES

EMWD Appendix "A", Approved Materials List is hereby attached by reference: See following website:
http://www.emwd.org/home/showdocument?id=756 to download.

Appendix A	Approved Materials List	1 thru 12

EXHIBITS

Vicinity Map

EASTERN MUNICIPAL WATER DISTRICT
STORM DRAIN LINE K-1 WATER RELOCATIONS PROJECT

BIDDER'S 3-YEAR EXPERIENCE RECORD & RESUMES OF KEY PERSONNEL

All bidders must provide a ***detailed 3-year*** experience record showing successful completion, as a Contractor (Class A and/or C-34 license), of at least Three (3) similar projects within the last Three (3) years on the attached form when submitting your bid.

Additionally, bidders must include resumes of key personnel proposed to work on this project when submitting your bid. This information will be critical in determining the most responsible bidder.

PAGE LEFT INTENTIONALLY BLANK

DETAILED 3-YEAR EXPERIENCE RECORD

PLEASE USE ADDITIONAL SHEETS

OWNER / (CONTACT PERSON Address & phone #					
ENGINEER / CONTACT PERSON Address & phone #					
LOCATION OF WORK (CITY)					
VALUE OF WORK PERFORMED					
TYPE/DESCRIPTION OF WORK					
YEAR					

BIDDER'S RESUMES

(ATTACH HERE)

MANUFACTURER'S PIPE ZONE DENSITY CHART

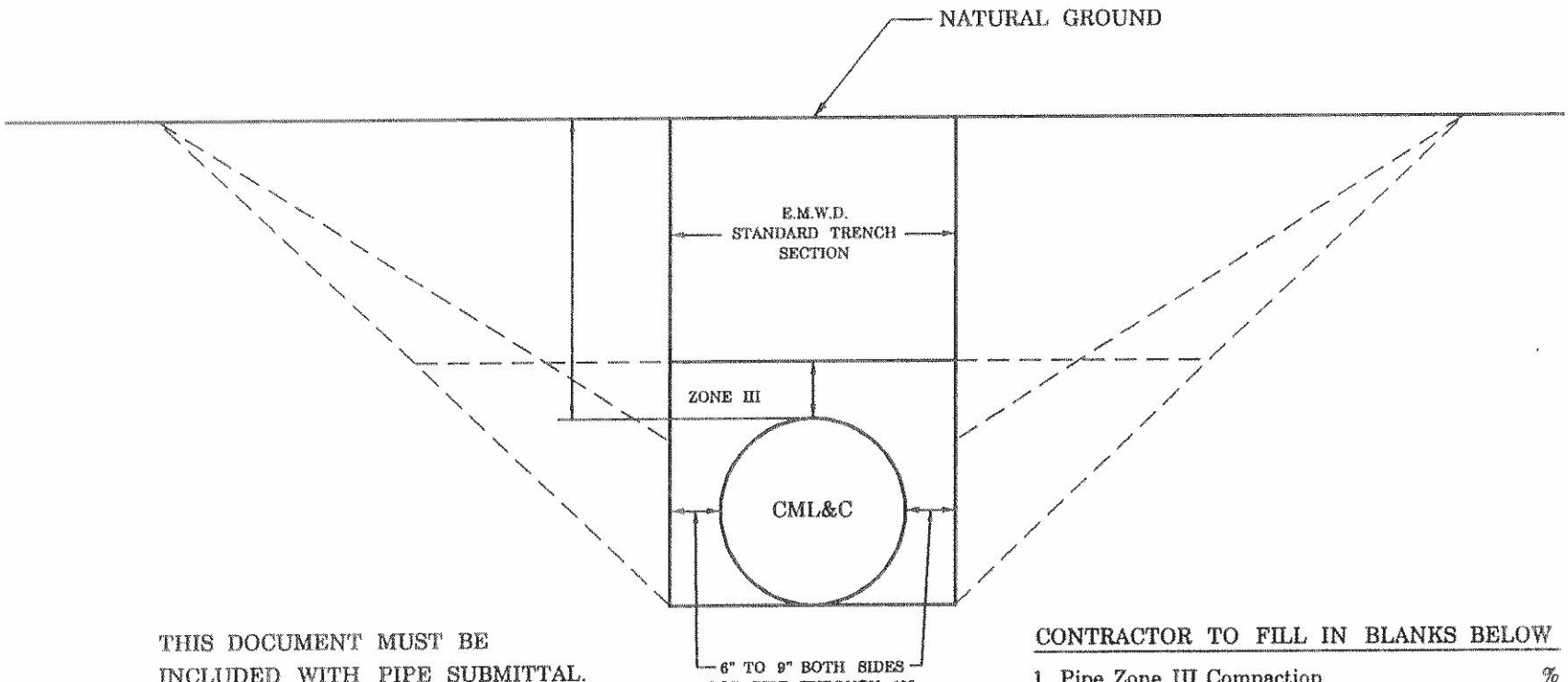

THIS DOCUMENT MUST BE INCLUDED WITH PIPE SUBMITTAL. NO ALTERATIONS OR CONDITIONS ARE ALLOWED.

CONTRACTOR TO FILL IN BLANKS BELOW

1. Pipe Zone III Compaction _____ %
2. Cyl. Plate Thickness _____
3. Mortar Lining Thickness _____
4. Mortar Coating Thickness _____
5. Proposed Slope Construction:
   Slope Ratio _____
   a. Show above in red
6. Pipe Manufacturer _____
7. Authorized Signature of
   Pipe Manufacturer _____

sectbs8.dgn

EASTERN MUNICIPAL WATER DISTRICT
Storm Drain Line K-1 Water Relocations Project

SECTION SC - SPECIAL CONDITIONS
SPECIAL PROVISIONS

SC-01. **Section F – General Conditions**. This project is being bid and administered by the City of Moreno Valley. Any reference to the word DISTRICT in section F – General Conditions of these specifications shall mean City of Moreno Valley. Eastern Municipal Water District **shall not be considered the OWNER** of this project during the bidding and construction phases.

SC-02. **Specification Precedence**. All the requirements contained within the main bid specification and within City of Moreno Valley Standards and Specifications shall supersede all requirements within EMWD Section F, with the exception of language that pertains to EMWD's water and sewer facilities and appurtenances.

SC-03. **Safety. Safety of all activities in connection with the work is of paramount and overriding importance. See Section 01000 - General Safety Requirements for details.**

A preconstruction safety conference shall be scheduled prior to the preconstruction conference to review the respective safety requirements and to discuss implementation of all health and safety provisions related to this project. The Contractor and District representatives shall be present.

Please note that the District reserves the right to suspend the work wholly or in part, for any time period as the District representative deems necessary, due to unresolved safety disputes. See Section 01000 - 1.04.

No additional compensation or contract time will be allowed for the period the work is wholly or in part suspended.

Should the contractor continue with the disputed work after having received a written notice of suspension, any work performed by the Contractor during the suspension shall be considered as having been done by the Contractor at the Contractor's own risk as a volunteer, and shall not entitle the Contractor to compensation or any other rights under the contract.

The Contractor shall submit an Injury and Illness Prevention Program and a Project Specific Safety Plan to the District at the pre-construction conference. The Contractor shall not begin work until the above referenced documents have been accepted by the District.

The Contractor shall conform to all applicable occupational safety and health standards, rules, regulations and orders established by local agencies, State of California, and California Division of Occupational Safety and Health Construction Safety Regulations (Cal Osha), including obtaining permits required by California Code of Regulations, Title 8, Sections 341 and 341 (a).

SC-04. Scope of Work . Under these Specifications the Contractor shall relocate existing 12" CML&C water pipeline and all other items necessary for the completion of work; including, but not limited to: the removal of the existing pipeline, welding of the existing pipeline, pipeline dewatering, trench shoring, associated appurtenances, pressure testing, and bacteriological testing. All work shall be performed in accordance with these specifications and the contract drawings, complete and in place.

SC-05. Location of Contract Work Site. The contract work site is located at Ironwood Avenue, six hundred fifty (650) feet east of Oliver Street in the City of Moreno Valley.

SC-06. Construction Period and Requirements . The contract time is dependent on the City of Moreno Valley's construction schedule. **The following documents shall be accepted by the District prior to any construction:**

A. Insurance Certificate(s)

B. Injury and Illness Prevention Program

C. EN-84: Specific Operating Safety Procedure (see section 01000)

Before any work of any subcontractor is started, the Contractor shall submit a copy of each subcontract to the District (see Section F-General Conditions, F-17, Subcontracts, d.Contract Provisions)

SC-07. Administrative Delay Liquidated Damages. Liquidated damages may also be applied to compensate the District for undue delays in the completion of punch list items, site clean-up, demobilization, and miscellaneous contract obligations after a notice of Substantial Completion has been filed. The cost to the District for administration, inspection, mileage, and other similar items would be extremely difficult to determine. For that reason, additional liquidated damages, known as Administrative Delay Liquidated Damages shall be imposed in the amount of **$500** per day, effective **30** days after the Substantial Completion date is filed or the Revised Completion date is reached, whichever is later. Charges will be assessed until the Final Completion date is issued by the Inspector.

SC-08. Construction Water. For work under this specification, the Contractor shall arrange for and pay for construction water. The contractor shall make arrangement for metering its use from Eastern Municipal Water District

(EMWD). The contractor shall coordinate with EMWD inspector for the location of closed EMWD facilities within the project limit for the availability of EMWD water.

Contractor shall provide all necessary piping and appurtenances, including pumps, to convey water to the work site. Arrangements for water from sources other than EMWD shall be the sole responsibility of the Contractor, and no additional compensation will be allowed.

SC-09. Additional Insured. The liability insurance required under Section F-04 under General Conditions shall include **EMWD and City of Moreno Valley**. The Contractor shall include Eastern Municipal Water District (EMWD) as additional insured as part of this contract, to include COMPLETED OPERATIONS, up to 5 years beyond the completion date, with endorsement form **"CG 2010 11/85"** (or similar), executed by the insurance carrier. **If a later addition date of CG 2010 is issued, a CG 20 37 form must be included for Completed Operations.**
Refer to F-04. Contractor's and Subcontractor's insurance under Section F-General Conditions for additional requirements

SC-10. Compliance with Storm Water Regulations (NPDES) for Discharge of Storm Water Runoff Associated with Construction Activity Order No. 2009-0009 DWQ (NPDES General Permit No. CAS000002). Construction projects under 1 acre do not require coverage under the General Permit or preparation of a Storm Water Pollution Protection Plan (SWPPP), but will require Best Management Practices (BMPs) to control and reduce discharges of pollutants associated with construction into storm drains and receiving waters. The contractor shall prepare, implement and maintain a BMP Plan showing location and type of BMPs to be implemented for the project. The contractor shall alter the plan, implementation and maintenance as necessary for the duration of the project.

SC-11. Preconstruction Conference. The Contractor shall schedule Pre-construction Conference with Eastern Municipal Water District (EMWD) prior to the start to any work within EMWD facilities. Please contact Michelle Burris @ (951) 928-3777 extension 4830 to schedule the pre-construction conference. City of Moreno Valley to attend.

The following items shall be presented at the pre-construction conference by the Contractor:

1. **Set of signed, approved EMWD plans for water**
2. **A copy of materials list stating the manufacturer and model number**
3. **Copy of cost breakdown**
4. **Three (3) copies of submittals on pipe used with size and cover letter**
5. **Copy of Recorded Easement, if any is required**
6. **Copy of Contractor's license (A or C-34 only)**

7. **Subcontractors list. *Note:* Each contractor must be licensed according to work performed.**
8. **Construction Schedule with start date, milestones and finish date**
9. **Copy of Annual Trench Shoring/Excavation Permit**
10. **Insurance certificate naming EMWD as additional insured**
11. **Injury and Illness Prevention Program**
12. **EN-84: Specific Operating Safety Procedures (see section 01000)**

SC-12. **Preconstruction Audio Video Recording (DVD)**. The Contractor shall make arrangements with a ***professional photographer,*** approved by the District, to prepare a full color pre-construction audio video recording on DVD of the project site with the Inspector present prior to mobilizing (refer to Section 01380 or 01381, whichever is applicable to these specifications) and provide the District with a copy.

SC-13. **Control Density Fill (CDF)**: The Contractor will be required to use CDF, in accordance with Section 02252 as backfill in areas under and around existing mainline utilities, and all utility crossings of the proposed underground piping and appurtenances. CDF shall be placed from the bottom of the excavation to the center grade of the utility, and shall extend five feet each side of the existing facility. All costs associated with furnishing and placing CDF shall be included in the respective bid item.

SC-14. **Or Equal Substitutions.** Products of manufacturers listed as equals to those specified must be submitted for review and approval by the District not later than the tenth (10th) day preceding the date for receipt of bids.

SC-15. **Pipeline Connection and Disinfection.** The Contractor shall notify the District one (1) week in advance of the planned pipeline connections and also provide 48 hour and 24 hour advance confirmation of when the work will be performed. The Contractor shall be responsible for dewatering the trench excavations as necessary.

Contractor shall be responsible for dewatering, dechlorination, and disposal of all water from pipeline testing/flushing activities. Discharge of all water must abide by the Santa Ana Regional Water Quality Control Board. The Contractor shall secure a permit by the SAWQCB for all discharges from testing and flushing activities.

Contractor shall also protect existing water pipelines from contamination during connection procedures. Contractor shall disinfect all new pipelines, pipeline connection closure materials and the existing pipeline at connection points per AWWA Section C-651. District may consider “swabbing” as a disinfection method; contractor to coordinate with EMWD construction inspector. All costs associated with connections to existing water pipelines shall be included in the appropriate bid item.

SC-16. Warranty Inspection: **Warranty inspection shall be conducted between the eleventh and sixteenth months following completion of all work and filing of the Notice of Acceptance**. Refer to detailed provision sections 09877 and/or 09878 for complete details.

SC-17. Construction Survey and Soils Tests. Upon Contractor's request, City of Moreno Valley will provide construction survey and soil/compaction testing for the project. However, any cost of re-staking or re-compaction due to the Contractor's negligence will be at the Contractor's expense. A 48-hour notice is required for survey and soil services. Saturdays, Sundays and holidays shall not be considered as including any portion of the 48-hour advance notice.
The Contractor shall notify City of Moreno Valley a minimum of three (3) weeks prior to start of construction to allow ample time for preparation of cut sheets and construction staking. Contractor shall use the construction stakes and cut sheets for pipeline and appurtenances construction. District and City of Moreno Valley will use them for inspection of the work. Contractor shall protect all survey monuments (including property corners) and stakes and he shall pay all costs to reestablish any monuments or stakes destroyed or disturbed during construction.

SC-18. Reference to District's Standard Drawings and Detailed Provisions. Any and all referenced Standard Drawings and Detailed Provisions shall be considered part of the contract drawings and specifications. All referenced Standard Drawings and Detailed Provisions of the District are available from the District upon request. The Contractor shall not be entitled to any compensation due to referenced documents not included in the Specifications and Contract Drawings.

SC-19. Shutdown Requirements, Work Restrictions, Ground Water Dewatering, and Coordination with EMWD Operations. Contractor shall coordinate the shutdown operation of existing systems with the District, to include EMWD's Inspector, and Operations and Maintenance personnel shall be contacted. No work shall be performed without two (2) weeks prior notice followed by forty-eight (48) hour prior and twenty-four (24) hour confirmation notices to the District. No work shall be done without a District representative present.

1. Prior to shut-down and tie-in work, Contractor shall expose existing pipeline tie-in points to determine actual location, elevation, depth, type, and O.D. of existing pipe at each connection location to the existing system. Contractor shall arrange for all tie-in and closure materials to be fabricated and on-site prior to system shut-down and tie-in work. In addition, pipeline(s) must have passed all required testing sequences prior to scheduling shut-down and tie-in work.

2. **Only EMWD Operations personnel will be allowed to operate existing valves for water system shut-downs and placing water system(s) back**

in operation.

3. Contractor shall be responsible for dewatering existing water pipelines to perform pipeline tie-in work. In addition, Contractor shall be responsible for de-chlorinating discharged water from dewatering process. Contractor shall consider the distinct possibility that the existing water system line valves will not achieve 100% closure and may cause water leakage during the tie-in procedures; therefore, Contractor may need to continuously dewater existing water pipelines during his tie-in work. Contractor shall include all costs associated with dewatering, including pumping, in the bid price of the respective pipeline connection/tie-in work.

4. Contractor shall protect existing water pipelines from contamination during connection/tie-in procedures.

5. Contractor shall disinfect all pipeline tie-in closure materials and the existing pipeline(s) at tie-in points per AWWA Section C-651.

6. **Contractor shall complete all dewatering, excavation, removal of existing pipeline, installation of new pipeline, trench backfill, disinfection, testing and connections to existing system within eight (8) hours from shut-down.** A temporary pipeline (highline) may be required at the contractor's option if work cannot be completed within the eight hour period to provide service to individual customers. EMWD strongly encourages the Contractor to find construction means and methods that will shorten the interruption of service to customers and businesses. **In addition, the Contractor shall be subject to liquidated damages in the amount of two thousand dollars ($2,000.00) per hour, for every hour the tie-in work exceeds the specified time limitation, cost to maintain water reliability, and any customer claims related to the shutdown work.**

7. The location of the existing water valves that will need to be operated to achieve the shutdown is determined by our water operations, with about 8,000 gallons to dewater.

Contractor shall install all piping and fittings for all connections as necessary to clear (1 foot minimum clearance) all existing utilities or interferences and to connect to existing facilities, all based on Contractor's field measurements, and all at no additional cost to District.

All costs associated with tie-ins shall be included in the bid and no additional compensation will be allowed.

SC-20. Locator Wire. Location wire is to be placed over all pipelines to be installed on this project as specified in Detail Provision Section 02718 and

Standard Drawing B-656. After all trench backfill operations are complete, the District shall pay for and conduct the locatability test to confirm that the wire is continuous. The Contractor shall be responsible for all costs to confirm, locate and repair any breaks in the location wire identified in the locatability test. In addition, the Contractor shall reimburse the District for all costs to retest repaired sections of the wire. The Contractor is advised to use care in the installation and backfilling operations to prevent damage to the wire.

SC-21. Noise Control Requirements. Noise suppression shall be practiced at all times to minimize disturbance to persons living or working nearby, and to the general public. The measures to be used in effecting noise suppression shall include, but are not limited to, equipping all internal combustion engines with critical residential silencers (mufflers), sound blankets shielding noise-producing equipment from nearest areas of human occupancy by locating in such positions as to direct greatest noise emissions away from such areas, and conducting operations in the most effective manner to minimize noise generation consistent with the execution of the contract in a timely and economic manner.

Noise control barrier walls and equipment shall be installed as needed to achieve a noise level of **65 db** or less at the property lines. Noise levels in excess of **65 db** shall be allowed only during critical operations for brief periods of time. Contractor shall make every reasonable effort to minimize levels during nighttime operations.

Barrier walls installed shall consist of fiberglass-filled curtains and shall have adequate transmission loss and a minimum wall height of 24 feet. The noise control barrier walls shall be designed to preclude structural failure due to such factors as winds, shear, shallow soil failure, earthquakes, and erosion. The length, height, and location of noise control barrier walls shall be adequate to assure proper acoustical performance.

SC- 22. Existing Underground Utilities and Potholing for Existing Utilities. Unless otherwise indicated on the plans or directly by the utility owner, all utilities shall be protected in place and service maintained as described in Section 02201 Part 1.02 of the Specifications. Utilities crossing the proposed water pipeline alignment are plotted on the plan view of the plans. The utilities were plotted based on information provided from the respective utility owners. The accuracy of plotted utilities is not guaranteed as indicated in Section F-25 of the General Conditions.

Existing utilities have been identified and located on the plans based on the best information available. The Contractor is responsible for performing exploratory excavations (potholing) along the alignment of the project to confirm location of existing utilities and to establish connection requirements to existing pipelines. **All Contractors under contract with EMWD are hereby granted permission to use vacuum excavation on EMWD facilities. Vacuum excavations may not be used on any other facilities unless written permission is obtained from the**

owner of the facility in accordance with State Law 4216. Any damage to any facilities while performing vacuum excavation will be at the sole cost of the contractor for repairs of the facilities to the satisfaction of EMWD inspector.

The Contractor shall field survey the elevation and location of utilities, including tie-in points, and provide the information to the District's inspector a minimum of two weeks ahead of construction to permit design revisions should a conflict arise.

Existing utility locations are based on available records and are considered approximate.

Where underground main conduits such as water, gas, sewer, telephone, electric power, or cable television are shown on Construction Drawings, Contractor shall assume that a lateral from each utility facility extends to every parcel or property, whether or not a service lateral is shown.

In some locations, the type of existing waterlines is noted on the Construction Drawings. Said information, where shown, is based on information shown on available Construction Drawings. Said information is not guaranteed to be accurate.

At least two (2) weeks prior to any construction, the potholing sub-Contractor shall excavate, expose, and determine ("pothole") the exact location and depth of each and every utility crossing the proposed water line. All facilities shown specifically on the Construction Drawings, or which have been marked by their respective owners shall be potholed. All potholing shall be completed and the results furnished to the District at least fifteen (15) working days prior to any construction including saw cutting or grinding pavement. Contractor shall adjust locations of proposed water lines as necessary, all at no cost to the District, to avoid all utilities as shown on the Construction Drawings, or as located in the field during Contractor's potholing operation.

Changes or delays caused by Contractor's failure to perform "potholing" shall not be eligible for extra work compensation or time extension.

Upon learning of the existence or location of any utility facility omitted from or shown incorrectly on Construction Drawings, or improperly marked or otherwise indicated, Contractor shall immediately notify the District, providing full details as to depth, location, size and function.

Contractor shall not interrupt or disturb any utility facility without authority from the utility company or order from District. Where protection is required to ensure integrity of utility facilities located as shown on the Construction Drawings or visible to Contractor or marked or otherwise indicated as stated herein, Contractor shall, unless otherwise provided, furnish and place all necessary protection at no additional cost to the District.

Contractor will construct the proposed waterline adjacent to existing utilities. District has no information about compaction of trench backfill for said utilities. If said trench backfill fails during construction of the proposed waterline, Contractor shall remove and replace said backfill, compact as specified herein, and remove and replace any asphalt concrete pavement as required, all at no additional cost to the District.

Contractor shall have a sufficient supply of repair or replacement materials on the job site to repair or replace damaged or destroyed facilities including, but not limited to, water main and water services. Repairs shall be made with like materials and said repairs shall be approved by the District and owners of damaged utilities prior to backfill. All cost associated with potholing, protecting in place, relocating, and/or repair of existing utilities shall be included in the bid prices and no additional compensation will be allowed.

SC-23. Provisions for Securing of Trenches. Before making any excavation or trench 5 feet or more in depth, Contractor shall submit to the District completed Trench Shoring Submittal form EM-57 in accordance with Detailed Provision Section 02201 1.03D.

Trenches in the unpaved street must be backfilled and compacted to 95% relative compaction minimum at the end of each work day an in accordance with the jurisdictional agencies encroachment permit. The Contractor shall provide complete unobstructed access to each driveway at all times. Cost associated with securing of trenches shall be included in the bid and no additional compensation will be allowed.

SC-24. Trench Dewatering, Rock Removal and Disposal, and Poor Material Backfill. The Contractor shall be responsible for dewatering the trench excavations as necessary. All costs associated with providing material, equipment, power supply, labor, etc. associated with diverting surface water runoff from the pipe trench or dewatering surface water that enters trench plus dewatering of minor amounts of water within the trench shall be deemed as included as part of the Bid price. Where ground water is found within the pipe trench, the Contractor shall be responsible for providing equipment including establishment of well points (if necessary), power supply, materials, labor, and etc. required to adequately remove water from within trench during construction. All costs associated with removal of ground water from within the trench shall be included in the Bid price and no additional compensation will be made.

All trench dewatering shall be performed in conformance with all safety regulations.

Where rock is encountered, it shall be removed below grade, and trench backfilled with suitable material to provide a compacted earth cushion with a thickness under the pipe per EMWD Standard Drawing B-286B and B-408 or directed by EMWD

inspector. All rock removal shall be the responsibility of the Contractor and any expense associated with rock removal shall be deemed as included as part of the Bid price. All permits, notices, etc. for blasting shall be the Contractor's responsibility and no additional compensation will be made. Contractor shall provide written notification to EMWD and all property occupants within five hundred (500) feet of the project site a minimum of forty-eight (48) hours before blasting.

Where material at the bottom of the trench is found to be unstable, soft, or spongy, such material shall be removed to a depth as determined by District inspector and replaced with suitable material. All costs associated with excavation, removal and disposal of unstable material and replacement of suitable material shall be included within the Bid price and no additional compensation will be made.

Contractor is expected to investigate soil conditions before bidding the project. Cost for all associated work shall be included in the bid.

SC- 25. Removal and Restoration of Existing Improvements. All existing and new improvements including, but not limited to, curbs, gutters, cross gutter, spandrels, driveways, sidewalks, wall, fences, sprinklers systems, lawns, shrubs trees, storm drains, traffic sign and traffic detector loops which are damaged or removed during the course of construction of the project shall be restored or replaced to a condition equal to or better than the existing improvements.

The removal and restoration of existing improvements shall be in accordance with the applicable provisions of these specifications, Standard Specifications, Standard Drawings, Contract Drawings, and the permitting authority's or utility's requirements.

SC-26. Staging Area within Right of Way. The Contractor shall preserve survey stakes of Right-of-Way limits and points set for lines, grades or measurements of work in their proper places unless removal is authorized by the Engineer. Materials, equipment, and spoils shall be placed within the right-of-way of Ironwood Avenue to avoid encroaching into private properties. **Refer to Section F-21 Additional Rights-of-Way,** for Contractor to acquire additional land for his construction yard beyond the limits of Right-of-Way.

SC-27. Warranty Inspection: **Warranty inspection shall be conducted between the eleventh and sixteenth months following completion of all work and filing of the Notice of Acceptance**. Refer to detailed provision sections 09877 and/or 09878 for complete details.

SC-28. Contractor Cooperation. Contractor shall cooperate with the District, District Representatives and all other jurisdictional agencies. The District will have representatives on site to observe and verify compliance with Contract

Documents. Contractor shall notify the District a minimum of **two (2) weeks** prior to commencing construction.

SC-29. **Data to be Submitted by Contractor.** As soon as practicable, and consistent with the schedule of construction, the Contractor shall submit the following data to EMWD for approval. All materials supplied shall be in accordance with EMWD's approved manufacturers' list. Submittals shall be provided prior to purchase and installation**.** Contractor shall refer to specific Divisions and Technical Specifications for additional submittal requirements.

Prior to beginning construction, Contractor shall submit emergency phone numbers for the construction superintendent, construction foreman, and all company principals.

After receipt of such data, EMWD shall give early approval or correction to expedite the execution of the work under this Contract. For the first original submittal, the Contractor shall allow for 10 days for the EMWD's Engineer to review from date of receipt. The second submittal, if required, will take 5 days for EMWD's Engineer to review from date of receipt.

The EMWD's approval of the Contractor's submittal data shall not relieve the Contractor from having the entire responsibility for the correctness of details and dimensions. The Contractor shall assume all responsibility and risk for misfits due to any errors in the Contractor's submittal data.

SC-30. **Records of Construction**. Contractor shall keep and maintain, at the job site, one record set of Construction Drawings as specified in the General Conditions, Section F-Labor and Construction, F-08 "Reports, Record, and Data".

SC-31. **Fugitive Dust and Overspray**. The Contractor shall comply with all requirements of the South Coast Air Quality Management District (SCAQMD) Rule 403. Contractor is responsible for and shall employ an approved method for dust control monitoring on the job site and shall comply with Part 3.02A, "Dust Abatement" of Section 02201-7, and "Construction Method & Earthwork" of these specification.

SC- 32. **Emergency Vehicle, Businesses and/or Residents Access.** Contractor shall provide unobstructed access at all time to businesses and/or resident's driveway within the project limit. The Contractor will be responsible for notifying the businesses and/or residents 72 hours in advance that construction activity will occur in front of their businesses and/or residences and that their driveways will be blocked by these construction activities.

The contractor shall be responsible for providing emergency vehicles access to all businesses and/or residents and around the worksite at all times. The contractor will be required to notify the local fire department and ambulance service and provide them with access routes through the construction area and a schedule

indicating when access through any street will be obstructed by construction traffic. Costs associated with providing emergency vehicles, businesses and/or residences access shall be included in the bid and no additional compensation will be allowed therefore.

SC-33. Disposal of Excess Excavated or Removed Material. All excess excavation or removed material shall be the property of the Contractor and shall be removed and disposed away from the project site to an approved disposal area through the County or City. In no instance shall these soils become a public nuisance or threat to public safety.

All cost associated with disposal of excess excavated or removed material shall be included in the bid and no additional compensation will be allowed.

SC-34. Notifications. Contractor shall notify the District, all residents, all commercial and public establishments including of impending works as follows:

1. For the District, Contractor shall notify the District's inspector two working days prior to the start of construction. All work performed without benefit of inspection shall be subject to rejection and removal.
2. Printed notices shall be sent to residences, commercial, and public establishments affected by the work at least one week in advance of construction. Public establishments include but not limited to police stations, fire stations, ambulance services, trash collection services, post office, schools and libraries. Said notices shall first be approved by the District and shall contain a general description of the work, dates work will be performed, descriptions of areas where travel and parking will be restricted, and names of streets which will be closed to through traffic or where traffic will restricted.

SC-35. Operation of Existing Facilities. Contractor shall not operate any existing facilities, including opening or closing of existing pipeline valves, appurtenances and electrical equipment. If required, Contractor shall be fully responsible for coordinating activities that require operation of District or other agencies facilities

SC-36. Protection of Buried Metal Appurtenances. Besides epoxy coated valves or fittings, all metal appurtenances, including restraint fittings, shall be wax taped. The wax-tape coating shall conform to AWWA C217, and shall consist of three parts: surface prime, wax-tape and outer covering:

1. The prime shall be a blend of petrolatum, plasticizer and corrosion inhibitors having a paste like consistency such as Trenton wax-tape prime, or equal.

2. The wax-tape shall be aplastic-fiber felt tape, 50 to 70 mils thick, and saturated with a blend of petrolatum, plasticizer and corrosion inhibitors

that is easily formed over irregular surfaces such as Trenton #1 wax-tape, or equal.

3. The outer covering shall be plastic wrapper consisting of three 50 gauges, clear polyvinylidene chloride, and high cling membranes wound together as a single sheet such as Trenton poly-ply, or equal.

4. Fusion bonded epoxy coated valves and fittings shall be closely inspected prior to installation. Any scratches or damages shall be recoated to manufacture's standards or 3-part wax tape system.

In addition to the above, alkalized backfill shall be used within the pipe zone and above/around all steel appurtenances (including restraints), and it shall consist of 50 LBS of hydrated lime per cubic yard of sand.

SC-37. **Painting of Appurtenances.** The contractor shall paint or re-paint all new, existing and relocated appurtenances associated with this work per EMWD Standards and painting requirements

Full compensation for conforming to the requirements of this special condition, not otherwise provided for, shall be considered as included in the prices paid for the various contract items of work involved, and no additional compensation will be allowed therefore.

[Page Left Intentionally Blank]

EASTERN MUNICIPAL WATER DISTRICT
STORM DRAIN LINE K-1 WATER RELOCATIONS PROJECT

SECTION P - CONTRACT DRAWINGS

P-01. General. The location of the work, its general nature and extent, the outline of the land owned or controlled by the District and the form and general dimensions of the facilities (i.e. pipelines, appurtenances, etc.) are as shown on the drawings attached and made a part of this Specification as listed below.

P-02. Standard Drawings.

Standard Drawings are hereby attached by reference: See following website: http://www.emwd.org/construction/developer-project-help-desk/engineering-standards-specifications-and-drawings/water-standard-drawings to download.

Drawing Number	Drawing Title
B-271	Saddle Outlets - 3/4" to 36"
B-286B	Trench Backfill
B-288	Steel Flanges
B-304	Butt Strap Details
B-598	1" Air Valve Installation, 1" copper Tubing
B-638	Steel Cylinder Pipe-Field Joint Details Welded & Bonded Rubber Gasket
B-656	Locator Wire Installation
B-659	Air Test Details
B-661	Thermite Weld Details
B-662	Test Stations: Line Current, Basic & Pipe with Casing
B-668	Valve Cap & Riser Detail
B-934	Recessed Trench Plate Detail **or**
MVSI-133-0	Recessed Trench Plate Detail (City of Moreno Valley Standard)

P-03. Construction Drawings.

Drawing Number	Drawing Title
SK- 1260	12" CML&C Water Relocation Plan

City of Moreno Valley Improvement Plans (Reference Only)

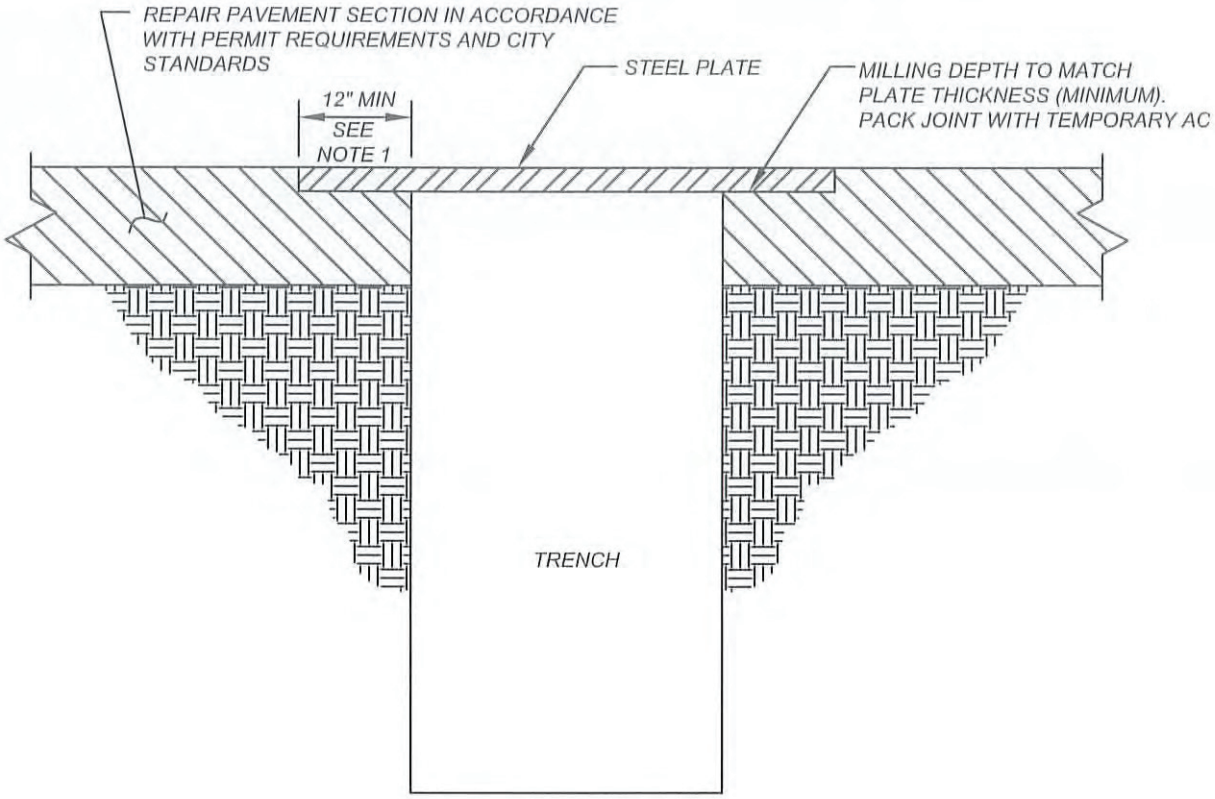

TYPICAL TRENCH PLATE DETAIL

NOTES:

1.) THE CONTRACTOR SHALL PROVIDE A MINIMUM 12" LAP OF STEEL PLATE ON EACH SIDE OF TRENCH TO ASSURE NO SLIPPING OF PLATE OR COLLAPSING OF TRENCH WALL. WHERE 12" LAP CANNOT BE MET, ENGINEERING DESIGN IS REQUIRED AND SHALL BE APPROVED BY THE CITY ENGINEER.

2.) STEEL PLATE MUST FIT SNUG WITHIN THE RECESSED AREA AND INSTALLED TO OPERATE WITH MINIMUM NOISE.

3.) THE PAVEMENT SHALL BE COLD PLANED TO A DEPTH EQUAL TO THE THICKNESS OF THE PLATE AND TO A WIDTH AND LENGTH EQUAL TO THE DIMENSIONS OF THE PLATE.

4.) THIS STANDARD SHALL BE IMPLEMENTED ON ALL PROJECTS WITHIN THE VEHICULAR TRAVELED WAY UNLESS OTHERWISE APPROVED BY THE CITY ENGINEER.

5.) MULTIPLE PLATES MUST BE TACK WELDED AS NEEDED TO SECURE PLATES, 6" MINIMUM.

6.) ALL PLATES MUST MEET REQUIRED TRAFFIC LOADS, AND BE SKID-RESISTANT. THE CONTRACTOR SHALL BE RESPONSIBLE FOR THE APPROPRIATE SELECTION AND MAINTENANCE OF THE STEEL PLATES.

7.) STEEL PLATES MUST BE REMOVED AND PERMANENT PAVEMENT SHALL BE PLACED WITHIN FIFTEEN (15) WORKING DAYS OR AS APPROVED BY THE CITY ENGINEER.

8.) ADVANCE WARNING SIGNS "STEEL PLATES AHEAD" SHALL BE PLACED WHEN PLATING IS WITHIN THE TRAVELED WAY.

NOT TO SCALE

CITY OF MORENO VALLEY DECEMBER 3, 1984	RECOMMENDED: DIVISION MANAGER 1/21/14 DATE APPROVED: PUBLIC WORKS DIRECTOR/ CITY ENGINEER 1/29/14 DATE	CITY OF MORENO VALLEY PUBLIC WORKS DEPARTMENT - CAPITAL PROJECTS DIVISION **RECESSED TRENCH PLATE DETAIL**	STANDARD PLAN **MVSI-133-0** SHEET 1 OF 1

EMWD DETAILED PROVISIONS

EMWD DETAILED PROVISIONS

EMWD General Conditions are hereby attached by reference: See following website:http://www.emwd.org/construction/capital-improvement-project-standards/emwd-standard-detailed-provisions to download.

01000	General Safety Requirements	1 thru 8
01380	Pre-Const. Audio Video Taping: Pipelines & Roadways	1 thru 4
02201	Construction Methods and Earthwork	1 thru 28
02221	Trenching, Backfilling, and Compacting	1 thru 10
02252	Control Density Fill	1 thru 4
02718	Installation of Water Pipeline	1 thru 20
02725	Installation of Copper Pipe and Tubing	1 thru 2
09810	Tape Wrap for Insulated Joints	1 thru 2
09900	Painting and Protective Coatings	1 thru 28
15059	Welded Steel Fittings	1 thru 2
15061	Steel Cylinder Water Pipe	1 thru 14
15136	Air Valves	1 thru 2

EMWD Document Appendix A

APPROVED MATERIALS LIST

(Capital & Developer Projects)

https://www.emwd.org/sites/main/files/file-attachments/appendixaapprovedmaterials.pdf?1611172889

UPDATED

1.11.2021

APPENDIX J

MOU DISTRICT TRANSPORTATION DEPARTMENT_MARCH 2020

MEMORANDUM OF UNDERSTANDING

RIVERSIDE COUNTY ON BEHALF OF ITS
TRANSPORTATION DEPARTMENT

AND

RIVERSIDE COUNTY FLOOD CONTROL
AND WATER CONSERVATION DISTRICT

FOR

DESIGN, CONSTRUCTION, INSPECTION AND MAINTENANCE

OF

FLOOD CONTROL DRAINAGE FACILITIES

REVISED: March 2020

[PAGE INTENTIONALLY LEFT BLANK]

IT IS MUTUALLY AGREED AS FOLLOWS:

This MOU is subject to termination by either party with a written notice of 90 days given prior to the effective termination date.

All notices shall be given in writing and shall be addressed as provided below for the respective party:

Transportation: Riverside County Transportation Department
4080 Lemon Street, 8th Floor
Riverside, CA 92507
Attn: Patricia Romo, Director of Transportation
Email: promo@rivco.org

District: Riverside County Flood Control and Water Conservation District
1995 Market Street
Riverside, CA 92501
Attn: Jason Uhley, General Manager-Chief Engineer
Email: juhley@rivco.org

The District's General Manager-Chief Engineer and Transportation Director are hereby authorized to approve future amendments to this MOU.

This MOU is the result of negotiations between the Agencies and the advice and assistance of their respective counsel.

This MOU shall be effective upon signature by both Agencies. If the MOU is signed on different dates, then the last date the MOU is signed by an Agency shall be the effective date of the MOU.

PATRICIA ROMO
Director of Transportation

JASON E. UHLEY
General Manager-Chief Engineer

TABLE OF CONTENTS

Title			Page
Section I -	Definitions		2 - 3
	Section 1.1	Definitions	
Section II -	Responsible Agency for Drainage Facilities Elements		4 - 12
	Section 2.1	Category A – Storm Drains	
	Section 2.2	Category B – Detention Basins	
	Section 2.3	Category C – Bridges	
	Section 2.4	Category D – Channels	
	Section 2.5	Category E – Miscellaneous	
	Section 2.6	Category F – Water Quality Management Facilities	
Section III -	Drafting Standards for Drainage Facilities		13
	Section 3.1	Drafting Manual	
Section IV -	Plan Check and Inspection Procedures for Drainage Facilities		13 – 14
	Section 4.1	Plan Check Procedures	
	Section 4.2	Inspection Procedures	
Section V -	Cast-in-Place Concrete Pipe for Drainage Facilities		14 – 16
	Section 5.1	Standard Specification References	
	Section 5.2	Design Manual References	
	Section 5.3	Specific Requirements and Specifications	
Section VI -	Special Provisions and Detailed Specifications for Drainage Facilities		17 - 37
	SPECIAL PROVISIONS		
	Section 6.1 – General		17
	6.1.1	References	
	6.1.2	Engineer	
	Section 6.2 through Section 6.4 – Not Used		17
	Section 6.5 – Project Site Maintenance		17
	Section 6.6 – Special Requirements		18 - 20
	6.6.1	Record Drawings	
	6.6.2	Construction Tolerances	
	6.6.3	Confined Space	
	Section 6.7 through Section 6.9 – Not Used		20

TABLE OF CONTENTS – CONTINUED

Page

DETAILED SPECIFICATIONS

Section 6.10 through Section 6.13 – Not Used 20

Section 6.14 – Earthwork 20 – 23
- 6.14.1 General Excavation Requirements
- 6.14.2 General Fill and Backfill Requirements
- 6.14.3 Testing
- 6.14.4 Filter Material
- 6.14.5 Concrete Slurry

Section 6.15 – Trench Safety System 23
- 6.15.1 General Requirements

Section 6.16 – Concrete Construction 23 – 29
- 6.16.1 General Requirements
- 6.16.2 Material and Methods
- 6.16.3 General Reinforcing Steel Requirements
- 6.16.4 Consistency
- 6.16.5 Placing
- 6.16.6 Form Removal and Finish
- 6.16.7 Curing
- 6.16.8 Controlled Low Strength Material (CLSM) Curing
- 6.16.9 Joints
- 6.16.10 Weepholes
- 6.16.11 Use of the Structural Concrete Slabs
- 6.16.12 Reinforced Concrete Box
- 6.16.13 Manholes
- 6.16.14 Use of Bridge or Box Deck Slabs

Section 6.17 – Concrete Pipe 30 - 32
- 6.17.1 Description
- 6.17.2 Reinforced Concrete Pipe
- 6.17.3 Pipe on Curves
- 6.17.4 Cast-in-Place Concrete Pipe (CIPP)
- 6.17.5 Video Inspection

Section 6.18 – Air-Placed Concrete 32 – 33
- 6.18.1 Air-Placed Concrete

Section 6.19 – Not Used 34

TABLE OF CONTENTS – CONTINUED

		Page
Section 6.20 – Fences and Gates		34
6.20.1	Chain Link Fence	
6.20.2	Double Drive Gates	
6.20.3	Fencing on Boxes and Bridges	
Section 6.21 – Miscellaneous		34 - 35
6.21.1	Description	
6.21.2	Miscellaneous Iron and Steel	
6.21.3	Corrugated Metal Pipe	
6.21.4	Subdrain	
Section 6.22 through Section 6.25 – Not Used		35
Section 6.26 – Stonework		35 - 36
6.26.1	Description	
6.26.2	General	
6.26.3	Rock Protection Fabric	
Section 6.27 through Section 6.29 – Not Used		36
Section VII - Maintenance Acceptance for Drainage Facilities		36 - 37
Section 7.1	Notification of Maintenance Acceptance	
Section 7.2	Release of Bonds	
Section 7.3	Record Drawings	
Section 7.4	Unmaintained Projects	

MEMORANDUM OF UNDERSTANDING

This Memorandum of Understanding ("MOU") is entered into March 2020 between the Riverside County Transportation Department ("Transportation") and the Riverside County Flood Control and Water Conservation District ("District") regarding flood control and drainage facilities within the unincorporated area of Riverside County. Transportation and District may be referred to individually as "Agency" and collectively as "Agencies".

RECITALS

A. This MOU sets forth each Agency's respective understanding and commitments regarding the various processes required for the operation and maintenance of drainage facilities within District's jurisdictional boundaries. The purpose of this MOU is an attempt to streamline the review process by both Agencies and avoid potential conflicting requirements to the public and the development community, which includes but is not limited to the design, plan check, construction, inspection, specifications, operation, and maintenance of drainage facilities.

B. This MOU replaces the previous MOU dated June 24, 2008 in its entirety.

C. This MOU is intended by both Agencies hereto as a final expression of their understanding with respect to the subject matter hereof and as a complete and exclusive statement of their commitments and responsibilities thereof and supersedes any and all prior understandings, oral or written, in connection therewith.

D. The MOU originally approved on June 24, 2008 by the Board of Supervisors acting on behalf of each Agency authorized District's General Manager-Chief Engineer and Transportation Director to approve future amendments to the MOU.

E. Transportation and District each pledge to cooperate in regard to the operation and maintenance of their respective facilities as set forth herein and to discharge their respective maintenance responsibilities in an expeditious fashion so as to avoid the creation of any nuisance condition or undue maintenance impact upon the other Agency's facilities.

SECTION I - DEFINITIONS

1.1 Definitions - The following definitions shall apply:

- **Bleeder Pipe** – A small, interim storm drains whose primary purpose is to provide a low flow outlet for fully sized drainage facilities.

- **Catch Basin** – A curb inlet or drop inlet located wholly within public right of way and constructed in accordance with Transportation Department Standard Drawings, as defined herein.

- **Connector Pipe** – A small, underground pipe located within public right of way or a Transportation-accepted drainage easement that conveys flows from a Catch Basin to a District Storm Drain or a Transportation Storm Drain, as defined herein.

- **District Facility** – A District Storm Drain, a Detention Basin that is identified in a Master Drainage Plan or designated by the District as a Regional Facility, a Levee or Slope Revetment, a Concrete or Greenbelt Channel or a Dam, all as defined herein, that is located within public right of way, District right of way or a District-accepted drainage easement.

- **District Right of Way** – Any right of way owned by the District in either fee, easement, lease, permit or otherwise that allows District ingress or egress rights for the purpose of operations and maintenance. This includes public right of ways.

- **District Storm Drain** – An underground stormwater drainage facility that meets the following requirements (i) a pipe larger than 36 inches in diameter, or equivalent cross-sectional area, or a reinforced concrete box not less than 4' (H) x 4' (W), (ii) is located within public right of way or a District accepted drainage easement, and (iii) conforms with District design and engineering standards. Exceptions are to be mutually agreed upon in writing by Transportation and District.

- **Greenbelt Channel** – An open channel facility located within District right of way that either does not require concrete slope protection, or utilizes alternative slope and bed stabilization methods, such as rock armoring, and which may also incorporate riparian vegetation corridors or public trail elements into the facility design. Greenbelt Channels include ultimate earthen channels.

- **Private Drainage Facility** – A facility that collects, conveys, detains or retains stormwater flows, and which is located on private property and outside of any District or County accepted drainage easements.

- **Regional Basin** – A drainage detention facility that includes 100-year route down basins or provides flood protection for multiple projects. A regional basin does not include water quality basins or basins located on private property.

- **Road Culvert** – A drainage facility whose primary function is to convey stormwater flows across road right of way below the traveled way.

- **Standard Drawings** – County of Riverside, State of California – Road Improvement Standards and Specifications.

- **Swale** – A roadside ditch located outside the shoulder but within the public right of way or an accepted drainage easement. A Swale as defined herein is of a trapezoidal or "V" section and typically 2 feet or less in depth, with a sideslope that is 2:1 or flatter.

- **Transportation Facility** – A Transportation Storm Drain, Road Culvert, Catch Basin, Down Drain or Swale, all as defined herein, that is located within public right of way or a Transportation-accepted drainage easement.

- **Transportation Storm Drain** – An underground stormwater drainage facility that meets the following requirements: (i) is a pipe 36 inches or smaller in diameter, or equivalent cross-sectional area, (ii) is located within public right of way or a Transportation accepted drainage easement, and (iii) conforms with Transportation design and engineering standards. Exceptions are to be mutually agreed upon in writing by Transportation and District.

- **Transportation Right of Way** – Any right of way owned by Transportation in either fee, easement, lease, permit or otherwise that allows Transportation ingress or egress rights for the purpose of operations and maintenance. This includes public right of ways.

SECTION II –
RESPONSIBLE AGENCY FOR DRAINAGE FACILITIES ELEMENTS

2.1 Category A – Storm Drains -

CATEGORY A – STORM DRAINS		
Facility	**Element of Responsibility**	**Responsible Agency**
Category A-1 District Storm Drains (Larger than 36-inches) (Including associated headwalls and wingwalls)	Design Review, Inspection and Maintenance[1]	District
Category A-2 Transportation Storm Drains (36-inch diameter and below) (Including associated headwalls and wingwalls)	Design Review[2], Inspection and Maintenance[1]	Transportation
Category A-3 Road Culverts that *connect* to an existing or planned District Drainage Facility	Design Review and Inspection	District/Transportation
	Structural Maintenance	Transportation
	Maintenance (Sediment and Debris Removal)	District (After the connection to the District Drainage Facility is accepted)
	Maintenance (Sediment and Debris Removal)	Transportation (Until connected to District facility)

[1] Generally, storm drain sizes 39" and larger will be maintained by District, and storm drain sizes 36" or less will be maintained by Transportation. However, on a case by case basis, these responsibilities can be reassigned, if mutually agreed upon in writing by both Agencies.

[2] Transportation will take the lead on the design review; however, the District may be requested to review specific drainage facilities. If the County requests the District to review a project, that review shall include all drainage facilities, including Transportation Storm Drains, access, and associated headwalls and wingwalls, unless otherwise agreed upon in writing.

CATEGORY A – STORM DRAINS (CONTINUED)		
Facility	**Element of Responsibility**	**Responsible Agency**
Category A-4 Road Culverts that *do not connect* to an existing or planned District Drainage Facility	Design Review	Transportation[3]
	Inspection and Maintenance	Transportation
Category A-5 Private Drainage Facility (also see Category E-7)	Design Review	Transportation[3]
	Inspection	Building and Safety/ Transportation
	Maintenance	Private Property Owner or a County-approved maintenance mechanism (Homeowners Association, CFD, CSA, etc.)
Category A-6 Bleeder Pipes **Note:** Transportation Dept. policy generally prohibits construction of Bleeder Pipes within road right of way	Design Review	Transportation[3]
	Inspection and Maintenance	Agency accepting maintenance of upstream facility
Category A-7 Catch Basins (including connector pipes) which serve District Facilities	Design Review	District[3]
	Inspection and Maintenance	Transportation
Category A-8 Catch Basins (including connector pipes) which serve Transportation Facilities	Design Review	Transportation
	Inspection and Maintenance	Transportation

[3] Transportation will take the lead on the design review; however, the District may be requested to review specific drainage facilities. If the County requests the District to review a project, that review shall include all drainage facilities, including Transportation Storm Drains, access, and associated headwalls and wingwalls, unless otherwise agreed upon in writing.

2.2 Category B – Detention Basins -

CATEGORY B – DETENTION BASINS		
Facility	**Element of Responsibility**	**Responsible Agency**
Category B-1 Detention Basins (Master Drainage Plan Facilities)	Design Review, Inspection and Maintenance	District
Category B-2 Regional Basins (Non-Master Drainage Plan Facilities)	Design Review, Inspection and Maintenance	District
Category B-3 Detention Basins (Increased Runoff / Non-Master Drainage Plan Facilities)	Design Review	Transportation[4]
	Inspection	Transportation
	Maintenance	Private Property Owner or a County approved maintenance mechanism (Homeowners Association, CFD, CSA, etc.)
Category B-4 Basin Inlet and Outlet Works (Increased Runoff Detention Basins)	Design Review	District/Transportation[4]
	Inspection	District (District Maintained Facilities)
	Inspection	Transportation (facilities impacting Transportation Facilities) Building and Safety (Private Facilities)
	Maintenance	Private Property Owner via a County approved maintenance mechanism (Homeowners Association, CFD, CSA etc.)

[4] Transportation will take the lead on the design review; however, the District may be requested to review specific drainage facilities. If the County requests the District to review a project, that review shall include all drainage facilities, including Transportation Storm Drains, access, and associated headwalls and wingwalls, unless otherwise agreed upon in writing.

2.3 Category C – Bridges -

CATEGORY C - BRIDGES		
Facility	**Element of Responsibility**	**Responsible Agency**
Category C-1 Bridges (crossing over District facilities)	Design Review	District (where hydraulic calculations are required by District's conditions of approval)
	Design Review (including structural check) and Inspection	Transportation
	Maintenance (structural)	Transportation
	Maintenance (debris and sediment removal within the District Facility, to maintain the conveyance under the bridge)	District

2.4 Category D – Channels -

CATEGORY D - CHANNELS		
Facility	**Element of Responsibility**	**Responsible Agency**
Category D-1 Concrete Channels (including Regional or Master Drainage Plan facilities or extensions located within District right of way thereof) **Note:** Transportation policy generally prohibits construction of Concrete Channels within road right of way	Design Review, Inspection and Maintenance	District
Category D-2 Concrete Channels (including non-Master Drainage Plan facilities located within road right of way) **Note:** Transportation policy generally prohibits construction of Concrete Channels within road right of way	Design Review	Transportation
	Inspection and Maintenance	Transportation
Category D-3 Interim Earthen Channel Outlets (within existing road right of way) **Note:** Transportation policy generally prohibits privately maintained facilities in the road right of way.	Design Review	District or Transportation
	Inspection	Agency inspecting upstream facility
	Maintenance	Transportation (once road improvements are accepted into County maintained system; otherwise, through County-approved public maintenance mechanism) (CFD, CSA etc.)

CATEGORY D – CHANNELS (CONTINUED)		
Facility	**Element of Responsibility**	**Responsible Agency**
Category D-4 Interim Earthen Channel Outlets (outside of existing road right of way)	Design Review	Transportation
	Inspection	Agency inspecting upstream facility
	Maintenance	Private Property Owner (no official acceptance of public maintenance)
Category D-5 Greenbelt Channels or Ultimate Earthen Channels	Design Review and Inspection	District and Transportation (Agency roles to be determined prior to issuance of conditions of approval)
	Maintenance (structural, lines and grades)	District (within District Right of Way)
	Maintenance (landscaping, trail or recreation elements)	District-approved maintenance mechanism (CFD, CSA, etc.)

2.5 Category E – Miscellaneous -

CATEGORY E - MISCELLANEOUS		
Facility	**Element of Responsibility**	**Responsible Agency**
Category E-1 Fences and Guardrails (across Reinforced Concrete Box (RCB) headwalls and Bridges or any other drainage facility fencing)	Design Review	District (within District Right of Way) Transportation (within Transportation Right of Way)
	Inspection	Agency inspecting related facility
	Maintenance	Transportation (within Transportation Right of Way)
	Maintenance	District (within District Right of Way)
Category E-2 Retaining Walls (supporting District channel access roads inside or outside of road right of way)	Design Review (including structural check), Inspection and Maintenance	District
Category E-3 Emergency Escape Ditches (100-year overflow ditch over District Storm Drains)	Design Review	District
	Inspection	District
	Surface Maintenance	Private Property Owner (no official acceptance of public maintenance)
Category E-4 Emergency Escape Ditches (100 year overflow ditch over Transportation Storm Drains)	Design Review	District and Transportation
	Inspection	Transportation
	Surface Maintenance	Private Property Owner (no official acceptance of public maintenance)

CATEGORY E – MISCELLANEOUS (CONTINUED)		
Facility	**Element of Responsibility**	**Responsible Agency**
Category E-5 Drainage Easement (offered for dedication but not accepted by County or District)	Design Review	District or Transportation
	Maintenance	Private Property Owner (no official acceptance of public maintenance)
Category E-6 Drainage Easement (offered for dedication and accepted by County or District)	Design Review	District or Transportation
	Maintenance	District (within District accepted easement) Transportation (within Transportation accepted easement)
Category E-7 Brow Ditches, Terrace Ditches and Down Drains (located within Drainage Easement offered for dedication to County whether accepted or not; (typically not accepted))	Design Review	Building and Safety/Transportation[5] District (only where required by District through entitlements)
	Inspection	Building and Safety/Transportation
	Maintenance	Private Property Owner (no official acceptance of public maintenance)
Category E-8 Levees and Slope Revetments (located within District Right of Way)	Design Review, Inspection and Maintenance	District

[5] Transportation will take the lead on the design review; however, the District may be requested to review specific drainage facilities. If the County requests the District to review a project, that review shall include all drainage facilities, including Transportation Storm Drains, access, and associated headwalls and wingwalls, unless otherwise agreed upon in writing.

2.6 Category F – Water Quality Management Facilities -

CATEGORY F – WATER QUALITY MANAGEMENT FACILITIES		
Facility	**Element of Responsibility**	**Responsible Agency**
Category F-1 Construction Activities Best Management Practices	Design Review, Inspection and Maintenance	Private Property Owner responsible for construction activity
Category F-2 Post-Construction Best Management Practices (catch basin filters, swales, etc., located within road right of way)	Design Review	Transportation
	Inspection and Maintenance	Transportation
Category F-3 Post-Construction Best Management Practices (Retention or Detention Basins, swales, pipes and conveyance facilities located outside road right of way)	Design Review	Transportation
	Inspection	Building and Safety/Transportation
	Maintenance	Private Property Owner or a County-Approved maintenance mechanism (Homeowners Association, CFD, CSA, etc.)

SECTION III – DRAFTING STANDARDS FOR DRAINAGE FACILITIES

3.1 Drafting Manual - The District developed a Drafting Manual and it is now available on the District's website at http://www.rcflood.org. A copy of the Drafting Manual is available to download from the District's website and/or it can be purchased directly from the District office. The District updates the manual as needed and all users are encouraged to use the latest version when working on projects requiring the District's review and approval.

SECTION IV - PLAN CHECK AND INSPECTION PROCEDURES FOR DRAINAGE FACILITIES

4.1 Plan Check Procedures - The District and Transportation (Agencies) provides plan checking and design review services for the different Drainage Facilities categories in accordance with Section II of this MOU as follows:

1. The Agencies require Developers to submit improvement plans for Drainage Facilities along with the Plan Check Deposit Based Fee Worksheet available on the District's website at http://rcflood.org. Search for Technical Resources and then select Publications and Records. A copy of the Plan Check Deposit Based Fee Worksheet is available to download. The District updates this worksheet as needed and all applicants working on projects requiring the District's review and approval must use the latest worksheet for their submittals.

2. Based on the information contained in the applicant's submittal, the District or Transportation will prepare and submit a bonding estimate detailing the estimated cost of the Drainage Facilities, which shall be the basis upon which Transportation will collect field inspection fees according to the provisions of Section 17.1, Security for Improvements of Riverside County Ordinance No. 460. If prepared by the District, a bonding estimate letter will be sent to Transportation.

3. Transportation will review the bonding estimate letter and the improvement plans to confirm the District findings with respect to construction inspection responsibility and the estimated cost. Any discrepancies will be submitted to the attention of District staff who prepared the bonding estimate to clarify any issues before recordation and/or bonding for the proposed drainage improvements. The District inspection responsibility will be limited to those items mutually agreed upon in Section II of this MOU.

4. District requires Developer to pay District, within thirty (30) days after receipt of periodic billings from District, any and all such amounts as are deemed reasonably necessary by District to cover District costs. These costs are associated with the plan check and design review of Drainage Improvement Plans, District Right of Way and conveyance documents review and approval, and with the processing and administration of preparing any agreements related to the Drainage Facilities.

5. District will provide Transportation with a reproducible copy of "Record Drawing" improvement plans upon District acceptance of Drainage Facilities in accordance with Section II of this MOU.

4.2 Inspection Procedures - The District provides inspection services for the different Drainage Facilities categories in accordance with Section II of this MOU as follows:

1. The District requires Developers to deposit inspection fees in an amount as determined and approved by the District at the time of providing written notice to District of the start of Drainage Facilities construction. Inspection fees are determined in accordance with County of Riverside Ordinance Nos. 671 and 749, including any amendments thereto, based upon the bonded value of the Drainage Facilities.

2. Construction of Drainage Facilities shall be normal business hours on a five (5) day, forty (40) hour workweek with no work on Saturday, Sundays or days designated by the Agencies as legal holidays, unless otherwise approved by the Agencies as appropriate. If the Developer feels it is necessary to work more than the normal forty (40) hour workweek or on weekends or holidays, the Developer shall make a written request for permission from the Agency to work the additional hours. The request shall be submitted at least 72 hours prior to the request date for additional work hours and state the reasons for the overtime and the specific time frames required. The decision granting permission for overtime work will be made by the Agency at their sole discretion and shall be final. If permission is granted, the Developer will be charged the cost incurred at the overtime rates for additional inspection time required in connection with the overtime work in accordance with County of Riverside Ordinance Nos. 671 and 749, including any amendments thereto.

SECTION V –
CAST-IN-PLACE CONCRETE PIPE FOR DRAINAGE FACILITIES

5.1 Standard Specification References - The following Construction Specifications for Cast-in-Place Concrete Pipe (CIPP) shall apply:

1. Standard Specifications of the State of California, Business, Transportation and Housing Agency, Department of Transportation, 2006 Edition (State Standard Specifications).

2. 2018 Standard Specifications for Public Works Construction or Latest Edition (Standard Specifications).

3. Specifications for Cast-In-Place Concrete Pipe, American Concrete Institute, Committee 346-09

5.2 Design Manual References - The following design references shall apply:

1. Los Angeles County Flood Control District Structural Design Manual.

2. Lynch Manual, Cast-in-Place Concrete Pipe Process - 1990 Edition.

5.3 Specific Requirements and Specifications - The following specific requirements and specifications shall apply and may be exceptions to those listed in the references. The term "Engineer" when used in these specifications shall mean the Director of Transportation when the project is being inspected by Transportation or the General Manager-Chief Engineer when the project is being inspected by the District, or their authorized representative.

1. CIPP shall only be used where shown on the drawings and approved by the agency responsible for the maintenance of the project.

2. A geotechnical investigation report shall be prepared and transmitted to the approving agency at the time the drawings are initially submitted for review. The report shall be prepared by a licensed civil or geotechnical engineer registered in the State of California, and shall address, but not necessarily be limited to the following issues:

   A. Trench wall stability
   A trench stability analysis shall be prepared. Sloughing and overall trench stability as it pertains to the construction of CIPP shall be addressed.

   B. E**xistence of groundwater**
   If groundwater is present, the report shall specify appropriate mitigation measures.

   C. Existence of expansive soils
   CIPP shall not be used if expansive soils are present.

   D. Corrosion potential
   A chemical analysis of the soil samples shall be made to determine sulfate concentrations. A recommendation with respect to cement "Type" shall be made.

   E. Overall feasibility of constructing CIPP

3. For structural design purposes, the pipe shall be designed flowing no more than just full unless structural calculations are submitted showing that the pipe can safely sustain the proposed hydrostatic head.

4. Design flow velocities greater than 20 ft./sec. will not be allowed unless an exception is granted by the Engineer.

5. A minimum 6 sack per cubic yard design mix shall be used and the compressive strength of the concrete (f_c) at 28 days shall be at least 4000 psi; the modulus of rupture shall be at least 550 psi. For velocities greater than 10 ft./ sec. but not greater than 20 ft./sec. the compressive strength shall be 5000 psi. Compressive strengths shall be noted on the drawings.

6. Pipe wall thickness for flows having velocities equal to or less than 10 ft./sec. shall comply with the requirements as set forth in the Standard Specifications.

For velocities greater than 10 ft./sec. but not more than 20 ft./sec. a 140-degree segment of invert shall be thickened 2 inches in wall thickness as "sacrificial concrete". Increases in standard wall thickness shall be noted on the drawings.

7. The minimum finished cover over the pipe shall be 3 feet.

8. The minimum pipe slope shall be 0.005.

9. CIPP, which is to be maintained by the Transportation or District, shall not be placed except in the presence of the Engineer.

10. When CIPP is specified as an alternative to reinforced concrete pipe, a note shall be added to the construction drawings stating that Transition Structure No. 3 shall replace Junction Structure No. 2 when CIPP is used. No changes need be made for Junction Structure No. 4.

11. CIPP shall not have curve radii less than shown here.

PIPE SIZE	RADIUS*
24 in.	45 ft.
36 in.	45 ft.
42 in.	45 ft.
48 in.	60 ft.
54 in.	60 ft.
60 in.	60 ft.
66 in.	60 ft.
72 in.	60 ft.
78 in.	90 ft.
84 in.	120 ft.
96 in.	150 ft.
120 in.	160 ft.

* These values may be reduced by 25% for curves with included angles of less than 25 degrees.

SECTION VI -
SPECIAL PROVISIONS AND DETAILED SPECIFICATIONS
FOR DRAINAGE FACILITIES

SPECIAL PROVISIONS
SECTION 6.1 - GENERAL

6.1.1 References - References made in these Special Provisions or Detailed Specifications to the "Standard Specifications" refer to the "Greenbook" Standard Specifications for Public Works Construction, current edition, including supplements. Specific section references within the Standard Specifications are based on the 2018 Greenbook version. Standard Specifications of the American Society for Testing and Materials shall be designated by ASTM and the appropriate number of the standard. Unless otherwise specified, wherever the words "State Standard Specifications" or "Caltrans Standards" are used in these Special Provisions or Detailed Specifications they shall mean the Standard Specifications of the State of California, Department of Transportation, current edition. Specific section references within the State Standard Specifications are based on the 2015 version. Whenever the words "District Standards" are used they shall mean the version of the "Standard Manual" published by the Riverside County Flood Control and Water Conservation District that is in effect as of the date of the signing of the project plans by the approving Agency.

In case of conflict between the drawings and the specifications, the drawings shall govern; in case of conflict between the referenced specifications and these specifications, the latter shall govern.

6.1.2 Engineer - Throughout these specifications, the term "Engineer" shall refer to the Director of Transportation in all cases where the Riverside County Flood Control and Water Conservation District (District) is not maintaining the facility, and shall refer to the General Manager-Chief Engineer of the District whenever the District is to maintain the facility. The term "Engineer" refers to the Director of Transportation or the General Manager-Chief Engineer of the District acting directly or through properly authorized agents, such agents acting within the scope of the particular duties entrusted to them.

SECTION 6.2 THROUGH SECTION 6.4 - NOT USED

SECTION 6.5 - PROJECT SITE MAINTENANCE

6.5.1 Through all phases of construction, the Contractor shall comply with the provisions of Section 7-8 of the Standard Specifications. The Contractor shall also comply with South Coast Air Quality Management District (SCAQMD) Rule 403 "Fugitive Dust", Rule 403.1 "Supplemental Fugitive Dust Control Requirements for Coachella Valley Sources", and requirements set forth by the California Regional Water Quality Control Board. The Contractor shall provide the Engineer a copy of the Stormwater Pollution Prevention Plan prior to construction. Before final acceptance of the work, the Contractor shall clean the work and the site of the work of all falsework, temporary structures, other construction materials and equipment, excess materials and rubbish, and shall leave the work and the site in a neat and presentable condition.

SECTION 6.6 - SPECIAL REQUIREMENTS

6.6.1 Record Drawings - Upon the completion of the project as determined by the Engineer, but prior to acceptance, the Owner/Developer shall provide redlined Record Drawings of the project to the appropriate agency maintaining the facility. After the redline Record Drawings have been approved by the Engineer, a time will be scheduled for the Owner's/Developer's representative to transfer the redlined information onto original mylars. At that time, the Owner's/Developer's Engineer, duly registered in the State of California, shall review and sign the mylars as "Record Drawings".

6.6.2 Construction Tolerances - Variation in alignment, grade and dimensions of the structures and structural components from the established alignment, grade and dimensions shown on the drawings shall be within the tolerances specified in the following:

Table A – Tolerances for Grading Unlined Channels, Levees and Access Roads		
Departure from established alignment		2 inches on tangents 4 inches on curves
Departure from established profile grade	Channel bottoms, channel sideslopes in cut and fill, levee and access road sideslopes in cut	Zero above and 3 inches below the specified grade
	Top surfaces of levees and access roads in both cut and fill, levee and access road sideslopes in fill	Zero below and 3 inches above the specified grade

Regardless of the construction tolerances specified, the excavation and grading shall be performed so that the finished surfaces are in uniform planes with no abrupt breaks in the surface.

Table B - Tolerances for Trapezoidal Concrete Lined Channels and Levees		
Departure from established alignment		2 inches on tangents 4 inches on curves
Departure from established profile grade		1 inch
Variation in thickness of lining sideslopes and invert		5 percent of specified thickness provided average thickness is maintained
Variation from specified width of section at any height		0.0025 times specified width W plus 1 inch. 0.0025W + 1 inch
Variation from specified height of lining		0.005 times specified height H plus 1 inch. 0.005H + 1 inch
Variation in surfaces (gradual)	Invert Sideslopes	¼ inch in 10 feet ½ inch in 10 feet
Variation in surfaces (abrupt)		¼ inch

Gradual Variation tolerance as measured by placing a 10-foot straight edge anywhere on the finished concrete structure within 72 hours after concrete placement. The gap at any point between the straight edge and the concrete shall not exceed the specified amount.

Table C - Tolerances for Formed, Cast-in-Place Concrete Structures		
Departure from established alignment		1 inch on tangents 2 inches on curves
Departure from established profile grade		1 inch
Inside dimensions		0.005 times specified dimension
Variation from the plumb or the specified batter in the lines and surfaces of walls, piers and in arises	Exposed, in 10 feet Backfilled, in 10 feet	½ inch 1 inch
Variation in cross-sectional dimensions		Minus ¼ inch plus ½ inch
Variation in surfaces (gradual)	Invert Soffits, Walls, Sideslopes	¼ inch in 10 feet ½ inch in 10 feet
Variation in surfaces (abrupt)		¼ inch

Table D - Tolerances for Reinforcing Steel Placement		
Variance from indicated position	Spacing between adjacent bars and the distance between layers of bars	1 bar diameter nor more than 1 inch
Concrete cover measured perpendicular to steel in the direction of tolerance		¼ inch

All variations from the approved plans exceeding the specified tolerances in the tables above shall be removed and replaced at no cost to the Agencies and at the direction of the Engineer.

The Fabrication for the Precast Reinforced Concrete Box (PRCB) shall conform to Section 216-3 of the Greenbook Specifications with the following exceptions:

Reinforcement placement shall conform to the details shown on the plans or standard plans except that the minimum cover of concrete over the reinforcement for the invert is two (2) inches.

6.6.3 Confined Space - The Contractor shall comply with all Cal/OSHA safety regulations including regulations concerning confined space and for maintaining a safe working environment for Contractor and District employees on the site. The Contractor shall develop and maintain a confined space procedure specific to this contract that complies with the requirements contained in California Code of Regulations, Title 8, Section 5158, Other Confined Space Operations. Projects that will be inspected by the District must additionally comply with the District's Confined Space Procedure, SOM-18. A copy of SOM-18 can be obtained from the District office, 1995 Market Street, Riverside upon request. The procedure shall be reviewed and approved by the Engineer prior to the issuance of a Notice to Proceed.

The procedure shall provide for recording of data to develop a history of acceptable atmosphere within the confined space. That history will include:

1. Calibration schedule of a direct reading confined space meter by trained personnel.

2. Daily monitoring and recording of the confined space atmosphere with a calibrated direct reading confined space meter.
3. Records of Items 1 and 2 shall be maintained onsite and copies given to the Engineer.
4. The records shall indicate if readings are of natural or mechanically enhanced ventilation.

The Contractor will be required to keep a direct reading confined space meter onsite for the duration of the contract. The meter shall be calibrated according to the schedule specified in the Contractor's confined space procedure and shall be made available for the Engineer's use upon request.

SECTION 6.7 THROUGH SECTION 6.9 - NOT USED

DETAILED SPECIFICATIONS

SECTION 6.10 THROUGH SECTION 6.13 - NOT USED

SECTION 6.14 - EARTHWORK

6.14.1 General Excavation Requirements - Pipe excavation shall be in conformance with Section 306 of the Standard Specifications. Channel excavation shall be in conformance with Section 300-7, and the structure excavation shall be in conformance with Section 300-3 of the Standard Specifications. Access to trenches shall be in conformance with Section 306-3.6 and the manner of bracing excavations shall be in conformance with Section 306-4 of the Standard Specifications.

Excavation shall be kept to the minimum widths required for efficient placing of the pipe or structure and the construction of the various other concrete structures. However, for pipe placement, the minimum width of trench shall be 24 inches greater than the outside diameter of the pipe. The maximum length of open trench shall be in conformance with Section 306-3.5 of the Standard Specifications.

In excavating for surfaces against which concrete is to be placed, care shall be exercised in removing the final lift. All surfaces against which concrete, fill, or backfill is to be placed shall be free of debris, mud or ponded water.

The foundation for all structures including pipe, box, manholes, junctions, levees and other embankments, concrete channels and side slopes will be inspected and tested after excavation. No structures, fill or backfill will be permitted until the foundation has been inspected and approved by the Engineer. Work completed without inspection of the foundation may, at the discretion of the Engineer, be required to be removed and replaced at no cost to the Agencies. The subgrade shall be compacted to ninety percent (90%) relative compaction prior to the placement of concrete, except (95%) relative compaction is required under the road structural section at a depth of 0.5-feet below the top of subgrade and 2.5 feet below the finish grade of the road. If subgrade compaction is deficient, subgrade shall be scarified, moisture conditioned to or slightly

above optimum moisture content, and the surface proof rolled to a minimum ninety percent (90%) relative compaction or (95%) relative compaction accordingly.

Material which will not provide a suitable foundation shall be removed and replaced with compacted select material as directed by the Engineer.

Any over-excavation shall be filled with select material compacted to ninety percent (90%) relative compaction or 95% relative compaction under the road structural section, at a depth of 0.5-feet below the top of subgrade and meeting the material requirements for backfill.

The Contractor shall remove slides and materials eroding into the work, and the slopes and grades refinished to original grades as specified.

The Contractor shall dispose of all surplus excavated material outside the limits of the construction easements and permanent rights of way.

6.14.2 General Fill and Backfill Requirements - Whenever fill is specified or required (except for pipe and box backfill) the work shall be performed as set forth in Sections 300-4.1 through 300-4.8 of the Standard Specifications. Backfill for pipe and box shall conform to Section 306-12 of the Standard Specifications except as modified herein.

No backfill materials shall be placed against the outside walls of cast-in-place concrete structures until the concrete has developed eighty percent (80%) of its design strength. No fill or traffic will be permitted on the top of any cast-in-place concrete structure, until the concrete in the structure has attained its design strength. Compressive strength will be determined by test cylinders taken by the Engineer as described in section 6.14.3 below.

Regardless of the method of densification, backfill material shall not be placed against any reinforced concrete structure until the structure has been inspected and approved for backfilling by the Engineer.

Densification of backfill will be accomplished by either mechanical compaction, by placement of Controlled Low Strength Material (CLSM), or by Slurry Cement Backfill as described in (1) (2) and (3) below. Jetting is not allowed.

(1) Mechanical Compaction - Backfill shall be mechanically compacted by means of tamping rollers, or other mechanical tampers. Impact-type pavement breakers (stompers), will not be permitted unless otherwise approved by the Engineer.

All backfill material for structures shall be placed in horizontal, uniform layers and shall be brought up uniformly on each side of the structure. The thickness of each layer of backfill shall not exceed 8 inches before compaction unless otherwise approved by the Engineer. For hand directed mechanical compactors, the thickness of each layer shall not exceed 4 inches before compaction.

All relative compaction tests will be made in conformance with ASTM D1557 and ASTM D6938, or if requested by the Agency, CT216 or CT231.

(2) Controlled Low Strength Material (CLSM) – Controlled Low Strength Material (CLSM) placement for backfill shall be used per District Standard M815 for Reinforced Concrete Pipe (RCP), certain Reinforced Concrete Box (RCB) conditions and when specified or approved by the Engineer. CLSM shall conform to Section 201-6 of the Standard Specifications and as specified in Section 6.16.

(3) Slurry Cement Backfill- Slurry cement backfill is typically a higher strength backfill with greater cement content than CLSM and shall conform to Section 19-3.02-MATERIALS of the State Standard Specifications.

Approval to use specific methods and compaction equipment shall not be construed as guaranteeing or implying that the use of such methods and equipment will not result in damage to adjacent ground, existing improvements, or improvements installed, nor shall it be construed as guaranteeing proper compaction. The Contractor shall make his own determination in this regard.

All backfill and bedding around structures and pipe shall be compacted to not less than ninety percent (90%) relative compaction. Where such material is placed under existing or proposed paved roadways, the top 3 feet, measured from the subgrade plane, shall be compacted to ninety-five percent (95%) relative compaction by Method (1) or CLSM per Method (2). Concrete Slurry (2000 psi) shall be required as backfill material above the pipe when the cover is two (2) feet or less, measured the top of the pipe to the existing ground surface. Concrete Slurry placement shall be in accordance to Section 6.16 of these specifications.

Trench bottoms for structures and pipe shall be graded to provide firm and uniform bearing throughout the entire length of the structures and pipe.

Pipe and box bedding shall consist of Filter Material per 6.14.4 below.

Backfill material shall consist of either select material from the excavation or imported material, as approved by the Engineer.

6.14.3 Testing - Compaction tests shall be performed as described below in conformance to either ASTM D1556 (sand cone) or ASTM D6938 (nuclear) test method. These tests represents the minimum required. Additional tests may be ordered at the Engineer's discretion.

1. Mainline Trenches - A complete series of compaction tests shall be taken for each 4-foot thickness of backfill placed. Each series shall consist of tests taken at approximate maximum intervals of 300 feet. Each series shall begin above the structure.
2. Connector Pipe Trenches - Compaction tests shall be taken on 50% of the laterals, one test for each 4 feet of depth.
3. Any failed test shall result in a retest.

When testing is provided by the Owner's/Developer's consultant, a complete testing report shall be given to the Engineer prior to placement of the street structural section or acceptance of the project, whichever occurs first.

6.14.4 Filter Material - This section covers all filter material to be placed below the reinforced concrete pipe, box and various other structures. The placing of filter material will be determined from field conditions as directed by the Engineer.

The materials for filter material shall meet the requirements for 3/4-inch Crushed Rock as per Section 200, Table 200-1.2.1 (A) of the Standard Specifications. The filter material shall be consolidated and the surface trimmed to final grade as directed by the Engineer.

6.14.5 Concrete Slurry - Concrete shall have a compressive strength of 2,000 psi and as specified in Section 6.16. Limits of the Concrete Slurry shall extend from the top of the pipe to a minimum of four (4) inches to a maximum of twelve (12) inches above the pipe.

SECTION 6.15 - TRENCH SAFETY SYSTEM

6.15.1 General Requirements - The Contractor shall furnish and implement a safety system as required by Section 306-3.1 and Section 306-4 of the Standard Specifications. Excavation for any trench five (5) feet or more in depth shall not begin until the Contractor has received a permit from the State of California Department of Industrial Relations, Division of Occupational Safety and Health (Cal-OSHA). A copy of the permit shall be kept onsite at all times.

SECTION 6.16 - CONCRETE CONSTRUCTION

6.16.1 General Requirements - Concrete for all purposes shall be composed of Portland Cement, aggregates, and water of the quantities and qualities herein specified, and in the required proportions. The ingredients are to be well mixed and brought to the proper consistency and have a compressive strength at the age of 28 days of not less than the amount shown in the following tabulation for each type of work listed:

TYPE OF WORK	MINIMUM POUNDS PER SQUARE INCH
Bridges, +Walls, +Boxes, +Rectangular Channel and +Transition Structure Nos. 1, 2, 3, and 4, +Junction Structure No. 5, Concrete Bulkhead and Cast-in-Place Concrete Pipe (CIPP)**	4000*
Slope Paving, Trapezoidal Channel, Catch Basins, Drop Inlets, +Junction Structure Nos. 1, 2, 3, 4, 6 and 7, +Manholes, Concrete Collars and Headwalls	3250*
Local Depressions, Cutoff Walls, Concrete Pads, Encasements, Curb and Gutter, Cross Gutters, Driveways, Sidewalk, Fence Posts Encasements and Miscellaneous Concrete not otherwise specified	3000*

Concrete Slurry	2000
Controlled Low Strength Material (CLSM) hand excavatable	50-100[++]

Slurry Cement Backfill (Section 19-3.02-MATERIALS of the State Standard Specifications)

*Note: Concrete for use in structures constructed from State of California, Department of Transportation Standard Plans shall have compressive strengths as called for on those plans.

**Note: See the appropriate section for specifications on Cast-in-Place Concrete Pipe. Engineer to adjust Concrete Strength Transition Structures to match Concrete Strength for CIPP mainline.

[+]Note: For velocities exceeding twenty feet-per-second (20 fps), concrete invert thickness shall be increased by one (1) inch on the inside face to provide additional concrete cover over the steel reinforcement and the compressive strength increased to 5000 psi. For velocities exceeding thirty feet-per-second (30 fps), the compressive strength shall be increased to 6000 psi. This includes structures and manholes.

[++]Note: For CLSM, a maximum of 1/2 sack of cement per C.Y of concrete is allowed. CLSM shall conform to Section 201-6 of the Standard Specifications

6.16.2 Material and Methods - All concrete materials, methods, forms and proportioning shall conform to Sections 51 and 90, and additionally, curb construction shall conform to Section 73 of the State Standard Specifications. The use of admixtures will be subject to approval by the Engineer. Concrete test specimens shall be made in accordance with ASTM Designations C-31 and C-172. Tests for concrete compressive strengths shall be performed in accordance with the requirements of ASTM Designation C-39. Combined aggregate grading for all concrete shall be in conformance with Section 90-1.02C(4)(d) of the State Standard Specifications and the following tabulation for each type of work listed:

TYPE OF WORK	COMBINED AGGREGATE GRADING
Bridge Footings and Inverts of Trapezoidal Channels, Spillways, Reinforced Concrete Boxes, Rectangular Channels, Junction Structures, Transition Structures, Manholes, and Cast-in-Place Concrete Pipe with diameters of 48" or greater.	1-1/2" Maximum
Bridges, Retaining Walls, Trapezoidal Channel Slope Paving, Box Deck and Walls, Rectangular Channel Walls, Headwalls, Catch Basins, Drop Inlets, Local Depressions, Curb and Gutter, Driveways, Sidewalk, Cutoff Walls, Bulkheads, Collars, Encasements and Cast-in-Place Concrete Pipe, with diameters of less than 48" and other Miscellaneous Concrete not otherwise specified.	1" Maximum

Supplementing Section 90 of the State Standard Specifications, prior to placement of any concrete the Contractor shall submit mix designs for all types of concrete to be placed, to the Engineer for approval. Supplementing Section 90 of the State Standard Specifications, concrete delivered to the job site shall be accompanied by a ticket containing the weight of each of the individual ingredients in the mix.

6.16.3 General Reinforcing Steel Requirements - Reinforcing steel for all reinforced structures shall be Grade 60 Billet-Steel. The reinforcing steel for use in structures constructed from State of California, Department of Transportation Standard Plans shall be of Grade as called for on those plans. Cleaning, bending, placing and spacing of reinforcement shall conform to the applicable provisions of Section 52 of the State Standard Specifications and to the drawings. The Contractor shall furnish a "Certificate of Compliance" with the Specification of ASTM Designation: A-706 or A-615. All splices shall conform to the State Standard Specifications and to the drawings.

6.16.4 Consistency - The consistency of the concrete shall be such as to allow it to be worked into place without segregation. Unless otherwise approved, the slump shall be 4 inches plus or minus 1 inch for all concrete, except the concrete for the Cast-in-Place Concrete Pipe shall have a slump of 2 inches plus or minus 1 inch.

Controlled Low Strength Material (CLSM) flow characteristics shall be determined by the manufacturer to meet job site conditions and shall be approved by the Engineer.

The slump test shall be performed in accordance with the requirements of ASTM Designation: C-143. Slumps greater than those specified may be cause for rejection of the concrete by the Engineer.

6.16.5 Placing - Supplementing Section 51-1.03D(1) of the State Standard Specifications, concrete shall not be placed except in the presence of the Engineer. The Contractor shall give reasonable notice to the Engineer each time he intends to place concrete. Such notice shall be far enough in advance to give the Engineer adequate time to inspect the subgrade, forms, steel reinforcement and other preparations for compliance with the specifications before concrete is delivered for placing. Heavy machinery, equipment and vehicles shall be kept off the steel reinforcement when stored or installed.

Formed concrete shall be placed in horizontal layers in lifts of not more than 20 inches. Hoppers and chutes, pipes and "elephant trunks" shall be used as necessary to prevent segregation of the concrete.

6.16.6 Form Removal and Finish - Forms shall be removed only when the Engineer has given his approval. Forms shall be removed in such a way as to prevent damage to the concrete. Supports shall be removed in a manner that will permit the concrete to take stresses due to its own weight uniformly.

Forms shall not be removed sooner than the following minimum time or strength after the concrete is placed. These times represent cumulative number of days and fractions of days, not necessarily consecutive, during which the temperature of the air adjacent to the concrete is above 50 degrees Fahrenheit. If the temperature falls below 50 degrees Fahrenheit at any time

after the concrete is placed in the forms, the Engineer will advise the Contractor of additional time required before forms can be removed.

Element	Strength or Time
Bridge deck slabs, loaded bridge abutments or retaining walls - supporting forms and shoring, and Reinforced Concrete Boxes with spans equal to or greater than 14 feet	3000 psi and 7 days
Reinforced Concrete Boxes at pavement grade	3000 psi and 7 days
Reinforced Concrete Boxes with spans less than 14 feet and not at pavement grade, Transition Structure Nos. 1, 2 and 4	1600 psi
Cast-in-Place Concrete Pipe	6 hours
All other structures	16 hours

The finish on all exposed formed surfaces shall conform to Section 51-1.03F(3) Class 1 Surface Finish of the State Standard Specifications. A tight wood float finish will be required on the surface of trapezoidal channels and bridge decks, and excessive surface working will not be permitted. The exposed concrete surfaces shall be broomed in a transverse direction with a fine textured hair push broom to produce a uniform surface and eliminate float marks. Brooming shall be done when the surface is sufficiently set to prevent deep scarring. If directed by the Engineer, a fine spray of water shall be applied to the surface immediately in advance of brooming.

Exposed corners of all concrete structures shall be finished with a 3/4" chamfer.

Concrete flatwork shall match adjacent surfaces. The concrete shall be struck off and tamped or vibrated until a layer of mortar has been brought to the surface. The top surface and face of curbs, gutters, catch basins and sidewalks shall be finished to match adjacent surfaces.

6.16.7 Curing - All concrete shall be prevented from drying for a curing period of at least seven (7) days after it is placed. Surfaces exposed to air during the curing process shall be kept continuously moist for the entire period or until curing compound is applied.

Formed surfaces shall be thoroughly wetted immediately after forms are removed and shall be kept wet until patching and repairs are completed. Water or covering shall be applied in such a way that the concrete surface is not eroded or otherwise damaged. Water for curing shall be clean and free from any substances that will cause discoloration of the concrete.

Concrete may be coated with curing compound in lieu of the continued application of moisture. The curing compound shall comply with the requirements of Section 90-1.03B(3) of the State Standard Specifications and ASTM Designation C-309. The curing compound shall be No. 2 White Pigmented Curing Compound, Type 2, Class B for all concrete surfaces other than for flatwork which shall be coated with No. 6 Nonpigmented Curing Compound, Type 1-D, Class A containing a red fugitive dye.

The curing compound shall be sprayed on the moist concrete surfaces as soon as free water has disappeared but shall not be applied to any surface until patching, repairs and finishing of that surface are completed. The curing compound shall be thoroughly mixed immediately before applying and shall be applied at a uniform rate of not less than one gallon per 150 square feet of surface.

6.16.8 Controlled Low Strength Material (CLSM) Curing - Controlled Low Strength Material (CLSM) must achieve a maximum indentation diameter of three (3) inches as determined under ASTM D6024 prior to backfilling or wherever it is placed within the travelled way or covered by paving.

6.16.9 Joints - Joints shall be made at the locations shown on the drawings, or as approved by the Engineer.

The Contractor shall construct, in one continuous concrete placing operation, all work comprised between such joints. Joints shall be kept moist until adjacent concrete is placed.

All construction joints having a keyed, stepped, or roughened surface shall be cleaned by sandblasting prior to placement of the adjacent concrete, unless otherwise directed by the Engineer.

The sandblasting operations shall be continued until all unsatisfactory concrete, laitance, coatings, stains, debris, and other foreign materials are removed. The surface of the concrete shall be washed thoroughly to remove all loose material.

Transverse weakened plane joints shall be required in the trapezoidal channel at 10-foot spacing or as directed by the Engineer. The joints may be formed by placing a continuous strip of plastic or other material that will not react adversely with the chemical constituents of the concrete or bond with the concrete. The strip shall have a minimum thickness of 0.013 foot; a width of not less than 0.12 foot nor more than 0.13 foot for the six-inch thick channel slope and invert. After placement, the vertical axis of the joint material shall be within 10 degrees of a plane normal to the surface of the concrete. The tops of the strip shall not be above nor more than 0.02 foot below the finished concrete. Final alignment of the strip for the transverse weakened plane joints shall not vary more than 0.04 foot from the edge of a 12-foot straight edge. After installation of a joint material the concrete shall be free of segregation, rock pockets or voids, and the finished concrete surface on each side of the joint shall be in the same plane.

The Contractor may elect to form the weakened plane joints in the channel surface by cutting a groove in the surface with a power-driven saw. The grooves shall be cut to a minimum depth of 0.17 foot and the width shall be the minimum width possible with the type of saw being used, but in no case shall the width exceed 0.02 foot. The weakened plane joints shall be sawed within 12 hours after the concrete has been placed.

Construction joints, when required, shall be located between the transverse joints and, unless otherwise specified on the plans, shall utilize 1/2-inch diameter deformed bars 30 inches long, spaced at 18-inch centers as tie bars. The construction joints shall be straight and finished in a workmanlike manner.

Surfaces of construction joints shall be cleaned as set forth in Section 51-1.03D(4) of the State Standard Specifications.

For reinforced concrete boxes, keyed transverse construction joints shall be placed not more than 50 feet or be less than 10 feet. A complete curtain of transverse steel shall be placed 3 inches from the face of the joints and longitudinal steel will not be continuous through the joints. Transverse joints in the invert, walls and deck shall be in the same plane. Transverse construction joints shall be constructed per details on the Standard Drawings.

For rectangular channels, keyed transverse construction joints shall not exceed 50 feet or be less than 10 feet. Transverse joints in the invert, walls and deck shall be in the same plane. Transverse construction joints shall be constructed per details on the Standard Drawings.

6.16.10 Weepholes - Weepholes shall be constructed in accordance with the drawings and at locations directed by the Engineer. All weepholes shall be 2-1/2 inches in diameter unless noted otherwise on the drawings.

Weepholes may be formed by removable round wooden dowels, Schedule 40 PVC Pipe or greater, or other methods acceptable to the Engineer.

All weepholes shall have a rodent screen consisting of 1/4 or 1/2-inch mesh, 16-gage galvanized hardware cloth securely and permanently attached over the drain opening in a manner approved by the Engineer.

Filter material for the weepholes shall be one inch (1") nominal size crushed rock conforming to the gradation of Section 200-1.2 of the Standard Specifications. Filter material shall also meet the quality requirements of Sections 200-1.1 and 200-1.2 of the Standard Specifications.

Filter material shall be wrapped in a single layer of Filter Fabric as shown on the drawings or approved by the Engineer. Filter Fabric shall conform to that specified for underdrains per Section 88-1.02B of the State Standard Specifications.

Filter Fabric shall be furnished in protective wrapping which shall protect the fabric from ultraviolet radiation and from abrasion due to shipping and handling. The fabric shall also be ultraviolet stabilized.

The fabric shall be placed in the manner and at the locations shown on the drawings. The surface to receive the fabric shall be prepared to a smooth condition free of obstructions and debris.

The fabric shall be covered within 72 hours of its placement. Should the fabric be damaged during construction, the torn or punctured section shall be repaired or replaced as directed by the Engineer.

6.16.11 Use of the Structural Concrete Slabs - Structural concrete slabs shall be defined as, but not limited to: channel inverts, access roads, ramps, and spillways. Dump trucks, concrete trucks

and earth-moving equipment (whether full or empty) will not be allowed to operate on the surface of the Structural Concrete.

A small crane with capacity not to exceed 10 tons will be permitted to operate on the concrete channel invert for the purpose of setting and moving forms and erecting the steel reinforcement for the walls. Wheel loading types and amounts will be subject to the approval of the Engineer. Vehicles of 3/4-ton capacity (or less) will also be permitted access to the invert. The speed of any vehicle using the invert will be limited to 10 M.P.H. maximum to avoid impact loading.

No other category of equipment, except that specifically approved by the Engineer in writing, will be permitted to use the invert of the channel for access to the work area.

In any event, vehicular access to the invert will not be permitted until the concrete has achieved its design strength. Approval for access to use the invert shall not relieve the Contractor of the responsibility to avoid damage to the concrete. Cracking, displacement or other damage, which occurs to the invert, will be cause to restrict some or all of the categories of equipment allowed access to the channel. Repair or replacement of damaged concrete will be required.

6.16.12 Reinforced Concrete Box - This section covers the construction of reinforced concrete boxes.

Reinforced concrete box walls shall be constructed by placing the concrete directly against timber or steel sheeting used as the outside form and shoring. Sheeting shall be closely fitted and extend a minimum of 12 inches above the ground surface. Unless otherwise directed, all sheeting shall be removed and the void created shall be immediately backfilled as specified in Section 6.14 - Earthwork.

6.16.13 Manholes - Manhole rings are required and shall conform to ASTM Designation: C-478, and the drawings. The manhole and rings shall be accurately aligned and laid up, using Type II Modified cement with a 1:2 mix mortar and with 1/2-inch minimum thickness pointed joints. On completion, vertical wall section shall not be out of plumb by more than 1/2-inch in 10 feet of vertical height. The cast iron manhole frame and cover shall be installed to an elevation according to the finished grade. All manhole frame and covers on unpaved surfaces shall be enclosed with a 6 feet by 6 feet, concrete pad, 6 inches thick and reinforced with six (6) #4 bars equally spaced, each way.

6.16.14 Use of Bridge or Box Deck Slabs - Loading and vehicular use of bridge and box deck slabs shall comply with the requirements of Section 51-1.03B of the State Standards Specifications. The Contractor is required to submit for review and approval a crossing plan for locations where construction loads are to be applied over the box. The crossing plan shall include, at minimum, the stations for the beginning and end of the crossing, type of construction equipment to be used at the crossing, the proposed strutting details and the materials to be used. The crossing plan shall conform to State Standard Plan D88 – Construction Loads on Culverts. The Contractor assumes full responsibility for repairing any damage to the box, including removal and replacement of the damaged section as directed by the Engineer.

SECTION 6.17 - CONCRETE PIPE

6.17.1 Description - This section covers Reinforced Concrete Pipe; Pipe on Curves; and Cast-in-Place Concrete Pipe of the various sizes, as required for the work; and Video Inspection.

6.17.2 Reinforced Concrete Pipe - Pipe materials, manufacture and quality, shall conform to ASTM Designation: C-76 or C-655. The Engineer shall be furnished a "Certificate of Compliance" signed by the manufacturer of the pipe certifying that the pipe conforms to the ASTM requirements. All pipe and pipe material supplied by the Contractor shall be new.

The District will also require the Three-Edge Bearing Test Method, or D-load bearing strength test, conforming to ASTM C497 for new pipe 48" or greater, with the basis for pipe acceptance in conformance with Sections 207-2.9.1(a) and 207-2.9.2 of the Standard Specifications. The test shall be performed in the presence of the Engineer.

Pipe shall be laid in a trench free of ponded water in and shall be in conformance with Section 306-7.3 of the Standard Specifications.

Pipe ends shall be cleaned and moistened prior to making up joint.

The concrete cover on the inside of all reinforced concrete pipe must be increased to provide a minimum of 1-1/2" over the reinforcing steel when the design velocities exceed 20 feet per second. The concrete design strength in these reaches shall be f'_c = 5,000 psi for velocities exceeding 20 feet per second and f'_c = 6,000 psi for velocities exceeding 30 feet per second.

6.17.3 Pipe on Curves - Unsymmetrical closure of pipe joints shall not exceed one inch (1") pull on the outside of the curve when pull is measured at the springline on the inside of the pipe. Beveled pipe may be necessary to meet this requirement. Mortar joints on curves shall conform in strength, texture of mortar finish, and tightness to the joints for straight ended pipe.

Gap Spacing	**Concrete Required**	**Required Structure**
Gap $\leq$ 1-inch	Class "C" Mortar	Full Wall Thickness
1-inch < Gap < 3-inches	Class 520-C-2500	Minimum Depth of 6-inches Minimum Width of 15-inches
3-inches $\leq$ Gap < 6-inches	See Section 6.16	Concrete Collar
6-inches $\leq$ Gap	See Section 6.16	Transition Structure

When beveled pipe is used the maximum deflection angle shall not exceed six degrees (6°) unless otherwise shown by the plans or approved by the Engineer.

6.17.4 Cast-in-Place Concrete Pipe (CIPP) - The Contractor shall be permitted to use Cast-in-Place Concrete Pipe only where shown on the drawings, or only where finished cover is three feet (3') or greater and the agency maintaining the facility approves the use of Cast-in-Place Concrete Pipe in lieu of Reinforced Concrete Pipe. The pipe shall only be placed in the presence of the appropriate agency inspector.

Cast-in-Place Concrete Pipe shall conform to Section 306-9 of the Standard Specifications except as modified as follows:

1. In lieu of the requirements of Section 306-9.2 the Contractor shall comply with Section 6.16 of these specifications. Compressive strengths shown on the drawings shall supersede that of Section 6.16.1 of these specifications.

2. Pipe wall thickness shown on the drawings shall supersede those of Section 306-9.8.3.

3. Holes drilled to verify wall thickness as specified in Section 306-9.7.2 shall be at 200-foot intervals.

4. Load bearing tests per Section 306-9.7.4 shall only be required as directed by the Engineer.

5. In lieu of the requirements of Section 306-12.5 the Contractor shall comply with Section 6.14.2 of these specifications. No backfill shall be permitted until the concrete has developed the full strength specified. If the compressive strength has been increased due to abrasive flow as noted on the drawings, backfill may be placed when the concrete has developed eighty percent (80%) of its design strength or 3,250 psi, whichever is greater. Test cylinders taken by the Engineer will determine compressive strength.

6. Criteria for circumferential crack repair defined in Section 306-9.6 shall be amended as follows: Circumferential cracks 0.01 inch or less in width shall be left as is. Cracks greater than 0.01 inch and less than 0.05 inch shall be cleaned and filled with cement paste. Cracks 0.05 inch and greater shall have concrete removed to a depth of 0.75 inch and width of 0.50 inch after which they shall be cleaned and filled with an elastomeric sealant.

7. Criteria for longitudinal crack repair defined in Section 306-9.6 shall be amended as follows: Longitudinal cracks with a width of more than 0.01 inch and less than 0.0005 multiplied by the outside diameter shall be cleaned and filled with cement paste. Cracks having differential displacement greater than 0.08 inch or width greater than 0.0005 multiplied by the outside diameter shall be repaired by full epoxy pressure grouting.

8. Criteria for rejection based on longitudinal cracking per Section 306-9.9 shall be replaced as follows: If longitudinal cracks exceeding 0.0015 multiplied by the outside diameter occur intermittently in 25 percent or more of a reach of pipe, the pipe shall not be repaired and shall be removed and replaced.

9. Crack width shall be determined by penetration to more than 0.25 inch of a standard machinist leaf gauge as defined in AASHTO D 280.

The placement of soil on Cast-in-Place Concrete Pipe for the purpose of shading will not be permitted.

6.17.5 Video Inspection - All concrete pipe (cast-in-place and reinforced) with inside diameters of 60 inch or less shall be televised prior to final inspection. Copies of the video recordings shall be given to the appropriate Agency. For pipe placed within roadway areas, video inspection shall be performed and the results approved by the Engineer prior to paving.

SECTION 6.18 - AIR-PLACED CONCRETE

6.18.1 Air-Placed Concrete - Air-placed concrete may be used for construction of channel transition walls only when specifically allowed elsewhere in these Detailed Specifications or on the drawings. One inch of concrete shall be added to the channel transition walls to obtain three inches of clear cover for steel reinforcement on the dirt side.

Air-placed concrete shall be installed only by subcontractors with a minimum of five (5) years experience specializing in construction of reinforced concrete structures by air-placed methods. Only personnel skilled in the techniques of air placement of concrete shall be utilized for air-placed concrete construction, and nozzle operators shall have a minimum of three (3) years experience in air placement of concrete in reinforced concrete structures.

Air-placed concrete shall be applied only by Method B (shotcrete) in conformance with Section 303-2.1.3 of the Standard Specifications.

Equipment used for air placement of concrete shall be in conformance with Section 303-2.2 of the Standard Specifications for "Method B", except that only "positive displacement piston" type pumps shall be allowed to convey the premixed concrete. So-called "rotating roller squeeze" pumps or "ball valve" pumps will not be allowed. In addition, two air compressors shall be provided. The air compressors shall have a minimum capacity of 250 cubic feet per minute for each operating nozzle.

Concrete for air-placed concrete shall conform to the material, proportioning and mixing requirements of these Detailed Specifications, except that materials shall conform to specifications applicable to the "wet-mix process" in Section 53-1.02 of the State Standard Specifications. The use of 3/8" pea gravel described therein will be required. The use of admixtures will be subject to the approval of the Engineer.

Strength of air-placed concrete shall be determined from cores taken from test panels in accordance with Section 303-2.4 of the Standard Specifications. The test panels shall have the same thickness as the maximum wall thickness of the transition section being constructed. A minimum of three cores shall be taken for each 250 cubic yards or fraction thereof of air-placed concrete deposited each day. One core test specimen shall be obtained and tested at 14 days, and the remaining two obtained and tested at 28 days. The tests shall be conducted in the presence of the Engineer and by a qualified laboratory acceptable to the Engineer. All coring and testing required shall be at the Contractor's expense. The minimum compressive strength of air-placed concrete shall be in accordance with the requirements of these Special Provisions. A final report documenting all testing shall be given to the Engineer prior to acceptance of the project.

Preparation of surfaces to receive air-placed concrete shall be in accordance with Section 303-2.5 of the Standard Specifications.

Forms and ground wires shall be in conformance with Section 303-2.7 of the Standard Specifications.

Placement of air-placed concrete shall be in accordance with Section 303-2.6 of the Standard Specifications and these Detailed Specifications. Prior to placing any concrete, sufficient scaffolding or other means of access shall be provided to allow adequate access to the work area for proper placement and finishing of the air-placed concrete. Scaffolding shall not be supported by the reinforcing steel or forms. After placement of concrete has started, workmen shall not walk on reinforcing steel or graded slopes. No concrete shall be placed until all scaffolding, forms, reinforcement, ground wires and joints have been inspected and approved by the Engineer. Air-placed concrete shall be applied only in the presence of the Engineer. Whenever possible, except when enclosing reinforcing steel, the nozzle shall be held at right angles to the air-placed concrete surface at a distance of 2-1/2 to 3-1/2 feet. When enclosing steel, the nozzle shall be held at an angle so as to direct the material around the bars. A nozzleman's helper equipped with an air jet shall attend the nozzleman and blow out all rebound, sand, etc., which may have lodged on the forms, steel or air-placed concrete. Concrete material shall emerge from the nozzle in a steady, uninterrupted flow. When flow becomes intermittent for any cause, the nozzle shall be diverted from the work until the flow again becomes constant. In shooting walls or slopes, application shall begin at the bottom and shall completely embed the reinforcement for the full thickness of the structural section less an allowance of one inch for the finish coat. The limit of lift height (when the inplace material begins to sag) shall not be exceeded. Immediately after the lift has been allowed to take its initial set, all surfaces shall be cleaned of rebound and other loose material by rodding or brooming.

Construction joints shall be in conformance with Section 303-2.8 of the Standard Specifications and these Detailed Specifications. Before applying air-placed concrete, construction joints and adjacent steel and forms shall be cleaned by sand, air and water blast of all laitance, overspray and rebound materials, and the surface of the joint thoroughly wetted.

Finishing shall be in accordance with Section 303-2.9 of the Standard Specifications and these Detailed Specifications. The finished surface on exposed portions of transition walls with sideslopes steeper than 1:1 (run to rise) shall have a Class 1 surface finish in conformance with Section 51-1.18B of the State Standard Specifications. Remaining portions of the transition shall have a broomed finish to match the adjacent trapezoidal channel surface. Prior to placing the finish coat, all laitance shall be removed from the existing surface, and the surface thoroughly cleaned and wetted by air and water blast. The finished coat shall be applied no more than eight (8) hours after the placement of the structural section, and the surface of the structural section shall be kept continuously moist until the finished coat is placed.

Curing of air-placed concrete shall be in accordance with the requirements of Section 6.16.7 of these Detailed Specifications.

SECTION 6.19 - NOT USED

SECTION 6.20 - FENCES AND GATES

6.20.1 Chain Link Fence - All materials shall be new except that specified for removal and relocation and shall conform to Section 206-6 of the Standard Specifications and the drawings, with installation in conformance with Section 304-3.2. Materials salvaged shall be subject to the Engineer's approval prior to reinstallation. All posts shall be set in commercial plant quality, Class B concrete.

6.20.2 Double Drive Gates - Gates shall be installed complete with all gateposts set in concrete and in conformance with Section 304-3.3 of the Standard Specifications.

6.20.3 Fencing on Boxes and Bridges - Fencing on boxes and bridges adjacent to pedestrian walkways shall conform to Standard B11-7 of the State of California Standard Plans for the Construction of Local Streets and Roads, latest edition.

SECTION 6.21 - MISCELLANEOUS

6.21.1 Description - This section covers the contract items Miscellaneous Iron and Steel; Corrugated Metal Pipe; Subdrain; and Filter Blanket.

6.21.2 Miscellaneous Iron and Steel - This section covers all ferrous metal used in the various hydraulic structures. Materials, parts and fittings shall conform to the following:

(a) Manhole Frames and Covers - Per ASTM Designation: A-48, Class 30. Manhole frames and covers shall be minimum weight as shown on the plans, and the weight of each frame and cover shall be indicated thereon in white paint. The Engineer shall approve style and markings. The castings shall be free from cracks, blowholes or other imperfections, straight, true to pattern and have a uniform finish. The castings for manholes in streets shall be thoroughly cleaned and coated with asphaltum paint of approved composition; all other castings for frames and covers shall be cleaned and galvanized. The cover shall fit firmly into the frame without rocking, with the frame accurately placed so that cover is flush with finish paving.

(b) All other Miscellaneous Metal - Per ASTM Designation: A-36.

(c) Except for manhole frames and covers described above, all exposed ferrous metal shall be galvanized per Section 210.3 of the Standard Specifications.

6.21.3 Corrugated Metal Pipe - Pipe materials and dimensions shall conform to AASHTO Designation: M-36. The Engineer shall be furnished a "Certificate of Compliance" signed by the manufacturer stating that pipe conforms to the designated specifications.

Separate sections of corrugated metal pipe shall be laid in the trench with outside laps of circumferential joints facing up grade. Pipe shall have full bearing, and variation from slope between the sections after assembly shall not exceed 1/2 inch.

Steel thicknesses noted on the plans are after galvanizing. Galvanizing shall conform to Section 75-1.05 of the State Standard Specifications.

6.21.4 Subdrain - Subdrain covers trenching and the furnishing of the subdrain pipe, all fittings, galvanized screen, filter material and Filter Fabric.

The filter material shall be wrapped in Filter Fabric as shown on the drawings. Filter material and Filter Fabric shall conform to the material specifications as stated in Section 6.16.10, Weepholes, of these Detailed Specifications.

Filter Fabric shall be furnished in a protective wrapping which shall protect the fabric from ultraviolet radiation and from abrasion due to shipping and handling. The fabric shall also be ultraviolet stabilized.

The fabric shall be placed in the manner and at the locations shown on the drawings. The surface to receive the fabric shall be prepared to a smooth condition free of obstructions and debris.

The fabric shall be covered within 72 hours of its placement. Should the fabric be damaged during construction, the torn or punctured section shall be repaired by placing a piece of fabric that is large enough to cover the damaged area and to meet the overlap requirement. Adjacent borders of the fabric shall be overlapped a minimum of twelve (12) inches or sewn. Upstream sections of fabric shall overlap downstream sections.

Perforated subdrain pipe shall be vitrified clay pipe, concrete pipe, ABS Pipe, or PVC pipe, at the option of the Contractor. Vitrified Clay pipe shall meet the requirements of ASTM Designation: C-700, for extra strength pipe. Concrete Pipe shall meet the requirements of ASTM Designation: C-14 Class 3 and C-444 Type I. ABS pipe shall meet the requirements of ASTM Designation: D-2751, SDR 23.5, and the perforations shall be that as described in ASTM Designation: C-700. PVC pipe shall meet the requirements of ASTM Designation: D2665 and perforations shall be that as described in ASTM Designation: C-700.

SECTION 6.22 THROUGH SECTION 6.25 - NOT USED

SECTION 6.26 - STONEWORK

6.26.1 Description - This section covers Rock Slope Protection of various classes; Concreted Rock; and Rock Protection Fabric.

6.26.2 General - All rock materials shall meet the quality requirements of Section 72-2.02 of the State Standard Specifications.

Rock materials shall be blocky and predominantly angular in shape. Not more than 25% of the rock shall have a length more than 2.5 times the breadth or thickness. No rock shall

have a length exceeding 3.0 times its breadth or thickness. All over-size rocks, as determined by the Engineer, shall be removed.

Rock materials shall be placed on a firm dry foundation in conformance with Method B of Section 72-2.03 of the State Standard Specifications, however, additional placement effort shall be required to meet the lines and grades as shown on the drawings and to fill and chink oversize voids with selected rock to establish a stable interlock. Chinking of voids will not be required for rock specified to be concreted.

Concrete for concreted (grouted) rock shall be Class "B" and shall have a slump sufficient to allow gravity flow into the interstices of the rock with rodding and vibration. Concrete for concreted rock shall be placed in accordance with Section 72-5.03 of the State Standard Specifications except that total penetration of the rock blanket by the concrete will be required, and the outer rocks of the finished rock surface shall project approximately 9 to 12 inches from the concrete surface.

6.26.3 Rock Protection Fabric - Rock Protection Fabric placed beneath rock shall conform to Type "B" per Section 88-1.02B of the State Standard Specifications with the exception that the weight in ounces per square yard shall be a minimum of 10. A six-inch minimum layer of backing material shall be placed over the fabric prior to placing rock unless otherwise shown on the plans.

SECTION 6.27 THROUGH SECTION 6.29 - NOT USED

SECTION VII – MAINTENANCE ACCEPTANCE FOR DRAINAGE FACILITIES

The following procedures shall apply to all drainage facilities constructed and inspected under the provisions of Ordinance No. 460 and shall also apply in those situations where, under special circumstances, the District has entered into a construction inspection agreement.

7.1 Notification of Maintenance Acceptance - District shall notify Transportation in writing as to the satisfactory completion of the flood control facilities to which the District has agreed to provide construction inspection and maintenance.

7.2 Release of Bonds -

1. Transportation shall not release any portion of the performance or material and labor bonds on any flood control facility to which the District has agreed to provide construction inspection and maintenance without prior approval of District in the form of completion notice.

2. Transportation shall immediately notify District in writing when bonds are released on all facilities where the District is to assume maintenance responsibility; whereupon the District shall assume said responsibility.

3. Transportation shall notify District 30 days prior to the expiration of the one-year guarantee and warranty period. Transportation shall release the final 5% of the

performance bond at the end of the one-year period unless otherwise instructed in writing by District.

7.3 Record Drawings - Transportation and District will each be responsible for preparation and filing of their respective Record Drawings. Upon completion and signature of "Record Drawings" by District, if catch basins, connector pipes or inlets are shown thereon which have been inspected by Transportation, the originals shall be delivered to Transportation for preparation and signature of "Record Drawings" with respect to these items, and returned to the District for filing.

7.4 Unmaintained Projects – In the event that Transportation discovers a completed facility that should be maintained by the District and is not accepted by the District for maintenance, Transportation will notify the District and furnish any documentation that is available for the acceptance of these completed facilities for maintenance. Agencies shall mutually agree on the responsible maintenance entity for these facilities.

APPENDIX K

FRONTIER COMMUNICATION RELOCATION OF FACILITIES PLANS

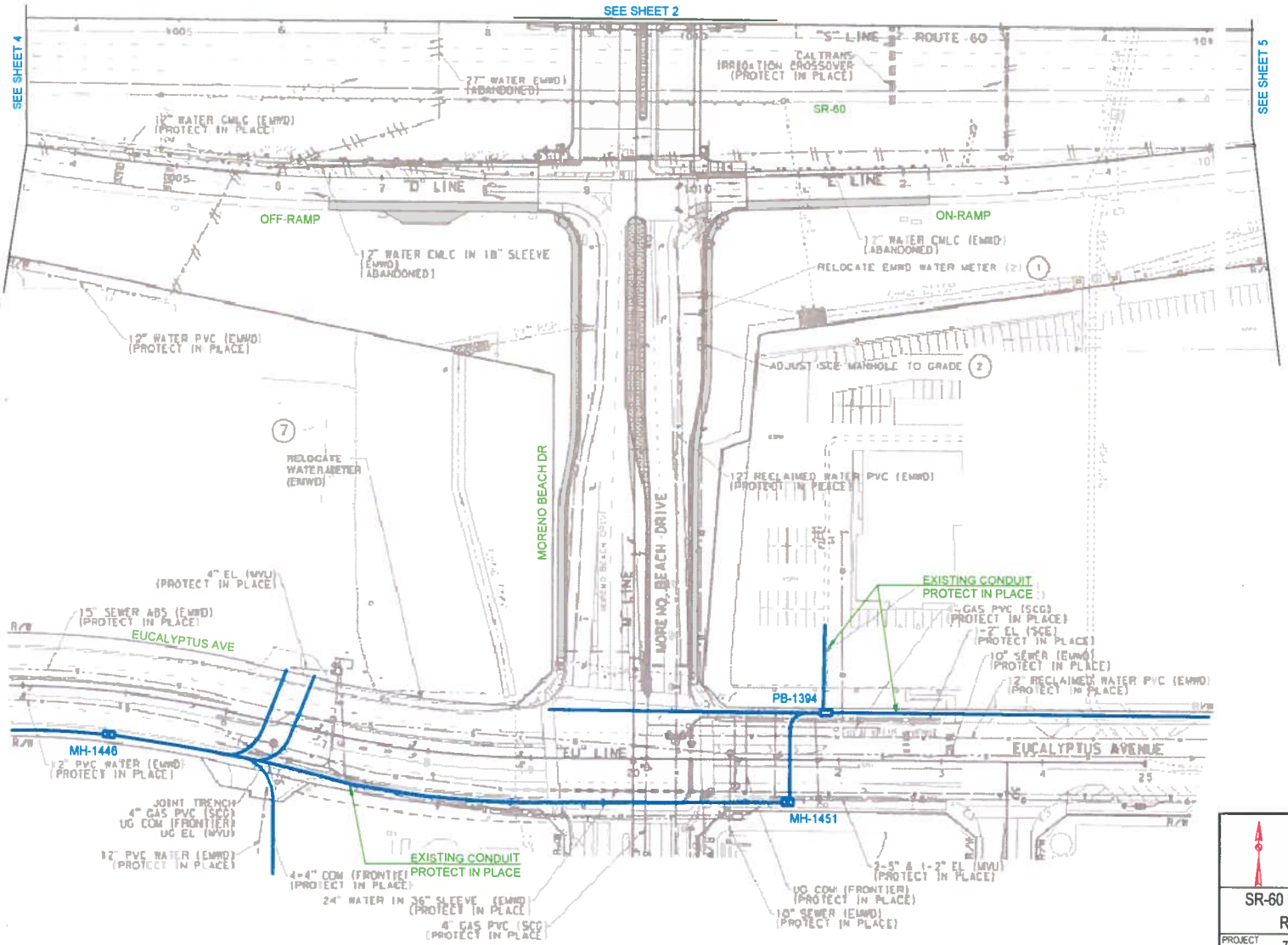

Frontier COMMUNICATIONS

SR-60 MORENO BEACH INTERCHANGE
RELOCATION OF FACILITIES

PROJECT NUMBER: 70143-5248686		C.O. AREA: SUNNYMEAD	
		EXCH. CODE: SUNNYMEAD	
DRAWN DATE: 01/06/2020	ENGR: DANIELLE SAMANIEGO	CNTY: SAN BERNARDINO	
	PHONE: 909-743-6575	FILE: 70143-5248686.DWG	
SCALE: 1:100	TAX DISTRICT: ---	DWG: 1 OF 8	
TWNSHP: ---	RNG: ---	SEC: ---	

1

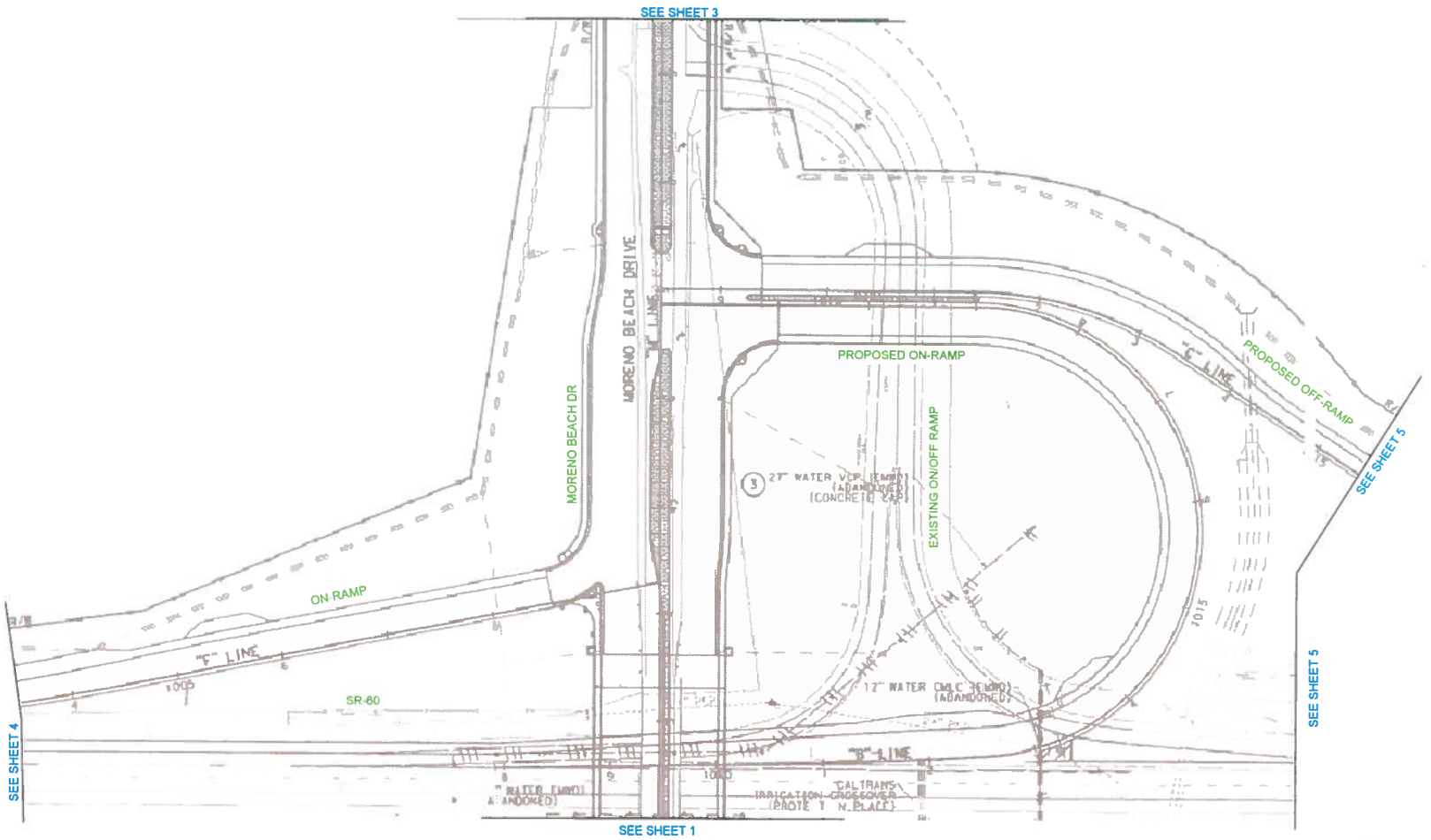

Frontier COMMUNICATIONS

SR-60 MORENO BEACH INTERCHANGE
RELOCATION OF FACILITIES

PROJECT NUMBER:	70143-5248686	C.O. AREA:	SUNNYMEAD
		EXCH. CODE:	SUNNYMEAD
DRAWN DATE: 01/06/2020	ENGR: DANIELLE SAMANIEGO	CNTY:	SAN BERNARDINO
SCALE: 1:100	PHONE: 909-748-6676	FILE:	70143-5248686.DWG
TWNSHP: —	TAX DISTRICT: —	DWG:	2 OF 8
	RNG: —	SEC:	—

2

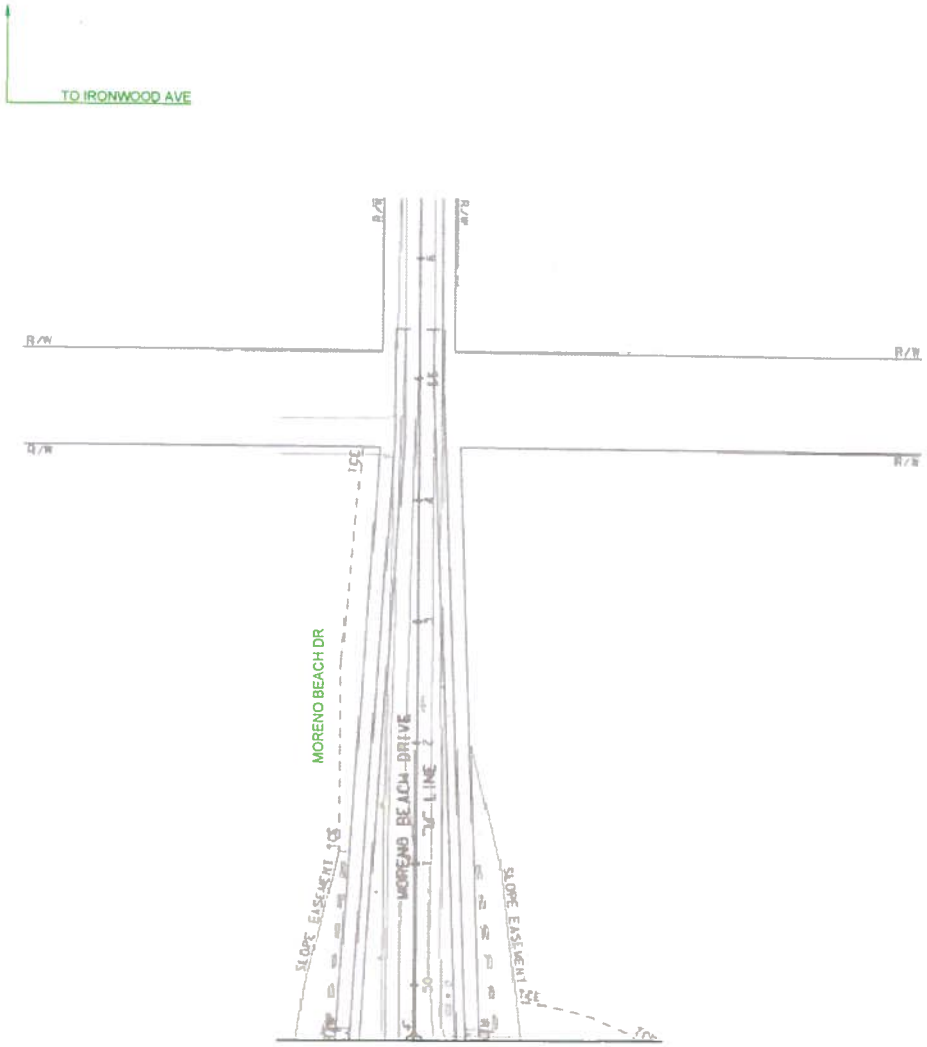

NO FRONTIER FACILITIES ON THIS PRINT

Frontier COMMUNICATIONS

SR-60 MORENO BEACH INTERCHANGE
RELOCATION OF FACILITIES

PROJECT NUMBER: 70143-5248686		C.O. AREA: SUNNYMEAD	
		EXCH. CODE: SUNNYMEAD	
DRAWN DATE: 01/06/2020	ENGR: DANIELLE SAMANIEGO	CNTY: SAN BERNARDINO	
	PHONE: 909-748-6575	FILE: 70143-5248686.DWG	
SCALE: 1:100	TAX DISTRICT: —	DWG 3 OF 8	
TWNSHP: —	RNG: —	SEC: —	

3

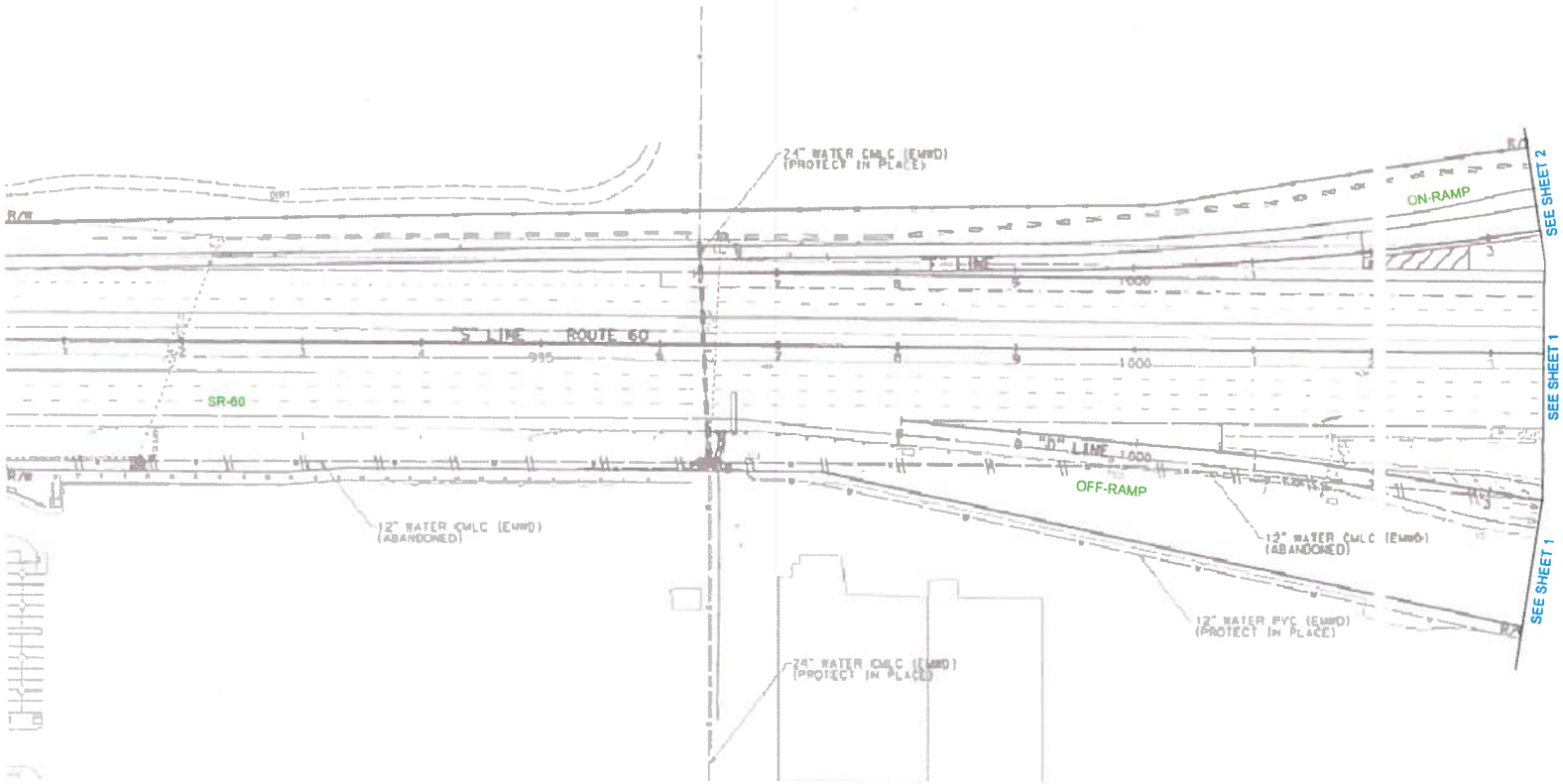

NO FRONTIER FACILITIES ON THIS PRINT

Frontier COMMUNICATIONS

SR-60 MORENO BEACH INTERCHANGE
RELOCATION OF FACILITIES

PROJECT NUMBER: 70143-5248686		C.O. AREA: SUNNYMEAD	
		EXCH. CODE: SUNNYMEAD	
DRAWN DATE: 01/06/2020	ENGR: DANIELLE SAMANIEGO	CNTY: SAN BERNARDINO	
	PHONE: 909-748-6676	FILE: 70143-5248686.DWG	
SCALE: 1:100	TAX DISTRICT: —	DWG 4 OF 11	
TWNSHP: —	RNG: —	SEC: —	

4

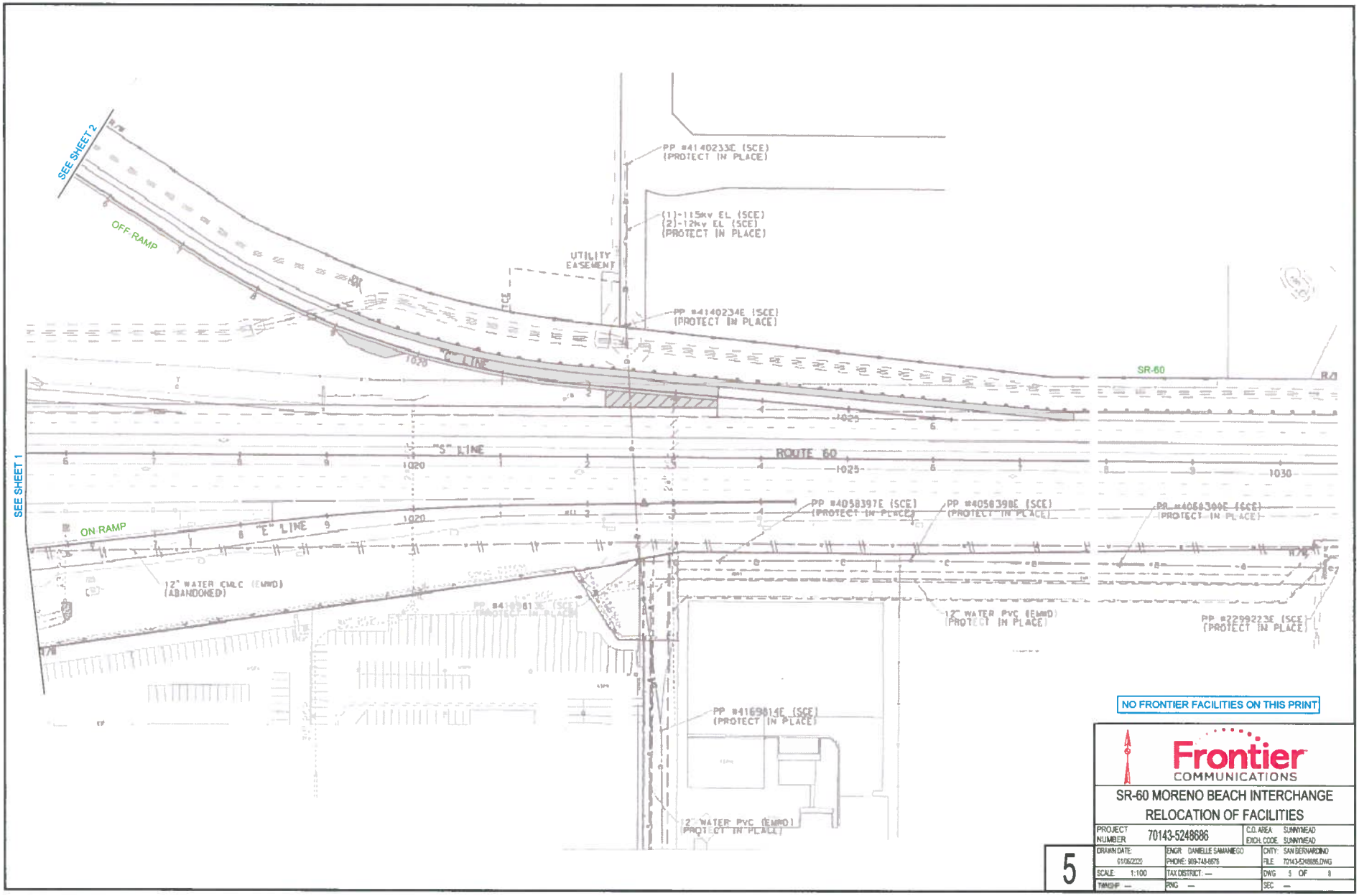

NO FRONTIER FACILITIES ON THIS PRINT

Frontier COMMUNICATIONS

SR-60 MORENO BEACH INTERCHANGE
RELOCATION OF FACILITIES

PROJECT NUMBER	70143-5248686	C.O. AREA	SUNNYMEAD
		EXCH. CODE	SUNNYMEAD
DRAWN DATE: 01/06/2020	ENGR: DANIELLE SAMANIEGO	CNTY:	SAN BERNARDINO
SCALE: 1:100	PHONE: 909-748-6676	FILE:	70143-5248686.DWG
TWSHP: —	TAX DISTRICT: —	DWG	5 OF 8
	RNG: —	SEC:	—

5

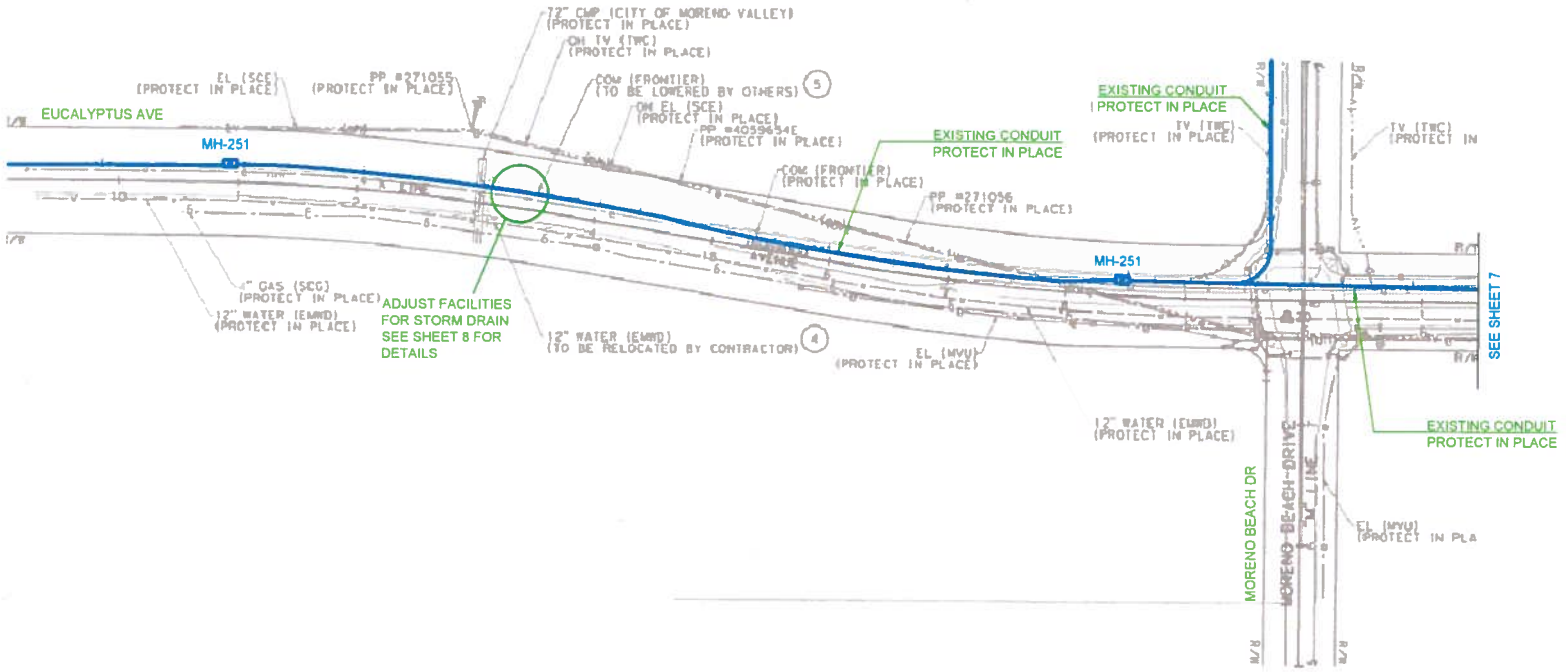

Frontier COMMUNICATIONS

SR-60 MORENO BEACH INTERCHANGE
RELOCATION OF FACILITIES

PROJECT NUMBER:	70143-5248686	C.O. AREA:	SUNNYMEAD
		EXCH. CODE:	SUNNYMEAD
DRAWN DATE: 01/06/2020	ENGR: DANIELLE SAMANIEGO	CNTY:	SAN BERNARDINO
	PHONE: 909-748-6676	FILE:	70143-5248686.DWG
SCALE: 1:100	TAX DISTRICT: —	DWG:	6 OF 8
TWNSHP —	RNG —	SEC:	—

6

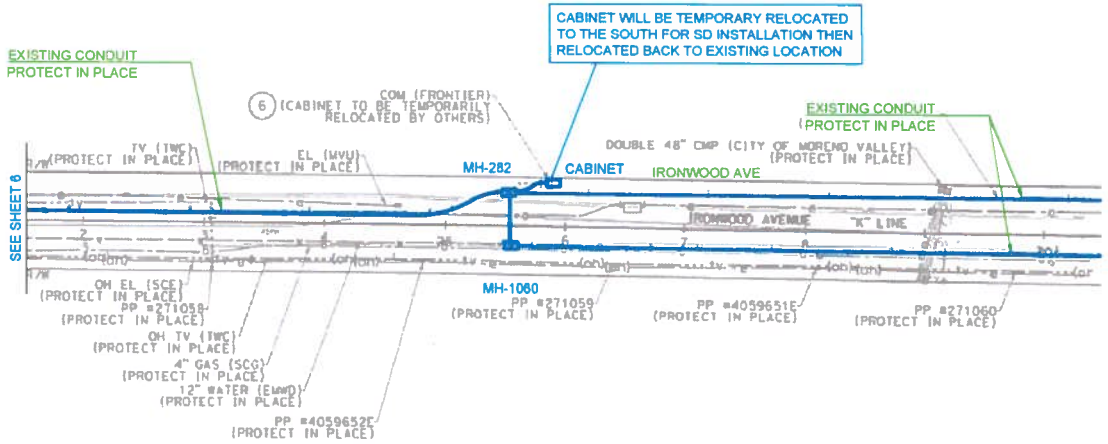

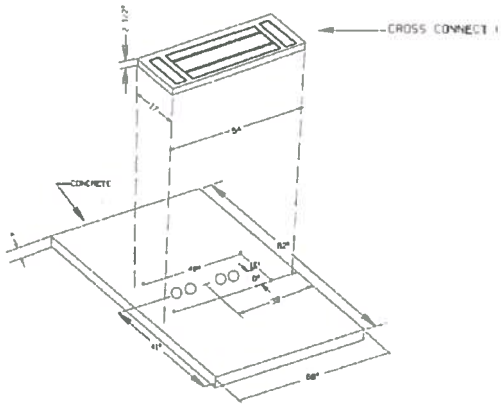

CROSS CONNECT CABINET PAD DETAIL

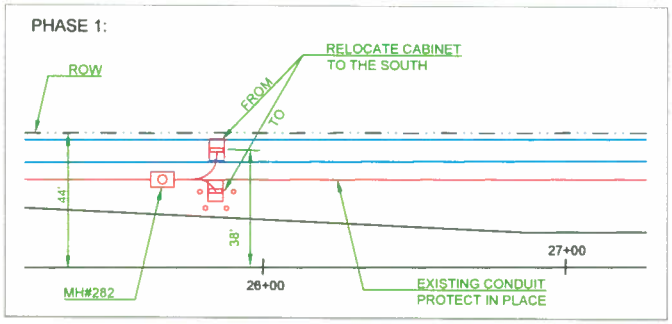

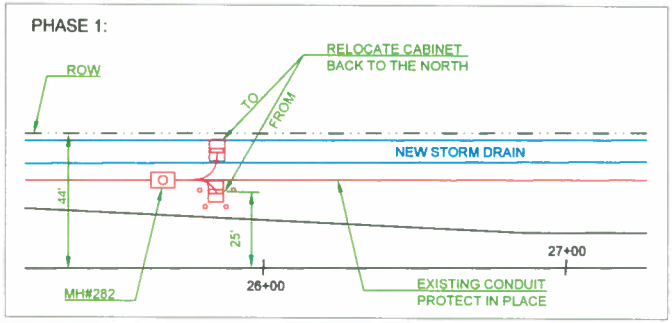

PHASE 1: WILL NEED TO TEMPORARY RELOCATE CABINET XT-EF PRIOR TO CONSTRUCTION OF STORM DRAIN BY PHYSICALLY MOVING IT OUT OF THE WAY. PLACE BOLLARDS TO PROTECT THE CABINET WHILE IT IS IN ITS TEMPORARY LOCATION. DISTANCE BETWEEN CENTER OF EXISTING CABINET AND CENTER OF PROPOSED CABINET IS ABOUT 13FT.

PHASE 2: AFTER STORM DRAIN IS INSTALLED, FRONTIER WILL NEED TO RELOCATE CABINET A SECOND TIME BACK TO ORIGINAL LOCATION.

FOR THE CABINET RELOCATION:

1.) BREAK OUT AND REMOVE EXISTING PAD, TEMPORARILY SUPPORT CABINET IF NEEDED. EXCAVATE TO EXPOSE CONDUITS FROM MANHOLE UP TO CROSS CONNECT CABINET. BREAK OUT CONDUIT FROM ABOUT 5FT OUTSIDE OF MANHOLE TO CABINET TO EXPOSE CABLES.

2.) SECURE CABLES AT CROSS CONNECT BASE AND CABINET RISERS TO AVOID DAMAGE. EXCAVATE LOCATION FOR CABLE MOVEMENT TO NEW LOCATION. LIFT AND RELOCATE CABLE AND CABINET TO PROPOSED LOCATION.

3.) SECURE CABINET AND CABLES AT NEW LOCATION. PLACE SPLIT DUCT OVER EXPOSED CABLES AND TIE BACK INTO MANHOLE. POUR AND PLACE NEW PAD AT NEW CABINET LOCATION.

Frontier COMMUNICATIONS

SR-60 MORENO BEACH INTERCHANGE
RELOCATION OF FACILITIES

PROJECT NUMBER: 70143-5248686		C.O. AREA: SUNNYMEAD	
		EXCH. CODE: SUNNYMEAD	
DRAWN DATE: 01/05/2220	ENGR: DANIELLE SAMANIEGO	CNTY: SAN BERNARDINO	
SCALE: 1:100	PHONE: 909-748-8576	FILE: 70143-5248686.DWG	
TWNSHP: —	TAX DISTRICT: —	DWG: 7 OF 8	
	RNG: —	SEC: —	

7

CONST NOTES:

1.) TRENCH APPROX 15FT ON BOTH SIDES OF THE STORM DRAIN CROSSING (AROUND STATION 13+45) TO EXPOSE EXISTING CONDUITS. LOWER THE CONDUITS TO BE A FOOT UNDER THE PROPOSED STORM DRAIN, APPROX 2.5FT FROM CURRENT LOCATION (CONFIRM WITH ON-SITE CONTRACTOR DEPTH INFORMATION) - SPLAY AND SLURRY THE CONDUITS.

THESE FACILITIES WERE POTHOLED AT STATION 13+12 AND THE TOP OF THE CONDUITS WERE FOUND TO BE AT APPROX 9FT FROM ORIGINAL GROUND ELEVATION. SHORING SHOULD BE REQUIRED DURING THIS ADJUSTMENT.

TOP
(12FT BELOW ORIGINAL GRADE)

SPLAY AND SLURRY CONDUITS

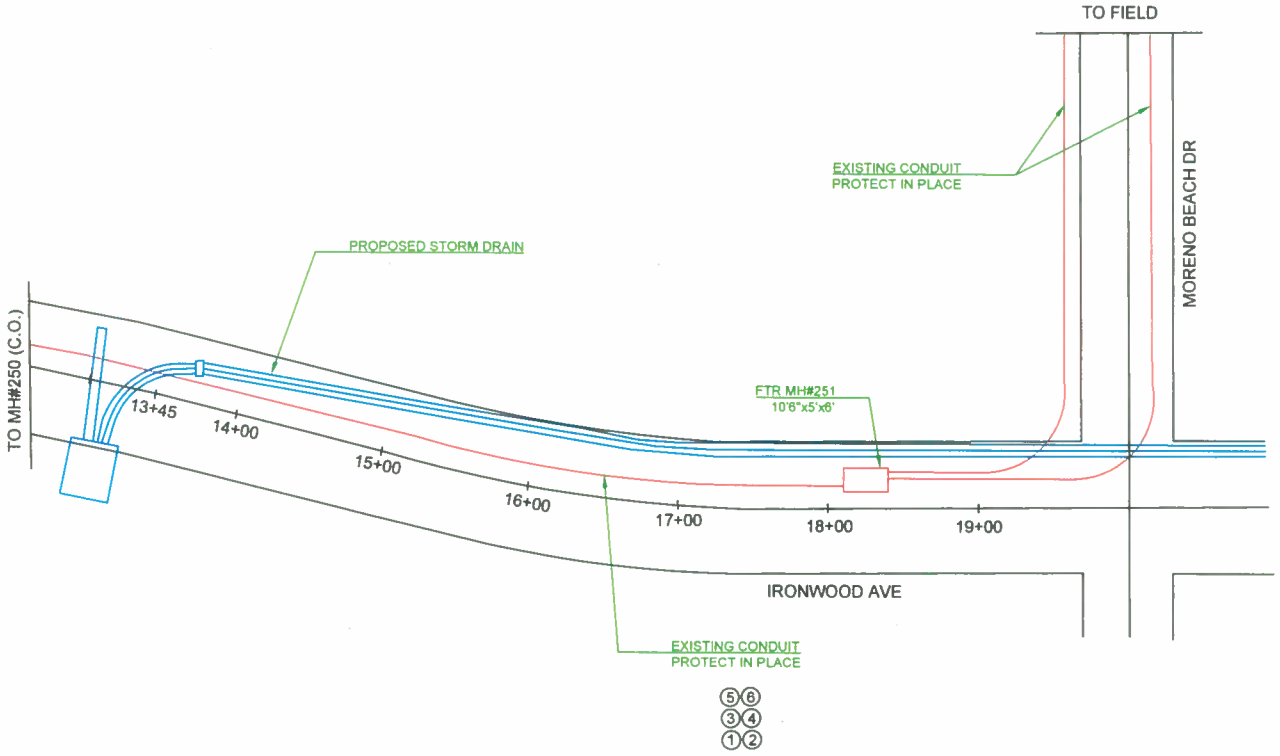

Frontier COMMUNICATIONS

SR-60 MORENO BEACH INTERCHANGE
RELOCATION OF FACILITIES

PROJECT NUMBER:	70143-5248686	C.O. AREA: SUNNYMEAD EXCH. CODE: SUNNYMEAD	
DRAWN DATE: 01/05/2020	ENGR: DANIELLE SAMANIEGO PHONE: 909-748-6878	CNTY: SAN BERNARDINO FILE: 70143-5248686.DWG	
SCALE: 1:80	TAX DISTRICT: —	DWG 8 OF 8	
TWNSHP: —	RNG: —	SEC: —	

APPENDIX L

RIGHT OF ENTRY AGREEMENT FOR CALVARY CHAPEL

Commonwealth Land Title Company

Exempt from Recording Fee per
Govt. Code Sec. 6103
City of Moreno Valley

Recording requested by and when
recorded mail to:
City Clerk
City of Moreno Valley
P.O. Box 88005
Moreno Valley, CA 92552-0805

DOC # 2013-0498457
10/18/2013 08:00 AM Fees: $0.00
Page 1 of 6
Recorded in Official Records
County of Riverside
Larry W. Ward
Assessor, County Clerk & Recorder

This document was electronically submitted to the County of Riverside for recording
Receipted by: AGARRETT

Project: SR60/Moreno Beach Drive Interchange
APN: 473-160-009
TRA 021-011

(Space above this line for Recorder's use)
DOCUMENTARY TRANSFER TAX IS NONE.
Public Agency exempt.
Revenue and Taxation Code Section 11922

TEMPORARY CONSTRUCTION EASEMENT

FOR A VALUABLE CONSIDERATION, receipt of which is hereby acknowledged, **Calvary Chapel of Moreno Valley, a Non-profit corporation,** hereby grants to the CITY OF MORENO VALLEY, a municipal corporation, a Temporary Construction Easement interest in a portion of real property located within the City of Moreno Valley, County of Riverside, State of California, described in Exhibit "A" and shown in Exhibit "B", attached hereto, and made a part hereof, to facilitate and accomplish the construction of SR-60/Moreno Beach Interchange Project.

A forty-eight (48) hour written notice shall be given to Grantor prior to using the rights herein granted. The rights herein granted may be exercised for eighteen (18) months from the forty-eight (48) hour written notice.

Grantor, their assigns and successors in interest, shall be bound by all the terms and conditions contained in this Easement, and all the parties thereto shall be jointly and severally liable thereunder.

IN WITNESS WHEREOF, the grantor hereto has caused this Temporary Construction Easement Deed to be executed as of this 18 day of Sep, 2013.

Assessor's Parcel Number: 473-160-009

GRANTOR: Calvary Chapel of Moreno Valley, a Non-profit corporation

Date: 9/18/2013

By: John K Milhouse

Name: John K. Milhouse

Title: President

(Notary Attached)

APPENDIX M

U.S. ARMY CORPS OF ENGINEERS 404 PERMIT

DEPARTMENT OF THE ARMY
U.S. ARMY CORPS OF ENGINEERS, LOS ANGELES DISTRICT
60 S CALIFORNIA STREET, SUITE 201
VENTURA, CA 93001-2598

February 26, 2020

SUBJECT: Nationwide Permit (NWP) Verification

Margery Lazarus
City of Moreno Valley
14177 Frederick Street
Moreno Valley, CA 92552

Dear Ms. Lazarus:

I am responding to your request (SPL-2019-00862-EBR) for a Department of the Army permit for your proposed project, Caltrans State Route 60/Moreno Beach Interchange Project (City of Moreno Beach). The proposed project is located within Riverside County, California (lat.: 33.93975, long: -117.17692).

Because this project would result in a discharge of dredged and/or fill material into waters of the U.S., a Department of the Army permit is required pursuant to Section 404 of the Clean Water Act (33 USC 1344; 33 CFR parts 323 and 330).

I have determined construction of your proposed project, if constructed as described in your application, would comply with NWP 14 *Linear Transportation Projects*. Specifically, and as shown in the enclosed figure, you are authorized to:

1. Permanently impact 0.06 acres (146.27 linear feet) of non-wetland waters of the U.S. to displace and grade soil and install road/fill and appurtenances; and
2. Temporarily impact 0.14 acres (280.79 linear feet) of non-wetland waters of the U.S. to displace and grade soil, and install temporary ramps/structures.

For this NWP verification letter to be valid, you must comply with all of the terms and conditions in Enclosure 1. Furthermore, you must comply with the non-discretionary Special Conditions listed below:

1. This permit is contingent upon the issuance of a Section 401 Water Quality Certification (WQC) from the Santa Ana Regional Water Quality Control Board (RWQCB). The Permittee shall abide by the terms and conditions of the Clean Water Act Section 401 WQC. The Permittee shall submit the Section 401 WQC to the Corps Regulatory Division (preferably via email) within two weeks of receipt from the issuing state agency. The Permittee shall not proceed with construction until receiving an email or other written notification from Corps Regulatory Division acknowledging the Clean Water Act 401 WQC has been received, reviewed, and determined to be acceptable. If the RWQCB fails to act on a request for certification within 60 days after receipt of a complete application, please

notify the Corps so we may consider whether a waiver of water quality certification is warranted pursuant to 33 CFR 325.2(b)(1)(ii).

2. Within 45 calendar days of completion of authorized work in waters of the U.S., the Permittee shall submit to the Corps Regulatory Division a post-project implementation memorandum including the following information:

    A. Date(s) work within waters of the U.S. was initiated and completed;
    B. Summary of compliance status with each special condition of this permit (including any noncompliance that previously occurred or is currently occurring and corrective actions taken or proposed to achieve compliance);
    C. Color photographs (including map of photopoints) taken at the project site before and after construction for those aspects directly associated with permanent impacts to waters of the U.S. such that the extent of authorized fills can be verified;
    D. One copy of "as built" drawings for the entire project. Electronic submittal (Adobe PDF format) is preferred. All sheets must be signed, dated, and to-scale. If submitting paper copies, sheets must be no larger than 11 x 17 inches; and
    E. Signed Certification of Compliance (attached as part of this permit package).

This verification is valid through March 18, 2022. If on March 18, 2022 you have commenced or are under contract to commence the permitted activity you will have an additional twelve (12) months to complete the activity under the present NWP terms and conditions. However, if I discover noncompliance or unauthorized activities associated with the permitted activity I may request the use of discretionary authority in accordance with procedures in 33 CFR part 330.4(e) and 33 CFR part 330.5(c) or (d) to modify, suspend, or revoke this specific verification at an earlier date. Additionally, at the national level the Chief of Engineers, any time prior to March 18, 2022, may choose to modify, suspend, or revoke the nationwide use of a NWP after following procedures set forth in 33 CFR part 330.5. It is incumbent upon you to comply with all of the terms and conditions of this NWP verification and to remain informed of any change to the NWPs.

A NWP does not grant any property rights or exclusive privileges. Additionally, it does not authorize any injury to the property, rights of others, nor does it authorize interference with any existing or proposed Federal project. Furthermore, it does not obviate the need to obtain other Federal, state, or local authorizations required by law.

Thank you for participating in the Regulatory Program. If you have any questions, please contact Emma Ross at (805) 585-2149 or via email at Emma.B.Ross@usace.army.mil. Please help me to evaluate and improve the regulatory experience for others by completing the customer survey form at http://corpsmapu.usace.army.mil/cm_apex/f?p=regulatory_survey.

Sincerely,

ALLEN.AARON.O.1232270795 Digitally signed by ALLEN.AARON.O.1232270795 Date: 2020.02.26 11:30:35 -08'00'

Aaron O. Allen, Ph.D.
Chief, North Coast Branch
Regulatory Division

LOS ANGELES DISTRICT
U.S. ARMY CORPS OF ENGINEERS

CERTIFICATE OF COMPLIANCE WITH DEPARTMENT OF THE ARMY NATIONWIDE PERMIT

Permit Number: *SPL-2019-00862-EBR*

Name of Permittee: *Margery Lazarus, City of Moreno Valley*

Date of Issuance: *February 26, 2020*

Upon completion of the activity authorized by this permit and the mitigation required by this permit, sign this certificate, and return it by **ONE** of the following methods;

1) Email a digital scan of the signed certificate to Emma.B.Ross@usace.army.mil

OR

2) Mail the signed certificate to

U.S. Army Corps of Engineers
ATTN: Regulatory Division SPL-2019-00862-EBR
60 S California Street, Suite 201
Ventura, CA 93001-2598

I hereby certify that the authorized work and any required compensatory mitigation has been completed in accordance with the NWP authorization, including all general, regional, or activity-specific conditions. Furthermore, if credits from a mitigation bank or in-lieu fee program were used to satisfy compensatory mitigation requirements I have attached the documentation required by 33 CFR 332.3(l)(3) to confirm that the appropriate number and resource type of credits have been secured.

_____ _____

Signature of Permittee Date

Figure 1
REGIONAL MAP
STATE ROUTE 60 / MORENO BEACH DRIVE INTERCHANGE
AND NASON STREET OVERCROSSING IMPROVEMENTS

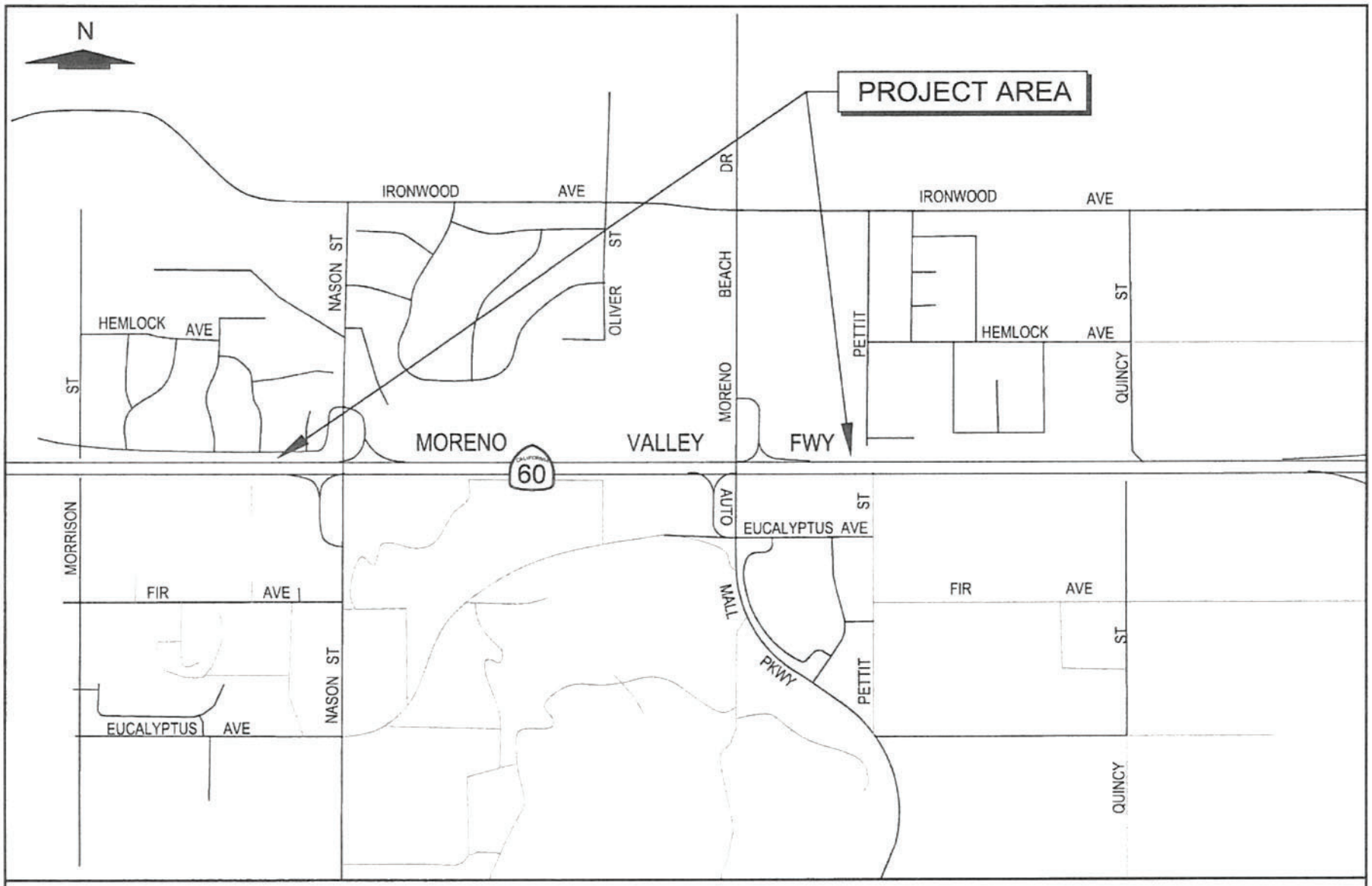

Figure 2

VICINITY MAP

STATE ROUTE 60 / MORENO BEACH DRIVE INTERCHANGE
AND NASON STREET OVERCROSSING IMPROVEMENTS

STATE ROUTE 60 / MORENO BEACH DRIVE INTERCHANGE AND NASON STREET OVERCROSSING IMPROVEMENTS

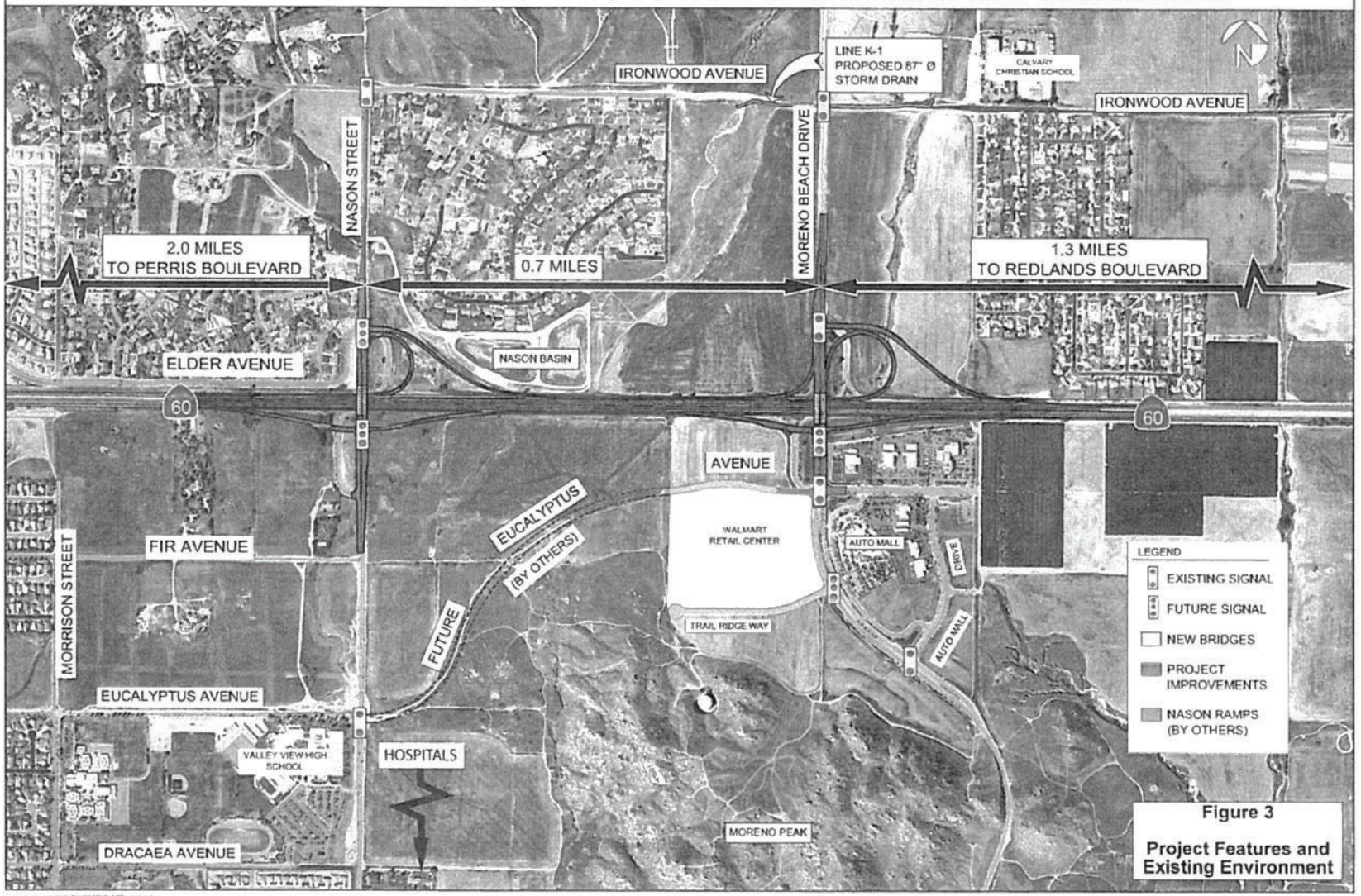

Figure 3

Project Features and Existing Environment

SOURCE: **PARSONS** 2005

STATE ROUTE 60/MORENO BEACH DRIVE INTERCHANGE
AND NASON STREET OVERCROSSING IMPROVEMENTS
MORENO VALLEY, RIVERSIDE COUNTY EA 323010
08-Riv-60-PM 17.9-19.8

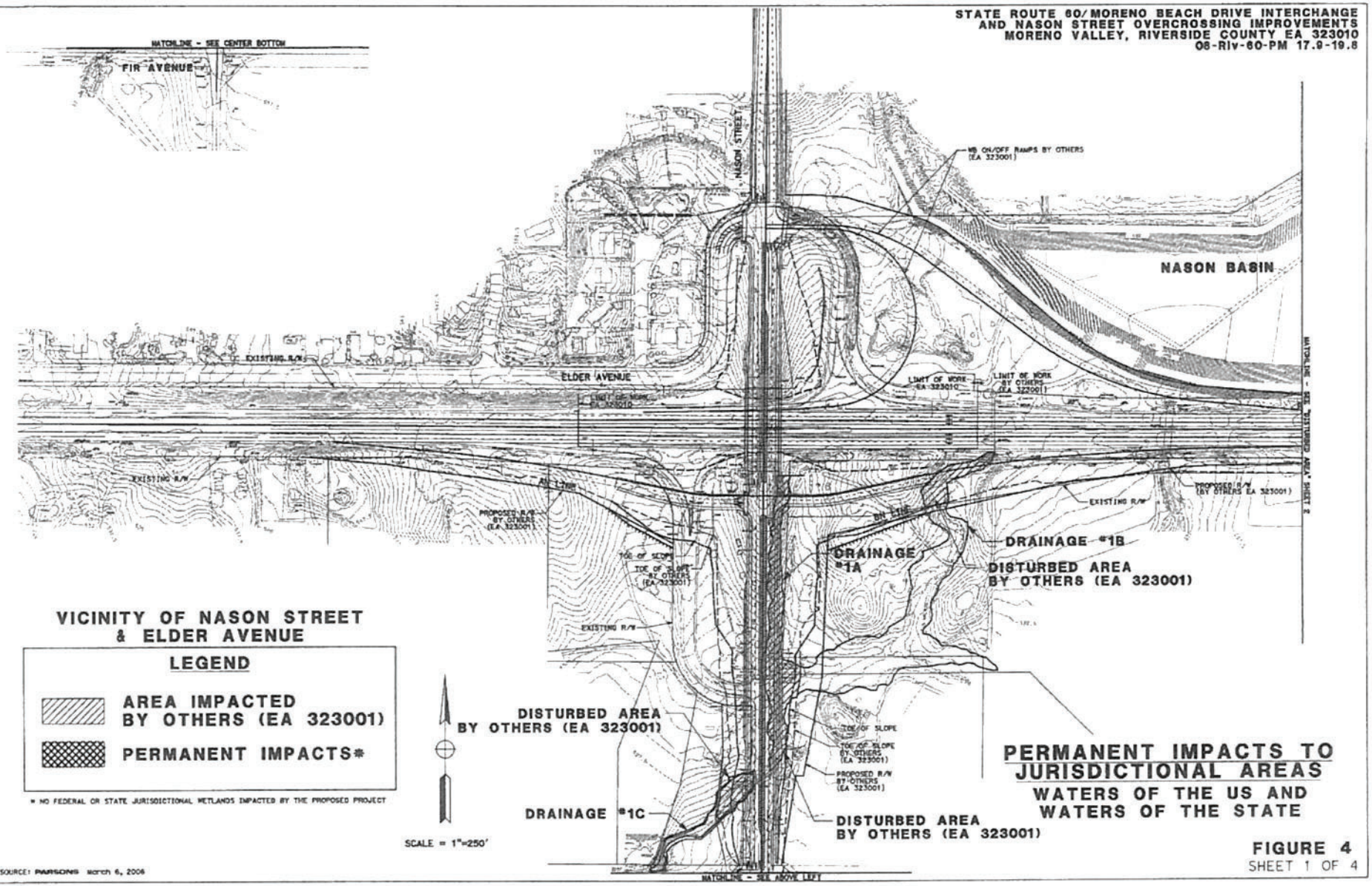

VICINITY OF NASON STREET
& ELDER AVENUE

LEGEND

AREA IMPACTED BY OTHERS (EA 323001)

PERMANENT IMPACTS*

* NO FEDERAL OR STATE JURISDICTIONAL WETLANDS IMPACTED BY THE PROPOSED PROJECT

SCALE = 1"=250'

SOURCE: PARSONS March 6, 2006

PERMANENT IMPACTS TO JURISDICTIONAL AREAS

WATERS OF THE US AND
WATERS OF THE STATE

FIGURE 4
SHEET 1 OF 4

STATE ROUTE 60/MORENO BEACH DRIVE INTERCHANGE
AND NASON STREET OVERCROSSING IMPROVEMENTS
MORENO VALLEY, RIVERSIDE COUNTY EA 323010
08-Riv-60-PM 17.9-19.8

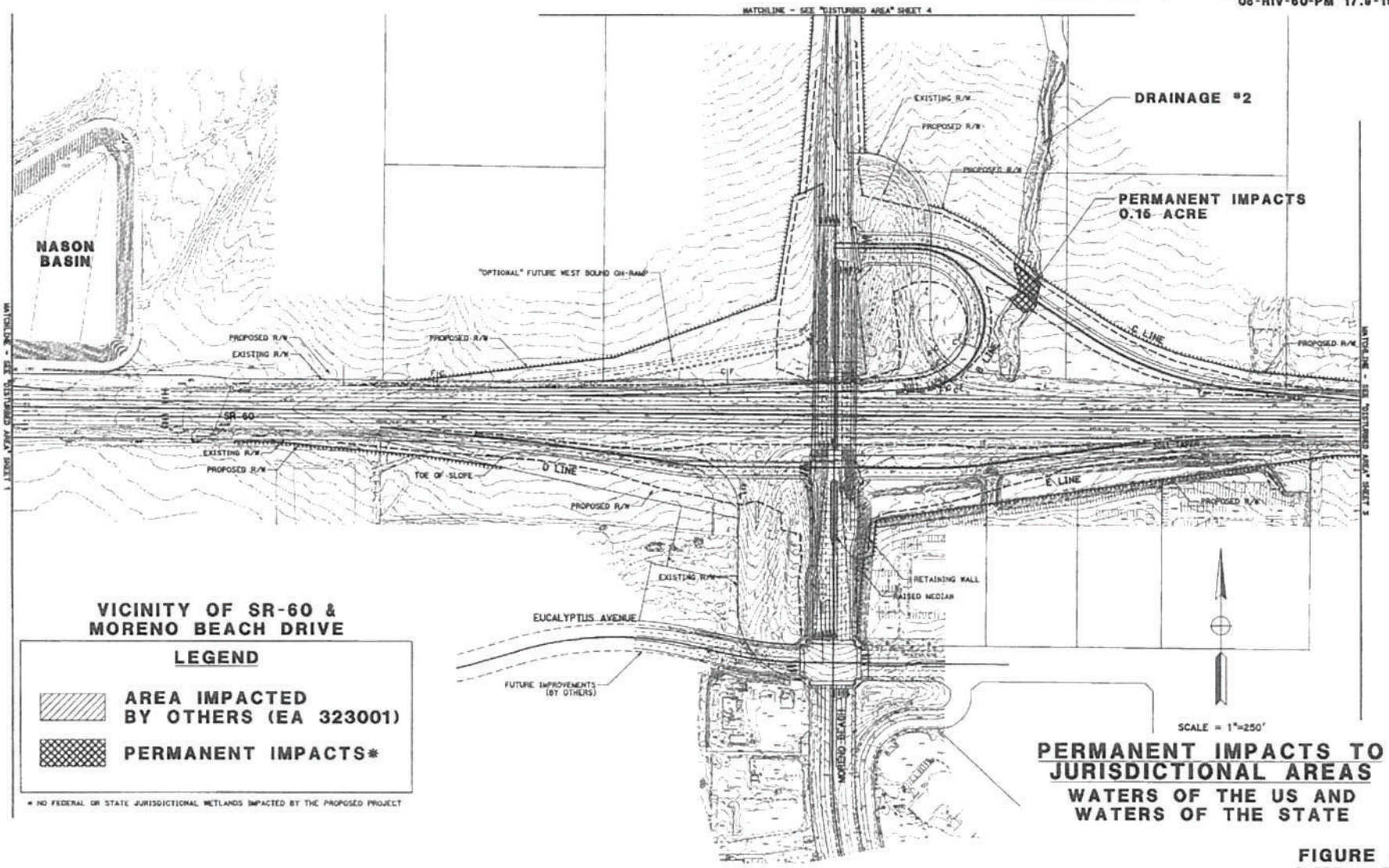

VICINITY OF SR-60 &
MORENO BEACH DRIVE

LEGEND

AREA IMPACTED BY OTHERS (EA 323001)

PERMANENT IMPACTS*

* NO FEDERAL OR STATE JURISDICTIONAL WETLANDS IMPACTED BY THE PROPOSED PROJECT

SCALE = 1"=250'

PERMANENT IMPACTS TO JURISDICTIONAL AREAS

WATERS OF THE US AND WATERS OF THE STATE

SOURCE: PARSONS March 6, 2009

FIGURE 4
SHEET 2 OF 4

STATE ROUTE 60/MORENO BEACH DRIVE INTERCHANGE
AND NASON STREET OVERCROSSING IMPROVEMENTS
MORENO VALLEY, RIVERSIDE COUNTY EA 323010
08-Riv-60-PM 17.9-19.8

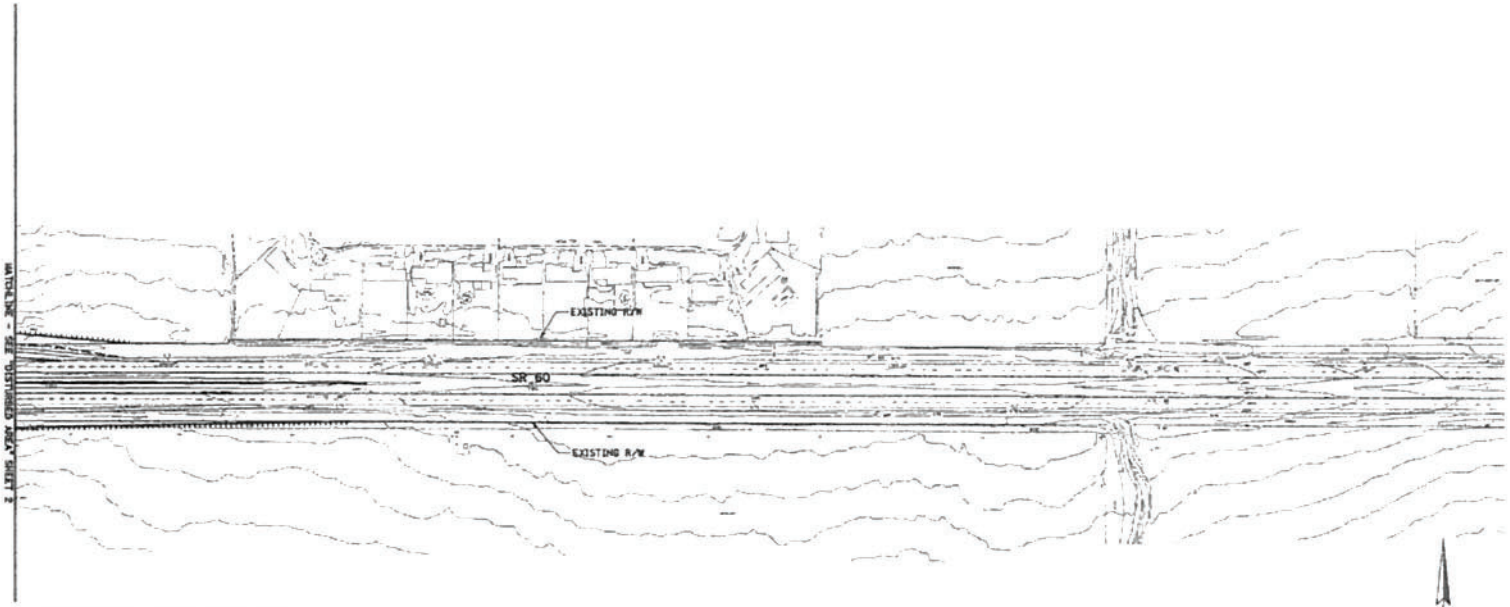

VICINITY OF SR-60,
EAST OF MORENO BEACH DRIVE

LEGEND

AREA IMPACTED BY OTHERS (EA 323001)

PERMANENT IMPACTS*

* NO FEDERAL OR STATE JURISDICTIONAL WETLANDS IMPACTED BY THE PROPOSED PROJECT

SCALE = 1"=250'

PERMANENT IMPACTS TO JURISDICTIONAL AREAS

WATERS OF THE US AND WATERS OF THE STATE

SOURCE: PARSONS March 6, 2006

FIGURE 4
SHEET 3 OF 4

STATE ROUTE 60/MORENO BEACH DRIVE INTERCHANGE
AND NASON STREET OVERCROSSING IMPROVEMENTS
MORENO VALLEY, RIVERSIDE COUNTY EA 323010
08-Riv-60-PM 17.9-19.8

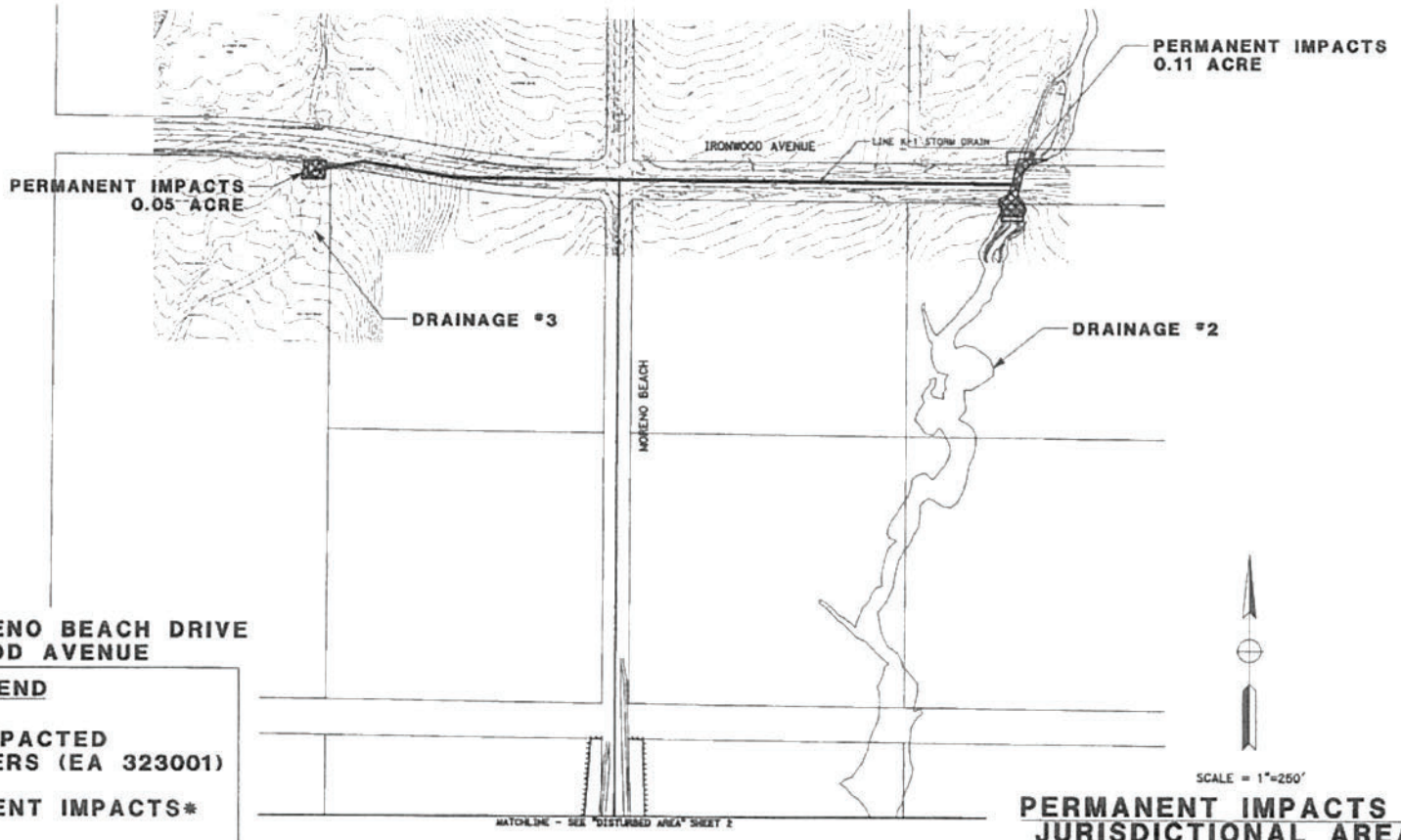

VICINITY OF MORENO BEACH DRIVE
& IRONWOOD AVENUE

LEGEND

AREA IMPACTED BY OTHERS (EA 323001)

PERMANENT IMPACTS*

* NO FEDERAL OR STATE JURISDICTIONAL WETLANDS IMPACTED BY THE PROPOSED PROJECT

SCALE = 1"=250'

PERMANENT IMPACTS TO JURISDICTIONAL AREAS

WATERS OF THE US AND WATERS OF THE STATE

SOURCE: PARSONS March 6, 2006

FIGURE 4
SHEET 4 OF 4

Enclosure 1: NATIONWIDE PERMIT NUMBER(S) NWP 14 Linear Transportation Projects

1. Nationwide Permit(s) NWP 14 Linear Transportation Projects Terms:

14. Linear Transportation Projects. Activities required for crossings of waters of the United States associated with the construction, expansion, modification, or improvement of linear transportation projects (e.g., roads, highways, railways, trails, airport runways, and taxiways) in waters of the United States. For linear transportation projects in non-tidal waters, the discharge cannot cause the loss of greater than 1/2-acre of waters of the United States. For linear transportation projects in tidal waters, the discharge cannot cause the loss of greater than 1/3-acre of waters of the United States. Any stream channel modification, including bank stabilization, is limited to the minimum necessary to construct or protect the linear transportation project; such modifications must be in the immediate vicinity of the project. This NWP also authorizes temporary structures, fills, and work, including the use of temporary mats, necessary to construct the linear transportation project. Appropriate measures must be taken to maintain normal downstream flows and minimize flooding to the maximum extent practicable, when temporary structures, work, and discharges, including cofferdams, are necessary for construction activities, access fills, or dewatering of construction sites. Temporary fills must consist of materials, and be placed in a manner, that will not be eroded by expected high flows. Temporary fills must be removed in their entirety and the affected areas returned to pre-construction elevations. The areas affected by temporary fills must be revegetated, as appropriate. This NWP cannot be used to authorize non-linear features commonly associated with transportation projects, such as vehicle maintenance or storage buildings, parking lots, train stations, or aircraft hangars. Notification: The permittee must submit a pre-construction notification to the district engineer prior to commencing the activity if: (1) the loss of waters of the United States exceeds 1/10-acre; or (2) there is a discharge in a special aquatic site, including wetlands. (See general condition 32.) (Authorities: Sections 10 and 404) Note 1: For linear transportation projects crossing a single waterbody more than one time at separate and distant locations, or multiple waterbodies at separate and distant locations, each crossing is considered a single and complete project for purposes of NWP authorization. Linear transportation projects must comply with 33 CFR 330.6(d). Note 2: Some discharges for the construction of farm roads or forest roads, or temporary roads for moving mining equipment, may qualify for an exemption under section 404(f) of the Clean Water Act (see 33 CFR 323.4). Note 3: For NWP 14 activities that require pre-construction notification, the PCN must include any other NWP(s), regional general permit(s), or individual permit(s) used or intended to be used to authorize any part of the proposed project or any related activity, including other separate and distant crossings that require Department of the Army authorization but do not require pre-construction notification (see paragraph (b) of general condition 32). The district engineer will evaluate the PCN in accordance with Section D, Â¿District EngineerÂ¿s Decision.Â¿ The district engineer may require mitigation to ensure that the authorized activity results in no more than minimal individual and cumulative adverse environmental effects (see general condition 23).

2. General Conditions: The following general conditions must be followed in order for any authorization by an NWP to be valid:

1. Navigation. (a) No activity may cause more than a minimal adverse effect on navigation.

(b) Any safety lights and signals prescribed by the U.S. Coast Guard, through regulations or otherwise, must be installed and maintained at the permittee's expense on authorized facilities in navigable waters of the United States.

(c) The permittee understands and agrees that, if future operations by the United States require the removal, relocation, or other alteration, of the structure or work herein authorized, or if, in the opinion of the Secretary of the Army or his authorized representative, said structure or work shall cause unreasonable obstruction to the free navigation of the navigable waters, the permittee will be required, upon due notice from the Corps of Engineers, to remove, relocate, or alter the structural work or obstructions caused thereby, without expense to the United States. No claim shall be made against the United States on account of any such removal or alteration.

2. Aquatic Life Movements. No activity may substantially disrupt the necessary life cycle movements of those species of aquatic life indigenous to the waterbody, including those species that normally migrate through the area, unless the activity's primary purpose is to impound water. All permanent and temporary crossings of waterbodies shall be suitably culverted, bridged, or otherwise designed and constructed to maintain low flows to sustain the movement of those aquatic species. If a bottomless culvert cannot be used, then the crossing should be designed and constructed to minimize adverse effects to aquatic life movements.

3. Spawning Areas. Activities in spawning areas during spawning seasons must be avoided to the maximum extent practicable. Activities that result in the physical destruction (e.g., through excavation, fill, or downstream smothering by substantial turbidity) of an important spawning area are not authorized.

4. Migratory Bird Breeding Areas. Activities in waters of the United States that serve as breeding areas for migratory birds must be avoided to the maximum extent practicable.

5. Shellfish Beds. No activity may occur in areas of concentrated shellfish populations, unless the activity is directly related to a shellfish harvesting activity authorized by NWPs 4 and 48, or is a shellfish seeding or habitat restoration activity authorized by NWP 27.

6. Suitable Material. No activity may use unsuitable material (e.g., trash, debris, car bodies, asphalt, etc.). Material used for construction or discharged must be free from toxic pollutants in toxic amounts (see section 307 of the Clean Water Act).

7. Water Supply Intakes. No activity may occur in the proximity of a public water supply intake, except where the activity is for the repair or improvement of public water supply intake structures or adjacent bank stabilization.

8. Adverse Effects From Impoundments. If the activity creates an impoundment of water, adverse effects to the aquatic system due to accelerating the passage of water, and/or restricting its flow must be minimized to the maximum extent practicable.

9. Management of Water Flows. To the maximum extent practicable, the pre-construction course, condition, capacity, and location of open waters must be maintained for each activity, including stream channelization, storm water management activities, and temporary and permanent road crossings, except as provided below. The activity must be constructed to withstand expected high flows. The activity must not restrict or impede the passage of normal or high flows, unless the primary purpose of the activity is to impound water or manage high flows. The activity may alter the pre-construction course, condition, capacity, and location of open waters if it benefits the aquatic environment (e.g., stream restoration or relocation activities).

10. Fills Within 100-Year Floodplains. The activity must comply with applicable FEMA-approved state or local floodplain management requirements.

11. Equipment. Heavy equipment working in wetlands or mudflats must be placed on mats, or other measures must be taken to minimize soil disturbance.

12. Soil Erosion and Sediment Controls. Appropriate soil erosion and sediment controls must be used and maintained in effective operating condition during construction, and all exposed soil and other fills, as well as any work below the ordinary high water mark or high tide line, must be permanently stabilized at the earliest practicable date. Permittees are encouraged to perform work within waters of the United States during periods of low-flow or no-flow, or during low tides.

13. Removal of Temporary Fills. Temporary fills must be removed in their entirety and the affected areas returned to pre-construction elevations. The affected areas must be revegetated, as appropriate.

14. Proper Maintenance. Any authorized structure or fill shall be properly maintained, including maintenance to ensure public safety and compliance with applicable NWP general conditions, as well as any activity-specific conditions added by the district engineer to an NWP authorization.

15. Single and Complete Project. The activity must be a single and complete project. The same NWP cannot be used more than once for the same single and complete project.

16. Wild and Scenic Rivers. (a) No NWP activity may occur in a component of the National Wild and Scenic River System, or in a river officially designated by Congress as a "study river" for possible inclusion in the system while the river is in an official study status, unless the appropriate Federal agency with direct management responsibility for such river, has determined in writing that the proposed activity will not adversely affect the Wild and Scenic River designation or study status.

(b) If a proposed NWP activity will occur in a component of the National Wild and Scenic River System, or in a river officially designated by Congress as a "study river" for possible inclusion in the system while the river is in an official study status, the permittee must submit a pre-construction notification (see general condition 32). The district engineer will coordinate the PCN with the Federal agency with direct management responsibility for that river. The permittee shall not begin the NWP activity until notified by the district engineer that the Federal agency with direct management responsibility for that river has determined in writing that the proposed NWP activity will not adversely affect the Wild and Scenic River designation or study status.

(c) Information on Wild and Scenic Rivers may be obtained from the appropriate Federal land management agency responsible for the designated Wild and Scenic River or study river (e.g., National Park Service, U.S. Forest Service, Bureau of Land Management, U.S. Fish and Wildlife Service). Information on these rivers is also available at: http://www.rivers.gov/.

17. Tribal Rights. No NWP activity may cause more than minimal adverse effects on tribal rights (including treaty rights), protected tribal resources, or tribal lands.

18. Endangered Species. (a) No activity is authorized under any NWP which is likely to directly or indirectly jeopardize the continued existence of a threatened or endangered species or a species proposed for

such designation, as identified under the Federal Endangered Species Act (ESA), or which will directly or indirectly destroy or adversely modify the critical habitat of such species. No activity is authorized under any NWP which “may affect” a listed species or critical habitat, unless ESA section 7 consultation addressing the effects of the proposed activity has been completed. Direct effects are the immediate effects on listed species and critical habitat caused by the NWP activity. Indirect effects are those effects on listed species and critical habitat that are caused by the NWP activity and are later in time, but still are reasonably certain to occur.

(b) Federal agencies should follow their own procedures for complying with the requirements of the ESA. If pre-construction notification is required for the proposed activity, the Federal permittee must provide the district engineer with the appropriate documentation to demonstrate compliance with those requirements. The district engineer will verify that the appropriate documentation has been submitted. If the appropriate documentation has not been submitted, additional ESA section 7 consultation may be necessary for the activity and the respective federal agency would be responsible for fulfilling its obligation under section 7 of the ESA.

(c) Non-federal permittees must submit a pre-construction notification to the district engineer if any listed species or designated critical habitat might be affected or is in the vicinity of the activity, or if the activity is located in designated critical habitat, and shall not begin work on the activity until notified by the district engineer that the requirements of the ESA have been satisfied and that the activity is authorized. For activities that might affect Federally-listed endangered or threatened species or designated critical habitat, the pre-construction notification must include the name(s) of the endangered or threatened species that might be affected by the proposed activity or that utilize the designated critical habitat that might be affected by the proposed activity. The district engineer will determine whether the proposed activity “may affect” or will have “no effect” to listed species and designated critical habitat and will notify the non-Federal applicant of the Corps’ determination within 45 days of receipt of a complete pre-construction notification. In cases where the non-Federal applicant has identified listed species or critical habitat that might be affected or is in the vicinity of the activity, and has so notified the Corps, the applicant shall not begin work until the Corps has provided notification that the proposed activity will have “no effect” on listed species or critical habitat, or until ESA section 7 consultation has been completed. If the non-Federal applicant has not heard back from the Corps within 45 days, the applicant must still wait for notification from the Corps.

(d) As a result of formal or informal consultation with the FWS or NMFS the district engineer may add species-specific permit conditions to the NWPs.

(e) Authorization of an activity by an NWP does not authorize the “take” of a threatened or endangered species as defined under the ESA. In the absence of separate authorization (e.g., an ESA Section 10 Permit, a Biological Opinion with “incidental take” provisions, etc.) from the FWS or the NMFS, the Endangered Species Act prohibits any person subject to the jurisdiction of the United States to take a listed species, where "take" means to harass, harm, pursue, hunt, shoot, wound, kill, trap, capture, or collect, or to attempt to engage in any such conduct. The word “harm” in the definition of “take" means an act which actually kills or injures wildlife. Such an act may include significant habitat modification or degradation where it actually kills or injures wildlife by significantly impairing essential behavioral patterns, including breeding, feeding or sheltering.

(f) If the non-federal permittee has a valid ESA section 10(a)(1)(B) incidental take permit with an approved Habitat Conservation Plan for a project or a group of projects that includes the proposed NWP activity, the non-federal applicant should provide a copy of that ESA section 10(a)(1)(B) permit with the PCN required by paragraph (c) of this general condition. The district engineer will coordinate with the agency that

issued the ESA section 10(a)(1)(B) permit to determine whether the proposed NWP activity and the associated incidental take were considered in the internal ESA section 7 consultation conducted for the ESA section 10(a)(1)(B) permit. If that coordination results in concurrence from the agency that the proposed NWP activity and the associated incidental take were considered in the internal ESA section 7 consultation for the ESA section 10(a)(1)(B) permit, the district engineer does not need to conduct a separate ESA section 7 consultation for the proposed NWP activity. The district engineer will notify the non-federal applicant within 45 days of receipt of a complete pre-construction notification whether the ESA section 10(a)(1)(B) permit covers the proposed NWP activity or whether additional ESA section 7 consultation is required.

(g) Information on the location of threatened and endangered species and their critical habitat can be obtained directly from the offices of the FWS and NMFS or their world wide web pages at http://www.fws.gov/ or http://www.fws.gov/ipac and http://www.nmfs.noaa.gov/pr/species/esa/ respectively.

19. Migratory Birds and Bald and Golden Eagles. The permittee is responsible for ensuring their action complies with the Migratory Bird Treaty Act and the Bald and Golden Eagle Protection Act. The permittee is responsible for contacting appropriate local office of the U.S. Fish and Wildlife Service to determine applicable measures to reduce impacts to migratory birds or eagles, including whether "incidental take" permits are necessary and available under the Migratory Bird Treaty Act or Bald and Golden Eagle Protection Act for a particular activity.

20. Historic Properties. (a) In cases where the district engineer determines that the activity may have the potential to cause effects to properties listed, or eligible for listing, in the National Register of Historic Places, the activity is not authorized, until the requirements of Section 106 of the National Historic Preservation Act (NHPA) have been satisfied.

(b) Federal permittees should follow their own procedures for complying with the requirements of section 106 of the National Historic Preservation Act. If pre-construction notification is required for the proposed NWP activity, the Federal permittee must provide the district engineer with the appropriate documentation to demonstrate compliance with those requirements. The district engineer will verify that the appropriate documentation has been submitted. If the appropriate documentation is not submitted, then additional consultation under section 106 may be necessary. The respective federal agency is responsible for fulfilling its obligation to comply with section 106.

(c) Non-federal permittees must submit a pre-construction notification to the district engineer if the NWP activity might have the potential to cause effects to any historic properties listed on, determined to be eligible for listing on, or potentially eligible for listing on the National Register of Historic Places, including previously unidentified properties. For such activities, the pre-construction notification must state which historic properties might have the potential to be affected by the proposed NWP activity or include a vicinity map indicating the location of the historic properties or the potential for the presence of historic properties. Assistance regarding information on the location of, or potential for, the presence of historic properties can be sought from the State Historic Preservation Officer, Tribal Historic Preservation Officer, or designated tribal representative, as appropriate, and the National Register of Historic Places (see 33 CFR 330.4(g)). When reviewing pre-construction notifications, district engineers will comply with the current procedures for addressing the requirements of section 106 of the National Historic Preservation Act. The district engineer shall make a reasonable and good faith effort to carry out appropriate identification efforts, which may include background research, consultation, oral history interviews, sample field investigation, and field survey. Based

on the information submitted in the PCN and these identification efforts, the district engineer shall determine whether the proposed NWP activity has the potential to cause effects on the historic properties. Section 106 consultation is not required when the district engineer determines that the activity does not have the potential to cause effects on historic properties (see 36 CFR 800.3(a)). Section 106 consultation is required when the district engineer determines that the activity has the potential to cause effects on historic properties. The district engineer will conduct consultation with consulting parties identified under 36 CFR 800.2(c) when he or she makes any of the following effect determinations for the purposes of section 106 of the NHPA: no historic properties affected, no adverse effect, or adverse effect. Where the non-Federal applicant has identified historic properties on which the activity might have the potential to cause effects and so notified the Corps, the non-Federal applicant shall not begin the activity until notified by the district engineer either that the activity has no potential to cause effects to historic properties or that NHPA section 106 consultation has been completed.

(d) For non-federal permittees, the district engineer will notify the prospective permittee within 45 days of receipt of a complete pre-construction notification whether NHPA section 106 consultation is required. If NHPA section 106 consultation is required, the district engineer will notify the non-Federal applicant that he or she cannot begin the activity until section 106 consultation is completed. If the non-Federal applicant has not heard back from the Corps within 45 days, the applicant must still wait for notification from the Corps.

(e) Prospective permittees should be aware that section 110k of the NHPA (54 U.S.C. 306113) prevents the Corps from granting a permit or other assistance to an applicant who, with intent to avoid the requirements of section 106 of the NHPA, has intentionally significantly adversely affected a historic property to which the permit would relate, or having legal power to prevent it, allowed such significant adverse effect to occur, unless the Corps, after consultation with the Advisory Council on Historic Preservation (ACHP), determines that circumstances justify granting such assistance despite the adverse effect created or permitted by the applicant. If circumstances justify granting the assistance, the Corps is required to notify the ACHP and provide documentation specifying the circumstances, the degree of damage to the integrity of any historic properties affected, and proposed mitigation. This documentation must include any views obtained from the applicant, SHPO/THPO, appropriate Indian tribes if the undertaking occurs on or affects historic properties on tribal lands or affects properties of interest to those tribes, and other parties known to have a legitimate interest in the impacts to the permitted activity on historic properties.

21. Discovery of Previously Unknown Remains and Artifacts. If you discover any previously unknown historic, cultural or archeological remains and artifacts while accomplishing the activity authorized by this permit, you must immediately notify the district engineer of what you have found, and to the maximum extent practicable, avoid construction activities that may affect the remains and artifacts until the required coordination has been completed. The district engineer will initiate the Federal, Tribal, and state coordination required to determine if the items or remains warrant a recovery effort or if the site is eligible for listing in the National Register of Historic Places.

22. Designated Critical Resource Waters. Critical resource waters include, NOAA-managed marine sanctuaries and marine monuments, and National Estuarine Research Reserves. The district engineer may designate, after notice and opportunity for public comment, additional waters officially designated by a state as having particular environmental or ecological significance, such as outstanding national resource waters or state natural heritage sites. The district engineer may also designate additional critical resource waters after notice and opportunity for public comment.

(a) Discharges of dredged or fill material into waters of the United States are not authorized by NWPs 7, 12, 14, 16, 17, 21, 29, 31, 35, 39, 40, 42, 43, 44, 49, 50, 51, and 52 for any activity within, or directly affecting, critical resource waters, including wetlands adjacent to such waters.

(b) For NWPs 3, 8, 10, 13, 15, 18, 19, 22, 23, 25, 27, 28, 30, 33, 34, 36, 37, 38, and 54, notification is required in accordance with general condition 32, for any activity proposed in the designated critical resource waters including wetlands adjacent to those waters. The district engineer may authorize activities under these NWPs only after it is determined that the impacts to the critical resource waters will be no more than minimal.

23. Mitigation. The district engineer will consider the following factors when determining appropriate and practicable mitigation necessary to ensure that the individual and cumulative adverse environmental effects are no more than minimal:

(a) The activity must be designed and constructed to avoid and minimize adverse effects, both temporary and permanent, to waters of the United States to the maximum extent practicable at the project site (i.e., on site).

(b) Mitigation in all its forms (avoiding, minimizing, rectifying, reducing, or compensating for resource losses) will be required to the extent necessary to ensure that the individual and cumulative adverse environmental effects are no more than minimal.

(c) Compensatory mitigation at a minimum one-for-one ratio will be required for all wetland losses that exceed 1/10-acre and require pre-construction notification, unless the district engineer determines in writing that either some other form of mitigation would be more environmentally appropriate or the adverse environmental effects of the proposed activity are no more than minimal, and provides an activity-specific waiver of this requirement. For wetland losses of 1/10-acre or less that require pre-construction notification, the district engineer may determine on a case-by-case basis that compensatory mitigation is required to ensure that the activity results in only minimal adverse environmental effects.

(d) For losses of streams or other open waters that require pre-construction notification, the district engineer may require compensatory mitigation to ensure that the activity results in no more than minimal adverse environmental effects. Compensatory mitigation for losses of streams should be provided, if practicable, through stream rehabilitation, enhancement, or preservation, since streams are difficult-to-replace resources (see 33 CFR 332.3(e)(3)).

(e) Compensatory mitigation plans for NWP activities in or near streams or other open waters will normally include a requirement for the restoration or enhancement, maintenance, and legal protection (e.g., conservation easements) of riparian areas next to open waters. In some cases, the restoration or maintenance/protection of riparian areas may be the only compensatory mitigation required. Restored riparian areas should consist of native species. The width of the required riparian area will address documented water quality or aquatic habitat loss concerns. Normally, the riparian area will be 25 to 50 feet wide on each side of the stream, but the district engineer may require slightly wider riparian areas to address documented water quality or habitat loss concerns. If it is not possible to restore or maintain/protect a riparian area on both sides of a stream, or if the waterbody is a lake or coastal waters, then restoring or maintaining/protecting a riparian area along a single bank or shoreline may be sufficient. Where both wetlands and open waters exist on the project site, the district engineer will determine the appropriate compensatory mitigation (e.g., riparian areas and/or wetlands compensation) based on what is best for the aquatic environment on a watershed basis. In cases where

riparian areas are determined to be the most appropriate form of minimization or compensatory mitigation, the district engineer may waive or reduce the requirement to provide wetland compensatory mitigation for wetland losses.

(f) Compensatory mitigation projects provided to offset losses of aquatic resources must comply with the applicable provisions of 33 CFR part 332.

(1) The prospective permittee is responsible for proposing an appropriate compensatory mitigation option if compensatory mitigation is necessary to ensure that the activity results in no more than minimal adverse environmental effects. For the NWPs, the preferred mechanism for providing compensatory mitigation is mitigation bank credits or in-lieu fee program credits (see 33 CFR 332.3(b)(2) and (3)). However, if an appropriate number and type of mitigation bank or in-lieu credits are not available at the time the PCN is submitted to the district engineer, the district engineer may approve the use of permittee-responsible mitigation.

(2) The amount of compensatory mitigation required by the district engineer must be sufficient to ensure that the authorized activity results in no more than minimal individual and cumulative adverse environmental effects (see 33 CFR 330.1(e)(3)). (See also 33 CFR 332.3(f)).

(3) Since the likelihood of success is greater and the impacts to potentially valuable uplands are reduced, aquatic resource restoration should be the first compensatory mitigation option considered for permittee-responsible mitigation.

(4) If permittee-responsible mitigation is the proposed option, the prospective permittee is responsible for submitting a mitigation plan. A conceptual or detailed mitigation plan may be used by the district engineer to make the decision on the NWP verification request, but a final mitigation plan that addresses the applicable requirements of 33 CFR 332.4(c)(2) through (14) must be approved by the district engineer before the permittee begins work in waters of the United States, unless the district engineer determines that prior approval of the final mitigation plan is not practicable or not necessary to ensure timely completion of the required compensatory mitigation (see 33 CFR 332.3(k)(3)).

(5) If mitigation bank or in-lieu fee program credits are the proposed option, the mitigation plan only needs to address the baseline conditions at the impact site and the number of credits to be provided.

(6) Compensatory mitigation requirements (e.g., resource type and amount to be provided as compensatory mitigation, site protection, ecological performance standards, monitoring requirements) may be addressed through conditions added to the NWP authorization, instead of components of a compensatory mitigation plan (see 33 CFR 332.4(c)(1)(ii)).

(g) Compensatory mitigation will not be used to increase the acreage losses allowed by the acreage limits of the NWPs. For example, if an NWP has an acreage limit of 1/2-acre, it cannot be used to authorize any NWP activity resulting in the loss of greater than 1/2-acre of waters of the United States, even if compensatory mitigation is provided that replaces or restores some of the lost waters. However, compensatory mitigation can and should be used, as necessary, to ensure that an NWP activity already meeting the established acreage limits also satisfies the no more than minimal impact requirement for the NWPs.

(h) Permittees may propose the use of mitigation banks, in-lieu fee programs, or permittee-responsible mitigation. When developing a compensatory mitigation proposal, the permittee must consider appropriate and practicable options consistent with the framework at 33 CFR 332.3(b). For activities resulting in the loss of marine or estuarine resources, permittee-responsible mitigation may be environmentally preferable if there are no mitigation banks or in-lieu fee programs in the area that have marine or estuarine credits available for sale or transfer to the permittee. For permittee-responsible mitigation, the special conditions of the NWP verification must clearly indicate the party or parties responsible for the implementation and performance of the compensatory mitigation project, and, if required, its long-term management.

(i) Where certain functions and services of waters of the United States are permanently adversely affected by a regulated activity, such as discharges of dredged or fill material into waters of the United States that will convert a forested or scrub-shrub wetland to a herbaceous wetland in a permanently maintained utility line right-of-way, mitigation may be required to reduce the adverse environmental effects of the activity to the no more than minimal level.

24. Safety of Impoundment Structures. To ensure that all impoundment structures are safely designed, the district engineer may require non-Federal applicants to demonstrate that the structures comply with established state dam safety criteria or have been designed by qualified persons. The district engineer may also require documentation that the design has been independently reviewed by similarly qualified persons, and appropriate modifications made to ensure safety.

25. Water Quality. Where States and authorized Tribes, or EPA where applicable, have not previously certified compliance of an NWP with CWA section 401, individual 401 Water Quality Certification must be obtained or waived (see 33 CFR 330.4(c)). The district engineer or State or Tribe may require additional water quality management measures to ensure that the authorized activity does not result in more than minimal degradation of water quality.

26. Coastal Zone Management. In coastal states where an NWP has not previously received a state coastal zone management consistency concurrence, an individual state coastal zone management consistency concurrence must be obtained, or a presumption of concurrence must occur (see 33 CFR 330.4(d)). The district engineer or a State may require additional measures to ensure that the authorized activity is consistent with state coastal zone management requirements.

27. Regional and Case-By-Case Conditions. The activity must comply with any regional conditions that may have been added by the Division Engineer (see 33 CFR 330.4(e)) and with any case specific conditions added by the Corps or by the state, Indian Tribe, or U.S. EPA in its section 401 Water Quality Certification, or by the state in its Coastal Zone Management Act consistency determination.

28. Use of Multiple Nationwide Permits. The use of more than one NWP for a single and complete project is prohibited, except when the acreage loss of waters of the United States authorized by the NWPs does not exceed the acreage limit of the NWP with the highest specified acreage limit. For example, if a road crossing over tidal waters is constructed under NWP 14, with associated bank stabilization authorized by NWP 13, the maximum acreage loss of waters of the United States for the total project cannot exceed 1/3-acre.

29. Transfer of Nationwide Permit Verifications. If the permittee sells the property associated with a nationwide permit verification, the permittee may transfer the nationwide permit verification to the new owner

by submitting a letter to the appropriate Corps district office to validate the transfer. A copy of the nationwide permit verification must be attached to the letter, and the letter must contain the following statement and signature:

"When the structures or work authorized by this nationwide permit are still in existence at the time the property is transferred, the terms and conditions of this nationwide permit, including any special conditions, will continue to be binding on the new owner(s) of the property. To validate the transfer of this nationwide permit and the associated liabilities associated with compliance with its terms and conditions, have the transferee sign and date below."

_____

(Transferee)

_____

(Date)

30. Compliance Certification. Each permittee who receives an NWP verification letter from the Corps must provide a signed certification documenting completion of the authorized activity and implementation of any required compensatory mitigation. The success of any required permittee-responsible mitigation, including the achievement of ecological performance standards, will be addressed separately by the district engineer. The Corps will provide the permittee the certification document with the NWP verification letter. The certification document will include:

(a) A statement that the authorized activity was done in accordance with the NWP authorization, including any general, regional, or activity-specific conditions;

(b) A statement that the implementation of any required compensatory mitigation was completed in accordance with the permit conditions. If credits from a mitigation bank or in-lieu fee program are used to satisfy the compensatory mitigation requirements, the certification must include the documentation required by 33 CFR 332.3(l)(3) to confirm that the permittee secured the appropriate number and resource type of credits; and

(c) The signature of the permittee certifying the completion of the activity and mitigation.

The completed certification document must be submitted to the district engineer within 30 days of completion of the authorized activity or the implementation of any required compensatory mitigation, whichever occurs later.

31. Activities Affecting Structures or Works Built by the United States. If an NWP activity also requires permission from the Corps pursuant to 33 U.S.C. 408 because it will alter or temporarily or permanently occupy or use a U.S. Army Corps of Engineers (USACE) federally authorized Civil Works project (a "USACE project"), the prospective permittee must submit a pre-construction notification. See paragraph (b)(10) of general condition 32. An activity that requires section 408 permission is not authorized by NWP until the appropriate Corps office issues the section 408 permission to alter, occupy, or use the USACE project,

and the district engineer issues a written NWP verification.

32. Pre-Construction Notification. (a) Timing. Where required by the terms of the NWP, the prospective permittee must notify the district engineer by submitting a pre-construction notification (PCN) as early as possible. The district engineer must determine if the PCN is complete within 30 calendar days of the date of receipt and, if the PCN is determined to be incomplete, notify the prospective permittee within that 30 day period to request the additional information necessary to make the PCN complete. The request must specify the information needed to make the PCN complete. As a general rule, district engineers will request additional information necessary to make the PCN complete only once. However, if the prospective permittee does not provide all of the requested information, then the district engineer will notify the prospective permittee that the PCN is still incomplete and the PCN review process will not commence until all of the requested information has been received by the district engineer. The prospective permittee shall not begin the activity until either:

(1) He or she is notified in writing by the district engineer that the activity may proceed under the NWP with any special conditions imposed by the district or division engineer; or

(2) 45 calendar days have passed from the district engineer's receipt of the complete PCN and the prospective permittee has not received written notice from the district or division engineer. However, if the permittee was required to notify the Corps pursuant to general condition 18 that listed species or critical habitat might be affected or are in the vicinity of the activity, or to notify the Corps pursuant to general condition 20 that the activity might have the potential to cause effects to historic properties, the permittee cannot begin the activity until receiving written notification from the Corps that there is "no effect" on listed species or "no potential to cause effects" on historic properties, or that any consultation required under Section 7 of the Endangered Species Act (see 33 CFR 330.4(f)) and/or section 106 of the National Historic Preservation Act (see 33 CFR 330.4(g)) has been completed. Also, work cannot begin under NWPs 21, 49, or 50 until the permittee has received written approval from the Corps. If the proposed activity requires a written waiver to exceed specified limits of an NWP, the permittee may not begin the activity until the district engineer issues the waiver. If the district or division engineer notifies the permittee in writing that an individual permit is required within 45 calendar days of receipt of a complete PCN, the permittee cannot begin the activity until an individual permit has been obtained. Subsequently, the permittee's right to proceed under the NWP may be modified, suspended, or revoked only in accordance with the procedure set forth in 33 CFR 330.5(d)(2).

(b) Contents of Pre-Construction Notification: The PCN must be in writing and include the following information:

(1) Name, address and telephone numbers of the prospective permittee;

(2) Location of the proposed activity;

(3) Identify the specific NWP or NWP(s) the prospective permittee wants to use to authorize the proposed activity;

(4) A description of the proposed activity; the activity's purpose; direct and indirect adverse environmental effects the activity would cause, including the anticipated amount of loss of wetlands, other special aquatic sites, and other waters expected to result from the NWP activity, in acres, linear feet, or other appropriate unit of measure; a description of any proposed mitigation measures intended to reduce the adverse

environmental effects caused by the proposed activity; and any other NWP(s), regional general permit(s), or individual permit(s) used or intended to be used to authorize any part of the proposed project or any related activity, including other separate and distant crossings for linear projects that require Department of the Army authorization but do not require pre-construction notification. The description of the proposed activity and any proposed mitigation measures should be sufficiently detailed to allow the district engineer to determine that the adverse environmental effects of the activity will be no more than minimal and to determine the need for compensatory mitigation or other mitigation measures. For single and complete linear projects, the PCN must include the quantity of anticipated losses of wetlands, other special aquatic sites, and other waters for each single and complete crossing of those wetlands, other special aquatic sites, and other waters. Sketches should be provided when necessary to show that the activity complies with the terms of the NWP. (Sketches usually clarify the activity and when provided results in a quicker decision. Sketches should contain sufficient detail to provide an illustrative description of the proposed activity (e.g., a conceptual plan), but do not need to be detailed engineering plans);

(5) The PCN must include a delineation of wetlands, other special aquatic sites, and other waters, such as lakes and ponds, and perennial, intermittent, and ephemeral streams, on the project site. Wetland delineations must be prepared in accordance with the current method required by the Corps. The permittee may ask the Corps to delineate the special aquatic sites and other waters on the project site, but there may be a delay if the Corps does the delineation, especially if the project site is large or contains many wetlands, other special aquatic sites, and other waters. Furthermore, the 45 day period will not start until the delineation has been submitted to or completed by the Corps, as appropriate;

(6) If the proposed activity will result in the loss of greater than 1/10-acre of wetlands and a PCN is required, the prospective permittee must submit a statement describing how the mitigation requirement will be satisfied, or explaining why the adverse environmental effects are no more than minimal and why compensatory mitigation should not be required. As an alternative, the prospective permittee may submit a conceptual or detailed mitigation plan.

(7) For non-Federal permittees, if any listed species or designated critical habitat might be affected or is in the vicinity of the activity, or if the activity is located in designated critical habitat, the PCN must include the name(s) of those endangered or threatened species that might be affected by the proposed activity or utilize the designated critical habitat that might be affected by the proposed activity. For NWP activities that require pre-construction notification, Federal permittees must provide documentation demonstrating compliance with the Endangered Species Act;

(8) For non-Federal permittees, if the NWP activity might have the potential to cause effects to a historic property listed on, determined to be eligible for listing on, or potentially eligible for listing on, the National Register of Historic Places, the PCN must state which historic property might have the potential to be affected by the proposed activity or include a vicinity map indicating the location of the historic property. For NWP activities that require pre-construction notification, Federal permittees must provide documentation demonstrating compliance with section 106 of the National Historic Preservation Act;

(9) For an activity that will occur in a component of the National Wild and Scenic River System, or in a river officially designated by Congress as a “study river” for possible inclusion in the system while the river is in an official study status, the PCN must identify the Wild and Scenic River or the “study river” (see general condition 16); and

(10) For an activity that requires permission from the Corps pursuant to 33 U.S.C. 408 because it will alter or temporarily or permanently occupy or use a U.S. Army Corps of Engineers federally authorized civil works project, the pre-construction notification must include a statement confirming that the project proponent has submitted a written request for section 408 permission from the Corps office having jurisdiction over that USACE project.

(c) Form of Pre-Construction Notification: The standard individual permit application form (Form ENG 4345) may be used, but the completed application form must clearly indicate that it is an NWP PCN and must include all of the applicable information required in paragraphs (b)(1) through (10) of this general condition. A letter containing the required information may also be used. Applicants may provide electronic files of PCNs and supporting materials if the district engineer has established tools and procedures for electronic submittals.

(d) Agency Coordination: (1) The district engineer will consider any comments from Federal and state agencies concerning the proposed activity's compliance with the terms and conditions of the NWPs and the need for mitigation to reduce the activity's adverse environmental effects so that they are no more than minimal.

(2) Agency coordination is required for: (i) all NWP activities that require pre-construction notification and result in the loss of greater than 1/2-acre of waters of the United States; (ii) NWP 21, 29, 39, 40, 42, 43, 44, 50, 51, and 52 activities that require pre-construction notification and will result in the loss of greater than 300 linear feet of stream bed; (iii) NWP 13 activities in excess of 500 linear feet, fills greater than one cubic yard per running foot, or involve discharges of dredged or fill material into special aquatic sites; and (iv) NWP 54 activities in excess of 500 linear feet, or that extend into the waterbody more than 30 feet from the mean low water line in tidal waters or the ordinary high water mark in the Great Lakes.

(3) When agency coordination is required, the district engineer will immediately provide (e.g., via e-mail, facsimile transmission, overnight mail, or other expeditious manner) a copy of the complete PCN to the appropriate Federal or state offices (FWS, state natural resource or water quality agency, EPA, and, if appropriate, the NMFS). With the exception of NWP 37, these agencies will have 10 calendar days from the date the material is transmitted to notify the district engineer via telephone, facsimile transmission, or e-mail that they intend to provide substantive, site-specific comments. The comments must explain why the agency believes the adverse environmental effects will be more than minimal. If so contacted by an agency, the district engineer will wait an additional 15 calendar days before making a decision on the pre-construction notification. The district engineer will fully consider agency comments received within the specified time frame concerning the proposed activity's compliance with the terms and conditions of the NWPs, including the need for mitigation to ensure the net adverse environmental effects of the proposed activity are no more than minimal. The district engineer will provide no response to the resource agency, except as provided below. The district engineer will indicate in the administrative record associated with each pre-construction notification that the resource agencies' concerns were considered. For NWP 37, the emergency watershed protection and rehabilitation activity may proceed immediately in cases where there is an unacceptable hazard to life or a significant loss of property or economic hardship will occur. The district engineer will consider any comments received to decide whether the NWP 37 authorization should be modified, suspended, or revoked in accordance with the procedures at 33 CFR 330.5.

(4) In cases of where the prospective permittee is not a Federal agency, the district engineer will provide a response to NMFS within 30 calendar days of receipt of any Essential Fish Habitat conservation

recommendations, as required by section 305(b)(4)(B) of the Magnuson-Stevens Fishery Conservation and Management Act.

(5) Applicants are encouraged to provide the Corps with either electronic files or multiple copies of pre-construction notifications to expedite agency coordination.

3. Regional Conditions for the Los Angeles District:

1. For all activities in waters of the U.S. that are suitable habitat for federally listed fish species, including designated critical habitat for such species, the permittee shall design all new or substantially reconstructed linear transportation crossings (e.g. roads, highways, railways, trails, bridges, culverts) to ensure that the passage and/or spawning of fish is not hindered. In these areas, the permittee shall employ bridge designs that span the stream or river, including pier- or pile-supported spans, or designs that use a bottomless arch culvert with a natural stream bed, unless determined to be impracticable by the Corps.

2. Nationwide Permits (NWP) 3, 7, 12-15, 17-19, 21, 23, 25, 29, 35, 36, or 39-46, 48-54 cannot be used to authorize structures, work, and/or the discharge of dredged or fill material that would result in the "loss" of wetlands, mudflats, vegetated shallows or riffle and pool complexes as defined at 40 CFR Part 230.40-45. The definition of "loss" for this regional condition is the same as the definition of "loss of waters of the United States" used for the Nationwide Permit Program. Furthermore, this regional condition applies only within the State of Arizona and within the Mojave and Sonoran (Colorado) desert regions of California. The desert regions in California are limited to four USGS Hydrologic Unit Code (HUC) accounting units (Lower Colorado -150301, Northern Mojave-180902, Southern Mojave-181001, and Salton Sea-181002).

3. When a pre-construction notification (PCN) is required, the Los Angeles District shall be notified in accordance with General Condition 32 using either the South Pacific Division PCN Checklist or a signed application form (ENG Form 4345) with an attachment providing information on compliance with all of the General and Regional Conditions. The PCN Checklist and application form are available at: http://www.spl.usace.army.mil/Missions/Regulatory/PermitProcess.aspx. In addition, unless specifically waived by the Los Angeles District, the PCN shall include:

    a. A written statement describing how the activity has been designed to avoid and minimize adverse effects, both temporary and permanent, to waters of the United States;

    b. Drawings, including plan and cross-section views, clearly depicting the location, size and dimensions of the proposed activity as well as the location of delineated waters of the U.S. on the site. The drawings shall contain a title block, legend and scale, amount (in cubic yards) and area (in acres) of fill in Corps jurisdiction, including both permanent and temporary fills/structures. The ordinary high water mark or, if tidal waters, the mean high water mark and high tide line, should be shown (in feet), based on National Geodetic Vertical Datum (NGVD) or other appropriate referenced elevation. All drawings shall follow the Updated Map and Drawing Standards for the South Pacific Division Regulatory Program (Feb 2016), or most recent update (available at the South Pacific Division website at: http://www.spd.usace.army.mil/Missions/Regulatory/PublicNoticesandReferences.aspx/);

c. Numbered and dated pre-project color photographs showing a representative sample of waters proposed to be impacted on the project site, and all waters proposed to be avoided on and immediately adjacent to the project site. The compass angle and position of each photograph shall be documented on the plan-view drawing required in subpart b of this regional condition.

d. Delineation of aquatic resources in accordance with the current Los Angeles District's Minimum Standards for Acceptance of Aquatic Resources Delineation Reports (available at: http://www.spl.usace.army.mil/Missions/Regulatory/Jurisdictional-Determination/).

4. Submission of a PCN pursuant to General Condition 32 and Regional Condition 3 shall be required for specific regulated activities in the following locations:

a. All perennial waterbodies and special aquatic sites throughout the Los Angeles District as well as intermittent waters within the State of Arizona for any regulated activity that would result in a loss of waters of the United States. The definition of "loss of waters of the United States" for this regional condition is the same as the definition used for the Nationwide Permit Program.

b. All areas designated as Essential Fish Habitat (EFH) by the Pacific Fishery Management Council, and that would result in an adverse effect to EFH, in which case the PCN shall include an EFH assessment and extent of proposed impacts to EFH. EFH Assessment Guidance and other supporting information can be found at: http://www.westcoast.fisheries.noaa.gov/habitat/fish_habitat/efh_consultations_go.html.

c. All watersheds in the Santa Monica Mountains in Los Angeles and Ventura counties bounded by Calleguas Creek on the west, by Highway 101 on the north and east, and by Sunset Boulevard and Pacific Ocean on the south.

d. The Santa Clara River watershed in Los Angeles and Ventura counties, including but not limited to Aliso Canyon, Agua Dulce Canyon, Sand Canyon, Bouquet Canyon, Mint Canyon, South Fork of the Santa Clara River, San Francisquito Canyon, Castaic Creek, Piru Creek, Sespe Creek and the main-stem of the Santa Clara River.

e. The Murrieta and Temecula Creek watersheds in Riverside County, California for any regulated activity that would result in a loss of waters of the U.S. The definition of "loss of waters of the United States" for this regional condition is the same as the definition used for the Nationwide Permit Program.

f. All waterbodies designated by the Arizona Department of Environmental Quality as Outstanding Arizona Waters (OAWs), within 1600 meters (or 1 mile) upstream and/or 800 meters (1/2 mile) downstream of a designated OAW, and on tributaries to OAWs within 1600 meters of the OAW (see http://www.azdeq.gov/index.html).

g. All waterbodies designated by the Arizona Department of Environmental Quality as 303(d)-impaired surface waters, within 1600 meters (or 1 mile) upstream and/or 800 meters (1/2 mile) downstream of a designated impaired surface water, and on tributaries to impaired waters within 1600 meters of the impaired water (see http://www.azdeq.gov/index.html).

5. Individual Permits shall be required for all discharges of fill material in jurisdictional vernal pools, with the exception that discharges for the purpose of restoration, enhancement, management or scientific study of vernal pools may be authorized under NWPs 5, 6, and 27 with the submission of a PCN in accordance with General Condition 32 and Regional Condition 3.

6. Within the Murrieta Creek and Temecula Creek watersheds in Riverside County the use of NWPs 29, 39, 42 and 43, and NWP 14 combined with any of those NWPs shall be restricted. The loss of waters of the U.S. cannot exceed 0.25 acre. The definition of "loss of waters of the United States" for this regional condition is the same as the definition used for the Nationwide Permit Program.

7. Individual Permits (Standard Individual Permit or 404 Letter of Permission) shall be required in San Luis Obispo Creek and Santa Rosa Creek in San Luis Obispo County for bank stabilization projects, and in Gaviota Creek, Mission Creek and Carpinteria Creek in Santa Barbara County for bank stabilization projects and grade control structures.

8. In conjunction with the Los Angeles District's Special Area Management Plans (SAMPs) for the San Diego Creek Watershed and San Juan Creek/Western San Mateo Creek Watersheds in Orange County, California, the Corps' Division Engineer, through his discretionary authority has revoked the use of the following 26 selected NWPs within these SAMP watersheds: 03, 07, 12, 13, 14, 16, 17, 18, 19, 21, 25, 27, 29, 31, 33, 39, 40, 41, 42, 43, 44, 46, 49, and 50. Consequently, these NWPs are no longer available in those watersheds to authorize impacts to waters of the United States from discharges of dredged or fill material under the Corps' Clean Water Act section 404 authority.

9. Any requests to waive the applicable linear foot limitations for NWPs 13, 21, 29, 39, 40 and 42, 43, 44, 51, 52, and 54, must include the following:

   a. A narrative description of the affected aquatic resource. This should include known information on: volume and duration of flow; the approximate length, width, and depth of the waterbody and characters observed associated with an Ordinary High Water Mark (e.g. bed and bank, wrack line, or scour marks) or Mean High Water Line; a description of the adjacent vegetation community and a statement regarding the wetland status of the associated vegetation community (i.e. wetland, non-wetland); surrounding land use; water quality; issues related to cumulative impacts in the watershed, and; any other relevant information.
   b. An analysis of the proposed impacts to the waterbody in accordance with General Condition 32 and Regional Condition 3;

   c. Measures taken to avoid and minimize losses, including other methods of constructing the proposed project; and

   d. A compensatory mitigation plan describing how the unavoidable losses are proposed to be compensated, in accordance with 33 CFR Part 332.

10. The permittee shall complete the construction of any compensatory mitigation required by special condition(s) of the NWP verification before or concurrent with commencement of construction of the authorized activity, except when specifically determined to be impracticable by the Corps. When mitigation involves use of a mitigation bank or in-lieu fee program, the permittee shall submit proof of payment to the Corps prior to commencement of construction of the authorized activity.

4. Further information:

1. Congressional Authorities: You have been authorized to undertake the activity described above pursuant to:
   (x) Section 10 of the Rivers and Harbors Act of 1899 (33 U.S.C. 403).
   ( ) Section 404 of the Clean Water Act (33 U.S.C. 1344).
   ( ) Section 103 of the Marine Protection, Research and Sanctuaries Act of 1972 (33 U.S.C. 1413).

2. Limits of this authorization.
   (a) This permit does not obviate the need to obtain other Federal, state, or local authorizations required by law.
   (b) This permit does not grant any property rights or exclusive privileges.
   (c) This permit does not authorize any injury to the property or rights of others.
   (d) This permit does not authorize interference with any existing or proposed Federal project.

3. Limits of Federal Liability. In issuing this permit, the Federal Government does not assume any liability for the following:
   (a) Damages to the permitted project or uses thereof as a result of other permitted or unpermitted activities or from natural causes.
   (b) Damages to the permitted project or uses thereof as a result of current or future activities undertaken by or on behalf of the United States in the public interest.
   (c) Damages to persons, property, or to other permitted or unpermitted activities or structures caused by the activity authorized by this permit.
   (d) Design or construction deficiencies associated with the permitted work.
   (e) Damage claims associated with any future modification, suspension, or revocation of this permit.

4. Reliance on Applicant's Data: The determination of this office that issuance of this permit is not contrary to the public interest was made in reliance on the information you provided.

5. Reevaluation of Permit Decision. This office may reevaluate its decision on this permit at any time the circumstances warrant. Circumstances that could require a reevaluation include, but are not limited to, the following:
   (a) You fail to comply with the terms and conditions of this permit.
   (b) The information provided by you in support of your permit application proves to have been false, incomplete, or inaccurate (See 4 above).
   (c) Significant new information surfaces which this office did not consider in reaching the original public interest decision.

   Such a reevaluation may result in a determination that it is appropriate to use the suspension, modification, and revocation procedures contained in 33 CFR 330.5 or enforcement procedures such as those contained in 33 CFR 326.4 and 326.5. The referenced enforcement procedures provide for the

issuance of an administrative order requiring you to comply with the terms and conditions of your permit and for the initiation of legal action where appropriate. You will be required to pay for any corrective measure ordered by this office, and if you fail to comply with such directive, this office may in certain situations (such as those specified in 33 CFR 209.170) accomplish the corrective measures by contract or otherwise and bill you for the cost.

6. This letter of verification is valid for a period not to exceed two years unless the nationwide permit is modified, reissued, revoked, or expires before that time.

7. You must maintain the activity authorized by this permit in good condition and in conformance with the terms and conditions of this permit. You are not relieved of this requirement if you abandon the permitted activity, although you may make a good faith transfer to a third party in compliance with General Condition H below. Should you wish to cease to maintain the authorized activity or should you desire to abandon it without a good faith transfer, you must obtain a modification of this permit from this office, which may require restoration of the area.

8. You must allow representatives from this office to inspect the authorized activity at any time deemed necessary to ensure that it is being or has been accomplished with the terms and conditions of your permit.

APPENDIX N

CDFG 1600-2019-0252-R6 AGREEMENT (60MB)

DocuSign Envelope ID: E2B645EE-32E1-44DF-8F2D-5481D6406260

CALIFORNIA DEPARTMENT OF FISH AND WILDLIFE
INLAND DESERTS REGION
3602 INLAND EMPIRE BLVD., SUITE C-220
ONTARIO, CA 91764

STREAMBED ALTERATION AGREEMENT
NOTIFICATION NO. 1600-2019-0252-R6

CITY OF MORENO VALLEY
SR 60/ MORENO BEACH DRIVE INTERCHANGE IMPROVEMENT PROJECT

This Streambed Alteration Agreement (Agreement) is entered into between the California Department of Fish and Wildlife (CDFW) and City of Moreno Valley (Permittee) or as represented by Margery Lazarus.

RECITALS

WHEREAS, pursuant to Fish and Game Code section 1602, Permittee notified CDFW on October 29, 2019 that Permittee intends to complete the project described herein.

WHEREAS, pursuant to Fish and Game Code section 1603, CDFW has determined that the project could substantially adversely affect existing fish or wildlife resources and has included measures in the Agreement necessary to protect those resources.

WHEREAS, Permittee has reviewed the Agreement and accepts its terms and conditions, including the measures to protect fish and wildlife resources.

NOW THEREFORE, Permittee agrees to complete the project in accordance with the Agreement.

PROJECT LOCATION

The SR 60/ Moreno Beach Drive Interchange Improvement Project (Project) is located at the intersection of State Route 60 and Moreno Beach Drive, in the City of Moreno Valley, in the County of Riverside, State of California; Latitude 33.93482°, Longitude -117. 15408°; on the U.S. Geological Survey (USGS) Sunnymead 7.5 minute series quadrangle topographic map.

PROJECT DESCRIPTION

The Project proposes to provide a westbound off ramp to Moreno Beach Drive, north of SR-60. Also, at Moreno Beach Drive a loop onramp with auxiliary lane for northbound traffic and a direct onramp for southbound traffic are proposed for vehicles to complete the southbound to westbound SR-60 movement. The existing two-lane bridge will be replaced with a new overcrossing. Currently, 3 ephemeral drainages transect the

DocuSign Envelope ID: E2B645EE-32E1-44DF-8F2D-5481D6406260

Project area. To complete the proposed Project, permanent grading and fill will occur in portions of “Drainage 2.3”, “Drainage 2.4” and “Drainage 3.2” (Exhibit 1)

PROJECT IMPACTS

Existing fish or wildlife resources the Project could substantially adversely affect include: AMPHIBIANS: Baja California tree frog (*Pseudacris hypochondriaca*), Western Spadefoot (*Scaphiopus hammondii*); BIRDS- Allen's Hummingbird (*Selasphorus sasin*), American Goldfinch (*Carduelis tristi*), American Kestrel (*Falco sparverius*), American Robin (*Turdus migratorius*), American Wigeon (*Mareca americana*), Anna’s Hummingbird (*Calypte anna*), Ash-throated Flycatcher (*Myiarchus cinerascens*), Barn Owl (*Tyto alba*), Barn Swallow (*Hirundo rustica*), Bewick’s Wren (*Thryomanes bewickii*), Black Phoebe (*Sayornis nigricans*), Black-chinned Hummingbird (*Archilochus alexandr*), Black-necked Stilt (*Himantopus mexicanus*), Brewer's Blackbird (*Euphagus cyanocephalus*), Bullock’s Oriole (*Icterus bullockii*), Burrowing Owl (*Athene cunicularia*), Bushtit (*Psaltriparus minimus*), California Towhee (*Melozone crissalis*), Cattle Egret (*Bubulcus ibis*), Chipping Sparrow (*Spizella passerina*), Common Yellowthroat (*Geothlypis trichas*), Cooper’s Hawk (*Accipiter cooperii*), Costa's Hummingbird (*Calypte costae*), Grasshopper Sparrow (*Ammodramus savannarum*), Great Egret (*Ardea alba*), Great Horned Owl (*Bubo virginianus*), Hooded Oriole (*Icterus cucullatus*), House Finch (*Haemorhous mexicanus*), House Wren (*Troglodytes aedon*), Hutton's Vireo (*Vireo huttoni*), Killdeer (*Charadrius vociferous*), Lark Sparrow (*Chondestes grammacus*), Lawrence's Goldfinch (*Carduelis lawrencei*), Least Bell’s Vireo (*Vireo bellii pusillus*), Lesser Goldfinch (*Carduelis psaltria*), Lincoln's Sparrow (*Melospiza lincolnii*), Mallard (*Anas platyrhynchos*), Marsh Wren (*Cistothorus palustris*), Northern Flicker (*Colaptes auratus*), Northern Mockingbird (Mimus polyglottos), Northern Rough- winged Swallow (Steligopteryx serripennis), Orange-crowned Warbler (*Oreothypis celata*), Red-shouldered Hawk (Buteo lineatus), Red-tailed Hawk (*Buteo jamaicensis*), Red-winged Blackbird (*Agelaius phoeniceus*), Rufous Hummingbird (*Selasphorus rufus*), Say’s Phoebe (*Sayornis saya*), Snowy Egret (*Egretta thula*), Song Sparrow (*Melospiza melodia*), Sora (*Porzana carolina*), Southern California Rufous-crowned Sparrow (*Aimophila ruficeps canescens*), Spotted Towhee (*Pipilo maculatus*), Swainson's Thrush (*Catharus ustulatus*), Townsend's Warbler (*Setophaga townsendi*), Tree Swallow (*Tachycineta bicolor*), Turkey Vulture (*Cathartes aura*), Violet-green Swallow (*Tachycineta thalassina*), Western Meadowlark (*Sturnella neglecta*), White-throated Swift (*Aeronautes saxatalis*), Wilson's Warbler (*Cardellina pusilla*), Wrentit (*Chamaea fasciata*), Yellow-rumped Warbler (*Setophaga coronate),* Yellow Warbler (*Setophaga petechia*); MAMMALS- Bobcat (*Lynx rufus*), Botta’s pocket gopher *(Thomomys bottae),* California ground squirrel *(Spermophilus beecheyi)*, Coyote (*Canis latrans*), Desert cottontail (*Sylvilagus audubonii)* Southern grasshopper mouse (*Onychomys torridus*), San Diego black- tailed jackrabbit (*Lepus californicus bennettii*); REPTILES- California legless lizard (*Anniella pulchra*), two-striped garter snake (*Thamnophis hammondii*), Coachwhip (*Masticophis flagellum*), Pacific Gopher Snake (*Pituophis melanleucus catenifer*), Red-diamond Rattlesnake (*Crotalus ruber*), Rosy Boa (*Lichanura trivirgata*), side-blotched lizard (*Uta stansburiana*), and Western whiptail (*Cnemidophorus tigris*).

DocuSign Envelope ID: E2B645EE-32E1-44DF-8F2D-5481D6406260

The adverse effects the Project could have on the fish or wildlife resources identified above include: the disturbance to, alteration of, and/or loss of nesting, roosting, and foraging habitat; the reduction or loss of habitat coverage, composition, and distribution; the disturbance to and alteration of wildlife movement corridors; and temporary impacts to water quality. The Project will permanently impact a total of 1.19 acres of fish and wildlife resources subject to Fish and Game Code section 1600 et seq; total Project impacts of 1.19 acres to fish and wildlife resources subject to Fish and Game Code section 1600 et seq. are authorized under this Agreement.

MEASURES TO PROTECT FISH AND WILDLIFE RESOURCES

1 Administrative Measures

Permittee shall meet each administrative requirement described below.

1.1 Documentation at Project Site. Permittee shall make the Agreement, any extensions and amendments to the Agreement, and all related notification materials and California Environmental Quality Act (CEQA) documents, readily available at the Project site at all times and shall be presented to CDFW personnel, or personnel from another state, federal, or local agency upon request.

1.2 Providing Agreement to Persons at Project Site. Permittee shall provide copies of the Agreement and any extensions and amendments to the Agreement to all persons who will be working on the Project at the Project site on behalf of Permittee, including but not limited to contractors, subcontractors, inspectors, and monitors.

1.3 Notification of Conflicting Provisions. Permittee shall notify CDFW if Permittee determines or learns that a provision in the Agreement might conflict with a provision imposed on the Project by another local, state, or federal agency. In that event, CDFW shall contact Permittee to resolve any conflict.

1.4 Project Site Entry. Permittee agrees that CDFW personnel may enter the Project site at any time to verify compliance with the Agreement.

1.5 Take of Listed Species. The issuance of this Agreement does not authorize the take of any state- or federally-listed threatened, endangered, or fully protected species. Take of any California Endangered Species Act (CESA)-listed species is prohibited except as authorized by state law (Fish and Game Code, §§ 2080 & 2085). Consequently, if a Project, including Project construction or any Project-related activity during the life of the Project, results in take of CESA-listed species, the Department recommends that the Project proponent seek appropriate authorization prior to Project implementation. This may include an incidental take permit (ITP) or a consistency determination (Fish and Game Code, §§ 2080.1 & 2081).

DocuSign Envelope ID: E2B645EE-32E1-44DF-8F2D-5481D6406260

1.6 Take of Nesting Birds. Fish and Game Code section 3503 makes it unlawful to take, possess, or needlessly destroy the nest or eggs of any bird, except as otherwise provided by Fish and Game Code or any regulation made pursuant thereto. Fish and Game Code section 3503.5 makes it unlawful to take, possess, or destroy any birds in the orders Falconiformes or Strigiformes (birds-of-prey) to take, possess, or destroy the nest or eggs of any such bird except as otherwise provided by Fish and Game Code or any regulation adopted pursuant thereto. Fish and Game Code Section 3513 makes it unlawful to take or possess any migratory nongame bird except as provided by the rules and regulations adopted by the Secretary of the Interior under provisions of the Migratory Bird Treaty Act 1918, as amended (16 U.S.C. § 703 et seq.). The issuance of this Agreement does not in any way exempt or excuse compliance with these statutes.

1.7 Additional Project Impacts. Permittee shall submit to CDFW a request to amend this Agreement if any additional impacts to Fish and Game Code section 1602 resources, or additional operations and maintenance activities not identified in this Agreement are anticipated. No additional impacts to Fish and Game Code section 1602 resources are authorized unless the impacts and/or activities are expressly authorized by CDFW by amendment to this Agreement.

2 Avoidance and Minimization Measures

To avoid or minimize adverse impacts to fish and wildlife resources identified above, Permittee shall implement each measure listed below.

2.1 Designated Biologist. Permittee shall submit to CDFW for review and approval the names, qualifications, business addresses, and contact information of any qualified biologists (Designated Biologists) that will be utilized to conduct species/habitat surveys, biological monitoring, or mitigation planning and implementation activities at least 30 days before initiating ground- or vegetation- disturbing activities. Permittee shall specify the proposed responsibilities of each Designated Biologist and provide clear evidence that the Designated Biologist is knowledgeable, experienced, and capable of performing those proposed duties.

2.2 Responsibility of the Designated Biologist. The Designated Biologist(s) shall be responsible for monitoring activities addressed by this Agreement, including, but not limited to all activities that result in clearing, grading, drilling, and/or other ground-disturbing activities. To ensure compliance with the measures of this Agreement, the Designated Biologist(s) shall confirm and monitor the limits of Project activities addressed by this Agreement.

2.3 Authority of Designated Biologists. To ensure compliance with the measures of this Agreement, the Designated Biologists shall have the authority to immediately halt any activity that does not comply with this Agreement, order any reasonable measure to avoid the violation of any measure of this Agreement, and directly contact CDFW for any reason. If the Designated Biologist(s) determines that the

DocuSign Envelope ID: E2B645EE-32E1-44DF-8F2D-5481D6406260

Project may have an adverse effect on any special-status species (threatened, endangered, candidate, species of special concern, etc.), they must halt construction and notify the appropriate agencies immediately. Unless authorized by CDFW, the Designated Biologists shall not have the authority to handle any special-status species (threatened, endangered, candidate, species of special concern, etc.).

2.4 Delineate Work Area Boundary (See Exhibit 1). In consultation with the Designated Biologist, Permittee shall clearly delineate the outer perimeter of the work areas and access routes with appropriate fencing, signage, and/or flagging to prevent damage to adjacent habitats. The delineation materials shall be in place during all periods of operation and all persons employed or otherwise working on the Project site shall be instructed about the restrictions. Permittee shall ensure the delineation materials are monitored daily, and maintained, repaired, or replaced immediately if the materials are damaged, lost, stolen, or become ineffective in any way. The Designated Biologist(s) shall ensure the delineation materials do not create a barrier to wildlife movement and will not pose a risk to wildlife safety.

2.5 Environmentally Sensitive Areas. The Designated Biologist shall determine and clearly delineate any necessary avoidance and/or buffer areas with appropriate fencing, signage, and/or flagging. The delineation materials shall be visibly discernable from the 'standard work area boundary' materials and all persons employed or otherwise working on the Project site shall be instructed about the restrictions associated with these environmentally sensitive areas. Permittee shall ensure the delineation materials are monitored daily, and maintained, repaired, or replaced immediately if the materials are damaged, lost, stolen, or become ineffective in any way. The Designated Biologist(s) shall ensure the delineation materials do not create a barrier to wildlife movement and will not pose a risk to wildlife safety.

2.6 Educational Program. Permittee shall conduct an Education Program for all persons employed or otherwise working on the Project prior to performing any work on site. The program shall consist of a presentation from a Designated Biologist that includes a discussion of the biology of the habitats and species identified in this Agreement and present at this site. The Designated Biologist shall also include as part of the education program information about the distribution and habitat needs of any Protected Species that may be present, legal protections for those species, penalties for violations and Project-specific protective measures included in this Agreement. Interpretation shall be provided for non-English speaking workers, and the same instruction shall be provided for any new workers prior to their performing work on site. The Permittee shall prepare and distribute wallet-sized cards or a fact sheet that contains this information for workers to carry on site. Upon completion of the education program, employees shall sign a form stating they attended the program and understand all protection measures. These forms shall be filed at the worksite offices and be available to CDFW upon request. The Education Program shall be repeated annually for part of the Project extending

DocuSign Envelope ID: E2B645EE-32E1-44DF-8F2D-5481D6406260

more than one (1) year. Copies of program materials shall be maintained at the Project site for workers to reference as needed.

2.6.1 Invasive Species Education Program. Permittee shall include an invasive species Education Program for all persons working on the Project prior to the performing any work on site. The program shall consist of a presentation from a Designated Biologist that includes a discussion of the invasive species currently present within the Project site as well as those that may pose a threat to or have the potential to invade the Project site. The discussion shall include a physical description of each species and information regarding their habitat preferences, local and statewide distribution, modes of dispersal, and impacts. The program shall also include a discussion of BMPs to be implemented at the Project site to avoid the introduction and spread of invasive species into and out of the Project site.

2.7 Nesting Birds. It is the Permittee's responsibility to avoid impacts to nesting birds. Permittee shall ensure that impacts to nesting birds are avoided through the implementation of preconstruction surveys, ongoing monitoring, and if necessary, establishment of minimization measures.

2.7.1 Designated Avian Biologist. The Permittee shall designate a biologist with the following experience: identifying local and migratory bird species; conducting bird surveys using appropriate survey methodology (e.g., Ralph et al. 1993[1] and United States Fish and Wildlife Service and/or CDFW-accepted species-specific survey protocols, available here: https://www.wildlife.ca.gov/conservation/survey-protocols); nesting surveying techniques, recognizing breeding and nesting behaviors, locating nests and breeding territories, and identifying nesting stages and nest success (e.g., Martin and Geupel 1993[2]); determining/establishing appropriate avoidance and minimization measures; and monitoring the efficacy of implemented avoidance and minimization measures.

2.7.2 Pre-construction Surveys. Surveys shall be conducted by the Designated Avian Biologist at the appropriate time of day/night, during appropriate weather conditions, between three (3) and seven (7) days prior to the initiation of Project activities addressed by this Agreement. Surveys shall encompass all suitable areas including trees, shrubs, bare ground, burrows, cavities, and structures. Survey duration shall take into consideration the size of area subject to this Agreement; density, and complexity of the habitat; number of survey participants; survey

[1] Ralph, C.J., G.R. Geupel, P. Pyle, T.E. Martin, and D.F. DeSanta. 1993. Handbook of field methods for monitoring landbirds. General Technical Report PSW-GTR 144. USDA Forest Service Pacific Southwest Research Station. Albany, CA.

[2] Martin, T.E. and G.R. Geupel. 1993. Nest-monitoring plots: methods for locating nests and monitoring success. Journal of Field Ornithology 64:507-514.

DocuSign Envelope ID: E2B645EE-32E1-44DF-8F2D-5481D6406260

techniques employed; and shall be sufficient to ensure the data collected is complete and accurate. Pre-construction surveys shall focus on both direct and indirect evidence of nesting, including nest locations and nesting behavior (e.g., copulation, carrying of food or nest materials, nest building, removal of fecal sacks, flushing suddenly from atypically close range, agitation, aggressive interactions, feigning injury or distraction displays, or other behaviors). If a nest is suspected, but not confirmed, the Designated Avian Biologist shall establish a disturbance-free buffer until additional surveys can be completed, or until the location can be inferred based on observations. The Designated Avian Biologist shall not risk failure of the nest to determine the exact location or status and will make every effort to limit the nest to potential predation as a result of the survey/monitoring efforts (e.g., limit number of surveyors, limit time spent at/near the nest, scan the site for potential nest predators before approaching, immediately depart nest area if indicators of stress or agitation are displayed). If a nest is observed, but thought to be inactive, the Designated Avian Biologist shall monitor the nest for one hour (four hours for raptors during the non-breeding season) prior to approaching the nest to determine status. The Designated Avian Biologist shall use their best professional judgement regarding the monitoring period and whether approaching the nest is appropriate. Results of pre-construction surveys shall be provided to CDFW at least one business day prior to commencement of Project activities, as identified in Measure 4.2. Results of ongoing monitoring surveys shall be provided to CDFW upon request.

2.7.3 Buffers. When an active nest is confirmed, the Designated Avian Biologist shall immediately establish a conservative buffer surrounding the nest based on their best professional judgement and experience. The buffer shall be delineated to ensure that its location is known by all persons working within the vicinity but shall not be marked in such a manner that it attracts predators. Once the buffer is established, the Designated Avian Biologist shall document baseline behavior, stage of reproduction, and existing site conditions, including vertical and horizontal distances from proposed work areas, visual or acoustic barriers, and existing level of disturbance. The Designated Avian Biologist shall monitor the nest at the onset of Project activities addressed by this Agreement, and at the onset of any changes in Project activities (e.g., increase in number or type of equipment, change in equipment usage, etc.) to determine the efficacy of the buffer. If the Designated Avian Biologist determines that Project activities may be causing an adverse reaction, the Designated Avian Biologist shall adjust the buffer accordingly.

2.7.4 Ongoing Monitoring. The Designated Avian Biologist shall be onsite daily to monitor all existing nests, the efficacy of established buffers, and to document any new nesting occurrences. The Designated Avian Biologist

DocuSign Envelope ID: E2B645EE-32E1-44DF-8F2D-5481D6406260

shall document the status of all existing nests, including the stage of reproduction and the expected fledge date. If a nest is suspected to have been abandoned or failed, the Designated Avian Biologist shall monitor the nest for a minimum of one hour (four hours for raptors), uninterrupted, during favorable field conditions. If no activity is observed during that time, the Designated Avian Biologist may approach the nest to assess the status.

2.7.5 Securing Site. The Permittee, under the direction of the Designated Avian Biologist, may also take steps to discourage nesting on the Project site, including moving equipment and materials daily, covering material with tarps or fabric, and securing all open pipes and construction materials. The Designated Avian Biologist shall ensure that none of the deterrent materials pose an entanglement risk to birds or other species. The Designated Avian Biologist(s) shall include a detailed account of any steps taken to discourage nesting within the Project site in the summary reports.

2.7.6 Reporting. The Designated Avian Biologist shall be responsible for providing summary reports, as specified in Measure 4.3, where relevant, to CDFW no less than once weekly regarding the nesting species identified onsite, discovery of any of new nests, the status/outcome of any previously identified nest, buffer distances established for each nest, and any adjustments made to established buffers. If Project activities result in the abandonment of, or damage to a nest, Permittee shall notify CDFW within 24 hours of detection.

2.8 Biological Monitoring. The Designated Biologist(s) shall be onsite daily, while Project activities are occurring and shall be responsible for monitoring all Project activities that have the potential to impact fish and wildlife resources subject to Fish and Game Code section 1600 et seq., including streams, associated vegetation/habitat, and wildlife. The Designated Biologist(s) shall ensure that all avoidance and minimization measures are implemented and maintained, including, but not limited to: determining and delineating appropriate avoidance and buffer areas, maintaining delineated access routes and work areas, monitoring for the presence of, and potential impacts to, special-status species, and maintaining/repairing/replacing any exclusionary fencing and trench/excavation covers.

2.9 Best Management Practices. Permittee shall actively implement Best Management Practices (BMPs) to prevent erosion and the discharge of sediment and pollutants during Project activities. BMPs shall be monitored and repaired if necessary to ensure maximum erosion, sediment, and pollution control. Permittee shall prohibit the use of erosion control materials potentially harmful to fish and wildlife species, such as mono-filament netting (erosion control matting) or similar material. All fiber rolls, straw wattles, and/or hay bales utilized within and adjacent to the Project site shall be free of nonnative plant materials. Fiber rolls or erosion control mesh shall

DocuSign Envelope ID: E2B645EE-32E1-44DF-8F2D-5481D6406260

be made of loose-weave mesh that is not fused at the intersections of the weave, such as jute, or coconut (coir) fiber, or other products without welded weaves. Non-welded weaves reduce entanglement risks to wildlife by allowing animals to push through the weave, which expands when spread. Permittee shall ensure BMPs do not pose a barrier to wildlife movement and shall be installed to allow for the safe passage of wildlife movement, particularly of less vagile species (such as small mammals and reptiles), out of the Project area. Long, continuous lengths of silt-fencing or other BMP materials installed without gaps can create a barrier to wildlife movement, trapping wildlife within the Project area. Areas of safe passage can be easily accommodated by leaving small gaps between parallel and overlapping lengths of BMPs.

2.10 Surface Water Diversion. In the event vehicles/equipment are to be driven/operated within the reservoir/stream when surface water inflow is present, the entire surface water flow shall be diverted around the work area. The Permittee shall notify CDFW of its intent to access the stream and implement the diversion plan submitted as part of the notification. Construction of the barrier and/or the new channel shall normally begin in the downstream area and continue in an upstream direction, and the flow shall be diverted only when construction of the diversion is completed. Channel bank or barrier construction shall be adequate to prevent seepage into or from the work area. The enclosure and the supportive material shall be removed when the work is completed, and removal shall normally proceed from downstream in an upstream direction.

2.11 Temporary Dam. Any temporary dam or other artificial obstruction for Surface Water Diversion shall be built pursuant to FGC Section 5937, and only from materials such as clean gravel, which will cause little or no siltation, and shall be approved by the CDFW prior to construction.

2.12 Equipment and Vehicles. Any equipment or vehicles driven and/or operated within or adjacent to the stream/lake shall be checked and maintained daily, to prevent leaks of materials that if introduced to water could be deleterious to aquatic life.

2.13 Stationary Equipment. Stationary equipment such as motors, pumps, generators, and welders, located within or adjacent to the stream/lake shall be positioned over drip pans. Stationary heavy equipment shall have suitable containment to handle a catastrophic spill/leak. Clean up equipment such as extra boom, absorbent pads, skimmers, shall be on site prior to the start of construction.

2.14 Staging and Storage Areas. Staging/storage areas for equipment and materials shall be located outside of the stream/lake. Any materials placed in seasonally dry portions of a stream or lake that could be washed downstream or could be deleterious to aquatic life shall be removed from the Project site prior to inundation by high flows.

DocuSign Envelope ID: E2B645EE-32E1-44DF-8F2D-5481D6406260

2.15 Equipment Maintenance. No equipment maintenance shall be done within or near any stream channel or lake margin where petroleum products or other pollutants from the equipment may enter these areas under any flow.

2.16 Trash Abatement and Refuse Removal. Permittee shall ensure that trash and food items are contained in animal-proof containers and removed at the end of each work day to avoid attracting opportunistic predators such as ravens, coyotes, and feral dogs. Upon completion of Project activities within each Project location, Permittee shall remove and properly dispose of all construction refuse, including, but not limited to, broken equipment parts, wrapping material, cords, cables, wire, rope, strapping, twine, buckets, metal or plastic containers, and boxes.

2.17 Pollution and Litter. Permittee shall comply with all litter and pollution laws. All contractors, subcontractors, and employees shall also obey these laws and it shall be the responsibility of Permittee to ensure compliance.

2.17.1 Spoil sites shall not be located within a lake, streambed, or flowing stream or locations that may be subjected to high storm flows, where spoil shall be washed back into a lake, streambed, or flowing stream where it will impact streambed habitat and aquatic or riparian vegetation.

2.17.2 Raw cement/concrete or washings thereof, asphalt, paint, or other coating material, oil or other petroleum products, or any other substances which could be hazardous to fish and wildlife resources resulting from Project related activities shall be prevented from contaminating the soil and/or entering the waters of the State. These materials, placed within or where they may enter a lake, streambed, or flowing stream by Permittee or any party working under contract or with the permission of Permittee, shall be removed immediately.

2.17.3 No broken concrete, cement, debris, soil, silt, sand, bark, slash, sawdust, rubbish, or washings thereof, oil or petroleum products, or other organic or earthen material from any construction or associated activity of whatever nature shall be allowed to enter into or be placed where it may be washed by rainfall or runoff into waters of the State. When operations are completed, any excess materials or debris shall be removed from the work area. No rubbish shall be deposited within 150 feet of the high water mark of any lake, streambed, or flowing stream.

2.17.4 No equipment maintenance shall be done within or near any lake, streambed, or flowing stream where petroleum products or other pollutants from the equipment may enter these areas under any flow.

2.18 Turbidity and Siltation. All equipment that enters the streambed or habitat associated with the stream shall be clean and dry. Upon CDFW determination that turbidity/siltation levels resulting from Project-related activities constitute a threat to

DocuSign Envelope ID: E2B645EE-32E1-44DF-8F2D-5481D6406260

aquatic life, activities associated with the turbidity/siltation shall be halted until effective CDFW approved control devices are installed, or abatement procedures are initiated.

2.19 Spill Containment. All activities performed in or near a stream shall have absorbent materials designated for spill containment and cleanup activities on-site for use in an accidental spill. If a spill occurs the Permittee shall immediately notify the California Emergency Management Agency at 1-800-852-7550 and immediately initiate the cleanup activities. CDFW shall also be notified by the Permittee and consulted regarding clean-up procedures.

2.20 Disposal of Vegetation. Following any vegetation clearing/removal activities, Permittee shall immediately chip woody debris to pieces 1-inch in diameter or less and dispose of the materials using one of the following methods: a) solarize with clear tarp, b) compost at a commercial facility, c) burn at a biogeneration facility, or d) send to a landfill (can be utilized as Alternative Daily Coverage). Plant material infested with polyphagous shot hole borer will follow handling procedures found at http://eskalenlab.ucr.edu/handouts/decisionmaking.pdf.

2.21 Excavated Areas. At the end of each work day, Permittee shall, with the oversight of the Designated Biologist or a trained construction management staff, secure any open trench or excavated area within the Project area addressed by this Agreement such that animals are unable to enter and become entrapped. The excavated areas must be secured using appropriate site- and species-specific methods, such as, placing plywood or other barrier materials over the excavated area, placing an escape ramp of suitable material and at an angle no greater than 30 degree at each end of the open trench/excavated area, or installing temporary fencing around the perimeter of trenches or holes.

Invasive Species

2.22 Prohibited Plant Species. Permittee shall not plant, seed or otherwise introduce invasive exotic plant species. Prohibited exotic plant species include those identified in the California Exotic Pest Plant Council's database, which is accessible at: https://www.cal-ipc.org/plants/inventory/.

2.23 Clean Equipment Prior to Entering Area Regulated by Agreement. All Equipment shall be free of materials deleterious to aquatic life including noxious and nuisance weeds, aquatic invasive species, oil, grease, hydraulic fluid, soil and other debris. The Permittee shall follow equipment washing guidelines (see conditions below) and complete the Certification of Clean Equipment. The Certification of Clean Equipment shall be completed by the Permittee for all equipment prior to initially entering areas regulated by this Agreement.

2.24 Inspection of Project Equipment. Permittee shall inspect all vehicles, tools, waders and boots, and other Project-related equipment and remove all visible soil/mud,

DocuSign Envelope ID: E2B645EE-32E1-44DF-8F2D-5481D6406260

plant materials, and animal remnants prior to initially entering areas regulated by this Agreement, and upon Equipment Operator recertification following decontamination.

2.25 Decontamination of Project Equipment. Permittee shall decontaminate all tools, waders and boots, vehicles, trailers, and other equipment that will be used in areas regulated by this Agreement and make contact with water or wetted soils prior to initially entering and upon reentering with verification that subsequent decontamination is required with the following specific guidance: Permittee shall decontaminate Project gear and equipment utilizing one of three methods: drying, using a hot water soak, or freezing, as appropriate to the type of gear or equipment. For all methods, Permittee shall begin the decontamination process by thoroughly scrubbing equipment, paying close attention to hard to reach and clean areas with a stiff-bristled brush to remove all plant, seeds, soil, and other organisms. To decontaminate by drying, Permittee shall allow equipment to dry thoroughly (i.e., until there is a complete absence of water and all plant, seeds, and soil), preferably in the sun, for a minimum of 48 hours. To decontaminate using a hot water soak, Permittee shall immerse equipment in 140°F or hotter water and soak for a minimum of 5 minutes. To decontaminate by freezing, Permittee shall place equipment in a freezer 32°F or colder for a minimum of 8 hours. Repeat decontamination is required only if the equipment/clothing is removed from the site, used in contact with water or wet soil within a different watershed, and returned to the Project site.

2.26 Decontamination of Vehicles and Equipment. Permittee shall decontaminate vehicles and other Project-related equipment too large to immerse in a hot water bath by pressure washing with hot water a minimum of 140°F at the point of contact or 155°F at the nozzle. Additionally, Permittee shall flush watercraft engines and all areas that could contain standing water (e.g., storage compartments) for a minimum of 10 minutes. Following the hot water wash, Permittee shall dry all vehicles, watercraft, and other large equipment as thoroughly as possible. Repeat Decontamination is required only if vehicles and/or equipment is removed from the site used in contact with water or wet soil within a different watershed and returned to the Project site.

2.27 Decontamination Sites. Permittee shall perform decontamination of vehicles, watercraft, and other Project gear and equipment in a designated location where runoff can be contained and not allowed to pass into CDFW jurisdictional areas and other sensitive habitat areas. Cleaning of equipment may occur at a location that contains and recycles resulting wastewater.

2.28 Other Project Equipment. Permittee or designee shall require operators of equipment to re-certify equipment upon reentry to areas regulated by this Agreement. Permittee shall require operators of equipment subject to recertification that are reentering after contact with water and/or wet soil from a

DocuSign Envelope ID: E2B645EE-32E1-44DF-8F2D-5481D6406260

stream or lake in areas outside those regulated under this Agreement to follow equipment washing guidelines (see measures above).

2.29 Notification of Invasive Species. Permittee shall notify CDFW immediately if an invasive species not previously known to occur within the Project site is discovered during Project activities by submitting a completed Suspect Invasive Species Report (available online at: https://wildlife.ca.gov/Conservation/Invasives/Report) and photos to the Invasive Species Program by email at: invasives@wildlife.ca.gov. Notification may also be provided by calling (866) 440-9530. Upon receiving notification, CDFW will provide Permittee with guidance for further action as appropriate to the species.

3 Compensatory Measures

To compensate for adverse impacts to fish and wildlife resources identified above that cannot be avoided or minimized. Permanent protection and funding for perpetual management of compensatory habitat must be complete before starting Project Activities, or within 18 months of the effective date of this Agreement if a letter of credit or other form of security approved by CDFW is provided pursuant to Measure 3.2 below for all uncompleted obligations.

3.1 Habitat Re-establishment and/or Rehabilitation – Offsite (Mitigation Bank). To compensate for permanent impacts to 1.19 acres of fish and wildlife resources subject to Fish and Game Code section 1600 et seq., Permittee shall purchase no less than 2.38 acres of streambed and riparian habitat rehabilitation credits through a CDFW-approved **mitigation bank**. Mitigation credits shall be purchased, and receipt provided to CDFW, **30 days prior to the initiation of Project activities**, which includes staging and site preparation, unless security is provided pursuant to Measure 3.2.

3.2 Financial Security. If Permittee is unable to purchase credits from a CDFW-approved mitigation bank no later than 30 days prior to initiation of Project activities covered by this Agreement as described in Measure 3.1, Permittee shall provide a Letter of Credit (LOC) in a form acceptable to CDFW, or other form of security approved by CDFW, in an amount sufficient to purchase 2.38 acres of streambed and riparian habitat rehabilitation credits through a CDFW-approved mitigation bank. The LOC shall reference the current costs associated with re-establishment and/or rehabilitation credits. The form and content of the LOC shall be the same or substantially similar to the template attached hereto as Exhibit 2. The LOC shall be **submitted to CDFW for approval and shall be executed 30 days prior to initiation of Project activities**.

3.2.1 Draft Copy of LOC. The Permittee shall provide a draft copy of the LOC to CDFW at the address listed below for review and approval prior to execution. The LOC shall not be executed without CDFW's prior approval.

DocuSign Envelope ID: E2B645EE-32E1-44DF-8F2D-5481D6406260

3.2.2 Expiration of LOC. In the event that the LOC will expire before the mitigation obligations have been met, the Permittee shall be responsible for providing CDFW a new LOC to replace the existing LOC at least sixty (60) days prior to the expiration date.

3.2.3 Execution of LOC. Upon execution of the LOC, the Permittee shall provide the original to the address listed on the LOC template, and one copy of the executed document to CDFW at the address listed below under Contact Information.

4 Reporting Measures

Permittee shall meet each reporting requirement described below.

4.1 Notification Prior to Work. The Permittee shall notify CDFW, in writing, at least five (5) days prior to initiation of Project-related activities and at least five (5) days prior to completion of Project and mitigation activities. Notification shall be sent to CDFW as identified in Measure 4.2.

4.2 Reporting. All surveys, pre- and post- construction notifications, monitoring reports, and any other required communication between the Permittee and CDFW shall be submitted in digital copy to R6LSAReporting@wildlife.ca.gov Reference # 1600-2019-0252-R6, and cc: Eric.Chan@wildlife.ca.gov. If CDFW requests hard copies of any documentation, Permittee shall mail to 3602 Inland Empire Blvd., Suite C-220, Ontario, CA 9764, Attn: Lake and Streambed Alteration Program, Reference # 1600-2019-0252-R6.

4.3 Final Construction Report. Permittee shall provide a final construction report to CDFW no later than **two weeks after the Project is fully completed** including color photographs of before and after Project-related activities, including the surrounding staging areas. The construction report at a minimum shall contain pre-Project photographs, total amount of area impacted post-Project, post-Project photographs, and biological survey notes (including construction monitoring).

4.4 Notification to the California Natural Diversity Data Base (CNDDB). If any sensitive species are observed on or in proximity to the Project site, or during Project surveys, the Permittee shall submit CNDDB forms and maps to the CNDDB **within five working days** of the sightings, and provide the regional CDFW office with copies of the CNDDB forms and survey maps. The CNDDB form is available online at https://www.wildlife.ca.gov/Data/CNDDB/Submitting-Data. A copy of this information will be mailed within five days to the CDFW Region 6, to 3602 Inland Empire Blvd., Suite C-220, Ontario, CA 9764, ATTN: Streambed Unit. Please reference SAA# 1600-2019-0252-R6.

4.5 Compliance. CDFW shall verify compliance with protective measures to ensure the accuracy of the Operator's mitigation, monitoring, and reporting efforts. CDFW

DocuSign Envelope ID: E2B645EE-32E1-44DF-8F2D-5481D6406260

may, at its sole discretion, review relevant documents maintained by the Operator, interview the Operator's employees and agents, inspect the work site, and take other actions to assess compliance with or effectiveness of protective measures in this Agreement.

4.6 List of Designated Biologists. The Permittee shall submit a proposed list of Designated Biologists to CDFW for review 30 days prior to Project Start (see Condition 2.1). CDFW will provide written response within 18 days of Permittee submittal, unless otherwise agreed to by CDFW in writing (email, letter, fax). The Permittee may utilize any of the Designated Biologists with the appropriate qualifications from the approved list without subsequent approvals from CDFW. The list may be updated at any time by CDFW or the Permittee with the prior approval of CDFW.

CONTACT INFORMATION

Any communication that Permittee or CDFW submits to the other shall be in writing and any communication or documentation shall be delivered to the address below by U.S. mail, fax, or email, or to such other address as Permittee or CDFW specifies by written notice to the other.

To Permittee:

Margery Lazarus
City of Moreno Valley
14177 Frederick Street
Moreno Valley, CA 92553
margeryl@moval.org

To CDFW:

Department of Fish and Wildlife
Inland Deserts Region
3602 Inland Empire Blvd., Suite C-220
Ontario, CA 9764
Attn: Lake and Streambed Alteration Program – Eric Chan
Notification #1600-2019-0252-R6
Eric.Chan@wildlife.ca.gov

LIABILITY

Permittee shall be solely liable for any violations of the Agreement, whether committed by Permittee or any person acting on behalf of Permittee, including its officers,

DocuSign Envelope ID: E2B645EE-32E1-44DF-8F2D-5481D6406260

employees, representatives, agents or contractors and subcontractors, to complete the Project or any activity related to it that the Agreement authorizes.

This Agreement does not constitute CDFW's endorsement of, or require Permittee to proceed with the Project. The decision to proceed with the Project is Permittee's alone.

SUSPENSION AND REVOCATION

CDFW may suspend or revoke in its entirety the Agreement if it determines that Permittee or any person acting on behalf of Permittee, including its officers, employees, representatives, agents, or contractors and subcontractors, is not in compliance with the Agreement.

Before CDFW suspends or revokes the Agreement, it shall provide Permittee written notice by certified or registered mail that it intends to suspend or revoke. The notice shall state the reason(s) for the proposed suspension or revocation, provide Permittee an opportunity to correct any deficiency before CDFW suspends or revokes the Agreement, and include instructions to Permittee, if necessary, including but not limited to a directive to immediately cease the specific activity or activities that caused CDFW to issue the notice.

ENFORCEMENT

Nothing in the Agreement precludes CDFW from pursuing an enforcement action against Permittee instead of, or in addition to, suspending or revoking the Agreement.

Nothing in the Agreement limits or otherwise affects CDFW's enforcement authority or that of its enforcement personnel.

OTHER LEGAL OBLIGATIONS

This Agreement does not relieve Permittee or any person acting on behalf of Permittee, including its officers, employees, representatives, agents, or contractors and subcontractors, from complying with, or obtaining any other permits or authorizations that might be required under, other federal, state, or local laws or regulations before beginning the Project or an activity related to it. For example, if the Project causes take of a species listed as threatened or endangered under the Endangered Species Act (ESA), such take will be unlawful under the ESA absent a permit or other form of authorization from the U.S. Fish and Wildlife Service or National Marine Fisheries Service.

This Agreement does not relieve Permittee or any person acting on behalf of Permittee, including its officers, employees, representatives, agents, or contractors and subcontractors, from complying with other applicable statutes in the Fish and Game Code including, but not limited to, Fish and Game Code sections 2050 *et seq*.

DocuSign Envelope ID: E2B645EE-32E1-44DF-8F2D-5481D6406260

(threatened and endangered species), section 3503 (bird nests and eggs), section 3503.5 (birds of prey), section 5650 (water pollution), section 5652 (refuse disposal into water), section 5901 (fish passage), section 5937 (sufficient water for fish), and section 5948 (obstruction of stream).

Nothing in the Agreement authorizes Permittee or any person acting on behalf of Permittee, including its officers, employees, representatives, agents, or contractors and subcontractors, to trespass.

AMENDMENT

CDFW may amend the Agreement at any time during its term if CDFW determines the amendment is necessary to protect an existing fish or wildlife resource.

Permittee may amend the Agreement at any time during its term, provided the amendment is mutually agreed to in writing by CDFW and Permittee. To request an amendment, Permittee shall submit to CDFW a completed CDFW "Request to Amend Lake or Streambed Alteration" form and include with the completed form payment of the corresponding amendment fee identified in CDFW's current fee schedule (see Cal. Code Regs., tit. 14, § 699.5).

TRANSFER AND ASSIGNMENT

This Agreement may not be transferred or assigned to another entity, and any purported transfer or assignment of the Agreement to another entity shall not be valid or effective, unless the transfer or assignment is requested by Permittee in writing, as specified below, and thereafter CDFW approves the transfer or assignment in writing.

The transfer or assignment of the Agreement to another entity shall constitute a minor amendment, and therefore to request a transfer or assignment, Permittee shall submit to CDFW a completed CDFW "Request to Amend Lake or Streambed Alteration" form and include with the completed form payment of the minor amendment fee identified in CDFW's current fee schedule (see Cal. Code Regs., tit. 14, § 699.5).

EXTENSIONS

In accordance with Fish and Game Code section 1605, subdivision (b), Permittee may request one extension of the Agreement, provided the request is made prior to the expiration of the Agreement's term. To request an extension, Permittee shall submit to CDFW a completed CDFW "Request to Extend Lake or Streambed Alteration" form and include with the completed form payment of the extension fee identified in CDFW's current fee schedule (see Cal. Code Regs., tit. 14, § 699.5). CDFW shall process the extension request in accordance with Fish and Game Code section 1605, subdivisions (b) through (e).

DocuSign Envelope ID: E2B645EE-32E1-44DF-8F2D-5481D6406260

If Permittee fails to submit a request to extend the Agreement prior to its expiration, Permittee must submit a new notification and notification fee before beginning or continuing the Project the Agreement covers (Fish & G. Code § 1605, subd. (f)).

EFFECTIVE DATE

The Agreement becomes effective on the date of CDFW's signature, which shall be: 1) after Permittee's signature; 2) after CDFW complies with all applicable requirements under the California Environmental Quality Act (CEQA); and 3) after payment of the applicable Fish and Game Code section 711.4 filing fee listed at https://www.wildlife.ca.gov/Conservation/CEQA/Fees.

TERM

This Agreement shall expire on September 10, 2025, unless it is terminated or extended before then. All provisions in the Agreement shall remain in force throughout its term. Permittee shall remain responsible for implementing any provisions specified herein to protect fish and wildlife resources after the Agreement expires or is terminated, as Fish and Game Code section 1605, subdivision (a)(2) requires.

EXHIBITS

The documents listed below are included as exhibits to the Agreement and incorporated herein by reference.

A. Exhibit 1. Project Location
B. Exhibit 2. Project Impacts
C. Exhibit 3. Irrevocable Standby Letter of Credit

AUTHORITY

If the person signing the Agreement (signatory) is doing so as a representative of Permittee, the signatory hereby acknowledges that he or she is doing so on Permittee's behalf and represents and warrants that he or she has the authority to legally bind Permittee to the provisions herein.

AUTHORIZATION

This Agreement authorizes only the Project described herein. If Permittee begins or completes a Project different from the Project the Agreement authorizes, Permittee may be subject to civil or criminal prosecution for failing to notify CDFW in accordance with Fish and Game Code section 1602.

DocuSign Envelope ID: E2B645EE-32E1-44DF-8F2D-5481D6406260

CONCURRENCE

The undersigned accepts and agrees to comply with all provisions contained herein.

FOR CITY OF MORENO VALLEY

DocuSigned by:
Margery A Lazarus
52A83AAEAFD5434...

9/29/2020

Margery Lazarus
Designated Representative

Date

FOR DEPARTMENT OF FISH AND WILDLIFE

DocuSigned by:
Scott Wilson
8091B1A9242F49C...

10/13/2020

Scott Wilson
Environmental Program Manager

Date

Prepared by: Eric Chan
Environmental Scientist

DocuSign Envelope ID: E2B645EE-32E1-44DF-8F2D-5481D6406260

EXHIBIT 1

DocuSign Envelope ID: E2B645EE-32E1-44DF-8F2D-5481D6406260

Figure 1. Project Locations

Exhibit 1. Project Location

DocuSign Envelope ID: E2B645EE-32E1-44DF-8F2D-5481D6406260

EXHIBIT 2

DocuSign Envelope ID: E2B645EE-32E1-44DF-8F2D-5481D6406260

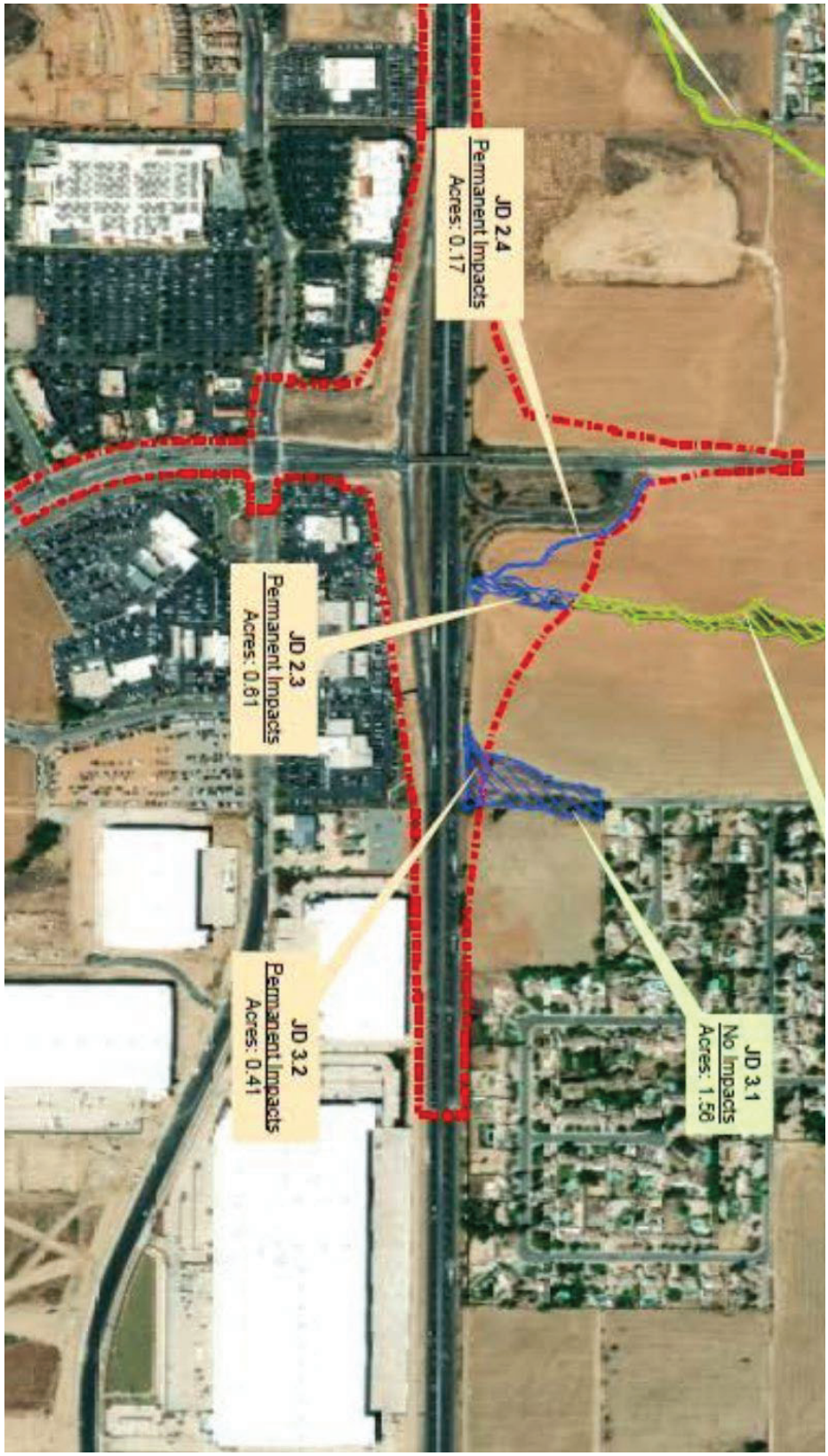

Exhibit 2. Project Impacts

DocuSign Envelope ID: E2B645EE-32E1-44DF-8F2D-5481D6406260

EXHIBIT 3

DocuSign Envelope ID: E2B645EE-32E1-44DF-8F2D-5481D6406260

[***Financial institution letterhead***]

IRREVOCABLE STANDBY LETTER OF CREDIT
NO. [***number issued by financial institution***]

Issue Date: [***date***]

Beneficiary:

Department of Fish and Wildlife
Habitat Conservation Planning Branch
Post Office Box 944209
Sacramento, CA 94244-2090
Attn: HCPB Contract Coordinator

Amount: U.S. $[***dollar number***] [(***dollar amount***)]

Expiry: [***Date***] at our counters

Dear Sirs:

1. At the request and on the instruction of our customer, [***name of applicant***] ("Applicant"), we, [***name of financial institution***] ("Issuer"), hereby establish in favor of the beneficiary, the California Department of Fish and Wildlife ("CDFW"), this irrevocable standby letter of credit ("Credit") in the principal sum of U.S. $[***dollar number***] [(***dollar amount***)] ("Principal Sum").

2. We are informed this Credit is and has been established for the benefit of CDFW pursuant to the terms of the [***insert:*** "lake" ***or*** "streambed"] alteration agreement (No. [***permit number***]) for the [***name of Project***] issued by CDFW to the Applicant on [***date***] (No. [***number***]) ("Permit").

3. We are further informed that pursuant to the Permit, the Applicant has agreed to complete certain mitigation requirements, as set forth in Conditions [***numbers***] in the Permit ("Mitigation Requirements").

4. We are finally informed that this Credit is intended by CDFW and the Applicant to serve as a security device for the performance by the Applicant of the Mitigation Requirements.

5. CDFW shall be entitled to draw upon this Credit only by presentation of a duly executed Certificate for Drawing ("Certificate") in the same form as Attachment A, which is attached hereto, at our office located at [***name and address of financial institution***].

DocuSign Envelope ID: E2B645EE-32E1-44DF-8F2D-5481D6406260

6. The Certificate shall be completed and signed by an "Authorized Representative" of CDFW as defined in paragraph 12 below. Presentation by CDFW of a completed Certificate may be made in person or by registered mail, return receipt requested, or by overnight courier.

7. Upon presentation of a duly executed Certificate as above provided, payment shall be made to CDFW, or to the account of CDFW, in immediately available funds, as CDFW shall specify.

8. If a demand for payment does not conform to the terms and conditions of this Credit, we shall give CDFW prompt notice that the demand for payment was not effected in accordance with the terms and conditions of this Credit, state the reasons therefore, and await further instruction.

9. Upon being notified that the demand for payment was not effected in conformity with the Credit, CDFW may correct any such non-conforming demand for payment under the terms and conditions stated herein.

10. All drawings under this Credit shall be paid with our funds. Each drawing honored by us hereunder shall reduce, *pro tanto*, the Principal Sum. By paying to CDFW an amount demanded in accordance herewith, we make no representations as to the correctness of the amount demanded.

11. This Credit will be cancelled upon receipt by us of Certificate of Cancellation/Reduction, which: (i) shall be in the form of Attachment B, which is attached hereto, and (ii) shall be completed and signed by an Authorized Representative of CDFW, as defined in paragraph 12 below.

12. An "Authorized Representative" shall mean the Director of CDFW; the General Counsel of CDFW; a Regional Manager of CDFW; or the Branch Chief of CDFW's Habitat Conservation Planning Branch.

13. This Credit shall be automatically extended without amendment for additional periods of one year from the present or any future expiration date hereof, unless at least sixty (60) days prior to any such date, we notify CDFW in writing by registered mail, return receipt requested, or by overnight courier that we elect not to consider this Credit extended for any such period.

14. Communications with respect to this Credit shall be in writing and addressed to us at [***name and address of financial institution***], specifically referring upon such writing to this credit by number. The address for notices with respect to this Credit shall be: (i) for CDFW: Department of Fish and Wildlife, Habitat Conservation Planning Branch, Post Office Box 944209, Sacramento, CA 94244-2090, Attn: HCPB Contract Coordinator; and (ii) for the Applicant: [***name and address of applicant***].

15. This Credit may not be transferred.

DocuSign Envelope ID: E2B645EE-32E1-44DF-8F2D-5481D6406260

16. This Credit is subject to the International Standby Practices 1998 ("ISP 98"). As to matters not covered by the ISP 98 and to the extent not inconsistent with the ISP 98, this credit shall be governed by and construed in accordance with the Uniform Commercial Code, Article 5 of the State of California.

17. This Credit shall, if not canceled, expire on [***expiration date***], or any extended expiration date.

18. We hereby agree with CDFW that documents presented in compliance with the terms of this Credit will be duly honored upon presentation, as specified herein.

19. This Credit sets forth in full the terms of our undertaking. Such undertaking shall not in any way be modified, amended or amplified by reference to any document or instrument referred to herein or in which this Credit is referred to or to which this Credit relates and any such reference shall not be deemed to incorporate herein by reference any document or instrument.

[***Name of financial institution***]

By: _____
Name: _____
Title: _____
Telephone: _____

DocuSign Envelope ID: E2B645EE-32E1-44DF-8F2D-5481D6406260

ATTACHMENT A

IRREVOCABLE STANDBY LETTER OF CREDIT NO. [***number issued by financial institution***]
CERTIFICATE FOR DRAWING

To:

[***Name and address of financial institution***]

Re: [***Insert:*** "Lake" ***or*** "Streambed"] Alteration Agreement (No. [***permit number***])

The undersigned, a duly Authorized Representative of the California Department of Fish and Wildlife ("CDFW"), as defined in paragraph 12 in the above-referenced Irrevocable Standby Letter of Credit ("Credit"), hereby certifies to the Issuer that:

1. [***Insert one of the following statements:*** "In the opinion of CDFW, the Applicant has failed to complete the Mitigation Requirements referenced in paragraph 3 of the Credit." ***or*** "As set forth in paragraph 13, the Issuer has informed CDFW that the Credit will not be extended and the Applicant has not provided CDFW with an equivalent security approved by CDFW to replace the Credit."]

2. The undersigned is authorized under the terms of the Credit to present this Certificate as the sole means of demanding payment on the Credit.

3. CDFW is therefore making a drawing under the Credit in amount of U.S. $_____.

4. The amount demanded does not exceed the Principal Sum of the Credit.

Therefore, CDFW has executed and delivered this Certificate as of the ___day of [***month***], [***year***].

CALIFORNIA DEPARTMENT OF FISH AND WILDLIFE

BY:_____
[***Insert one of the following:*** "DIRECTOR" ***or*** "GENERAL COUNSEL" ***or*** "REGIONAL MANAGER, [NAME OF REGIONAL OFFICE]" ***or*** "BRANCH CHIEF, HABITAT CONSERVATION PLANNING BRANCH"]

DocuSign Envelope ID: E2B645EE-32E1-44DF-8F2D-5481D6406260

5 ATTACHMENT B

IRREVOCABLE LETTER OF CREDIT NO. [***number issued by financial institution***]

6 CERTIFICATE FOR CANCELLATION

To:

[***Name of financial institution and address***]

Re: [***Insert:*** "Lake" ***or*** "Streambed"] Alteration Agreement (No. [***permit number***])

The undersigned, a duly Authorized Representative of the California Department of Fish and Wildlife ("CDFW"), as defined in the paragraph 12 in the above-referenced Irrevocable Standby Letter of Credit ("Credit"), hereby certifies to the Issuer that:

1. [***Insert one of the following statements:*** "The Applicant has presented documentary evidence of full compliance with the Mitigation Requirements referenced in paragraph 3 of the Credit." ***or*** "The Applicant has presented documentary evidence of compliance with the following Mitigation Requirement[(***s***)] referenced in paragraph 3 of the Credit: [***insert brief description of requirement(s) or requirement number(s) completed***]." ***or*** "The Applicant has provided CDFW with an equivalent security approved by CDFW to replace the Credit."]

2. [***Insert one of the following statements:*** "CDFW therefore requests the cancellation of the Credit." ***or*** "CDFW therefore requests a reduction in the Principal Sum in the amount of $_____, thereby making the new Principal Sum $_____."]

[***Insert one of the following statements:*** "Therefore, CDFW has executed and delivered this Certificate for Cancellation as of the ____ day of [***month***], [***year***]. ***or*** "Therefore, CDFW has executed and delivered this Certificate for Reduction as of the ____ day of [***month***], [***year***]."]

CALIFORNIA DEPARTMENT OF FISH AND WILDLIFE

BY: _____
[***Insert one of the following:*** "DIRECTOR" ***or*** "GENERAL COUNSEL" ***or*** "REGIONAL MANAGER, [NAME OF REGIONAL OFFICE]" ***or*** "BRANCH CHIEF, HABITAT CONSERVATION PLANNING BRANCH"]

APPENDIX O

CDFG 1600-2019-0104-R6 AGREEMENT (LINE K-1)

DocuSign Envelope ID: CEE599B1-27B7-4607-9980-F1BC7072329B

CALIFORNIA DEPARTMENT OF FISH AND WILDLIFE
INLAND DESERTS REGION
3602 INLAND EMPIRE BLVD., SUITE C-220
ONTARIO, CA 91764

STREAMBED ALTERATION AGREEMENT
NOTIFICATION NO. 1600-2019-0104-R6

CITY OF MORENO VALLEY
LINE K-1 PROJECT

This Streambed Alteration Agreement (Agreement) is entered into between the California Department of Fish and Wildlife (CDFW) and City of Moreno Valley (Permittee) or as represented by Margery Lazarus.

RECITALS

WHEREAS, pursuant to Fish and Game Code section 1602, Permittee notified CDFW on April 3, 2019 that Permittee intends to complete the project described herein.

WHEREAS, pursuant to Fish and Game Code section 1603, CDFW has determined that the project could substantially adversely affect existing fish or wildlife resources and has included measures in the Agreement necessary to protect those resources.

WHEREAS, Permittee has reviewed the Agreement and accepts its terms and conditions, including the measures to protect fish and wildlife resources.

NOW THEREFORE, Permittee agrees to complete the project in accordance with the Agreement.

PROJECT LOCATION

The Line K-1 Project (Project) is located at the intersection of State Route 60 and Moreno Beach Drive, in the City of Moreno Valley, in the County of Riverside, State of California; Latitude 33. 946459°, Longitude -117.175510 °; on the U.S. Geological Survey (USGS) Sunnymead 7.5 minute series quadrangle topographic map.

PROJECT DESCRIPTION

The Project proposes to construct a new drainage system along Ironwood Avenue (Line K-1) that directs a portion of the storm drain flows from the existing system at Moreno Beach Drive to the “Nason Basin” located at the northeast corner of the SR-60/Nason Street interchange. It is expected that construction of the Line K-1 diversion will allow lower flows (up to a maximum of 365 cubic feet per second) to continue to run through the existing drainage. High flows will be diverted to the Nason Basin. (Exhibit 1)

DocuSign Envelope ID: CEE599B1-27B7-4607-9980-F1BC7072329B

PROJECT IMPACTS

Existing fish or wildlife resources the Project could substantially adversely affect include: AMPHIBIANS: Baja California tree frog (*Pseudacris hypochondriaca*), Western Spadefoot (*Scaphiopus hammondii*); BIRDS- Allen's Hummingbird (*Selasphorus sasin*), American Goldfinch (*Carduelis tristi*), American Kestrel (*Falco sparverius*), American Robin (*Turdus migratorius*), American Wigeon (*Mareca americana*), Anna's Hummingbird (*Calypte anna*), Ash-throated Flycatcher (*Myiarchus cinerascens*), Barn Owl (*Tyto alba*), Barn Swallow (*Hirundo rustica*), Bewick's Wren (*Thryomanes bewickii*), Black Phoebe (*Sayornis nigricans*), Black-chinned Hummingbird (*Archilochus alexandr*), Black-necked Stilt (*Himantopus mexicanus*), Brewer's Blackbird (*Euphagus cyanocephalus*), Bullock's Oriole (*Icterus bullockii*), Burrowing Owl (*Athene cunicularia*), Bushtit (*Psaltriparus minimus*), California Towhee (*Melozone crissalis*), Cattle Egret (*Bubulcus ibis*), Chipping Sparrow (*Spizella passerina*), Common Yellowthroat (*Geothlypis trichas*), Cooper's Hawk (*Accipiter cooperii*), Costa's Hummingbird (*Calypte costae*), Grasshopper Sparrow (*Ammodramus savannarum*), Great Egret (*Ardea alba*), Great Horned Owl (*Bubo virginianus*), Hooded Oriole (*Icterus cucullatus*), House Finch (*Haemorhous mexicanus*), House Wren (*Troglodytes aedon*), Hutton's Vireo (*Vireo huttoni*), Killdeer (*Charadrius vociferous*), Lark Sparrow (*Chondestes grammacus*), Lawrence's Goldfinch (*Carduelis lawrencei*), Least Bell's Vireo (*Vireo bellii pusillus*), Lesser Goldfinch (*Carduelis psaltria*), Lincoln's Sparrow (*Melospiza lincolnii*), Mallard (*Anas platyrhynchos*), Marsh Wren (*Cistothorus palustris*), Northern Flicker (*Colaptes auratus*), Northern Mockingbird (Mimus polyglottos), Northern Rough- winged Swallow (Steligopteryx serripennis), Orange-crowned Warbler (*Oreothypis celata*), Red-shouldered Hawk (Buteo lineatus), Red-tailed Hawk (*Buteo jamaicensis*), Red-winged Blackbird (*Agelaius phoeniceus*), Rufous Hummingbird (*Selasphorus rufus*), Say's Phoebe (*Sayornis saya*), Snowy Egret (*Egretta thula*), Song Sparrow (*Melospiza melodia*), Sora (*Porzana carolina*), Southern California Rufous-crowned Sparrow (*Aimophila ruficeps canescens*), Spotted Towhee (*Pipilo maculatus*), Swainson's Thrush (*Catharus ustulatus*), Townsend's Warbler (*Setophaga townsendi*), Tree Swallow (*Tachycineta bicolor*), Turkey Vulture (*Cathartes aura*), Violet-green Swallow (*Tachycineta thalassina*), Western Meadowlark (*Sturnella neglecta*), White-throated Swift (*Aeronautes saxatalis*), Wilson's Warbler (*Cardellina pusilla*), Wrentit (*Chamaea fasciata*), Yellow-rumped Warbler (*Setophaga coronate),* Yellow Warbler (*Setophaga petechia*); MAMMALS- Bobcat (*Lynx rufus*), Botta's pocket gopher *(Thomomys bottae),* California ground squirrel *(Spermophilus beecheyi)*, Coyote (*Canis latrans*), Desert cottontail (*Sylvilagus audubonii)* Southern grasshopper mouse (*Onychomys torridus*), San Diego black- tailed jackrabbit (*Lepus californicus bennettii*); REPTILES- California legless lizard (*Anniella pulchra*), two-striped garter snake (*Thamnophis hammondii*), Coachwhip (*Masticophis flagellum*), Pacific Gopher Snake (*Pituophis melanleucus catenifer*), Red-diamond Rattlesnake (*Crotalus ruber*), Rosy Boa (*Lichanura trivirgata*), side-blotched lizard (*Uta stansburiana*), and Western whiptail (*Cnemidophorus tigris*).

The adverse effects the Project could have on the fish or wildlife resources identified above include: the disturbance to, alteration of, and/or loss of nesting, roosting, and

DocuSign Envelope ID: CEE599B1-27B7-4607-9980-F1BC7072329B

foraging habitat; the reduction or loss of habitat coverage, composition, and distribution; the disturbance to and alteration of wildlife movement corridors; and temporary impacts to water quality. The Project will permanently impact a total of 0.16 acres, and temporarily impact a total of 0.202 acres of fish and wildlife resources subject to Fish and Game Code section 1600 et seq; total Project impacts of 0.362 acres to fish and wildlife resources subject to Fish and Game Code section 1600 et seq. are authorized under this Agreement.

MEASURES TO PROTECT FISH AND WILDLIFE RESOURCES

1 Administrative Measures

Permittee shall meet each administrative requirement described below.

1.1 Documentation at Project Site. Permittee shall make the Agreement, any extensions and amendments to the Agreement, and all related notification materials and California Environmental Quality Act (CEQA) documents, readily available at the Project site at all times and shall be presented to CDFW personnel, or personnel from another state, federal, or local agency upon request.

1.2 Providing Agreement to Persons at Project Site. Permittee shall provide copies of the Agreement and any extensions and amendments to the Agreement to all persons who will be working on the Project at the Project site on behalf of Permittee, including but not limited to contractors, subcontractors, inspectors, and monitors.

1.3 Notification of Conflicting Provisions. Permittee shall notify CDFW if Permittee determines or learns that a provision in the Agreement might conflict with a provision imposed on the Project by another local, state, or federal agency. In that event, CDFW shall contact Permittee to resolve any conflict.

1.4 Project Site Entry. Permittee agrees that CDFW personnel may enter the Project site at any time to verify compliance with the Agreement.

1.5 Take of Listed Species. The issuance of this Agreement does not authorize the take of any state- or federally-listed threatened, endangered, or fully protected species. Take of any California Endangered Species Act (CESA)-listed species is prohibited except as authorized by state law (Fish and Game Code, §§ 2080 & 2085). Consequently, if a Project, including Project construction or any Project-related activity during the life of the Project, results in take of CESA-listed species, the Department recommends that the Project proponent seek appropriate authorization prior to Project implementation. This may include an incidental take permit (ITP) or a consistency determination (Fish and Game Code, §§ 2080.1 & 2081).

DocuSign Envelope ID: CEE599B1-27B7-4607-9980-F1BC7072329B

1.6 Take of Nesting Birds. Fish and Game Code section 3503 makes it unlawful to take, possess, or needlessly destroy the nest or eggs of any bird, except as otherwise provided by Fish and Game Code or any regulation made pursuant thereto. Fish and Game Code section 3503.5 makes it unlawful to take, possess, or destroy any birds in the orders Falconiformes or Strigiformes (birds-of-prey) to take, possess, or destroy the nest or eggs of any such bird except as otherwise provided by Fish and Game Code or any regulation adopted pursuant thereto. Fish and Game Code Section 3513 makes it unlawful to take or possess any migratory nongame bird except as provided by the rules and regulations adopted by the Secretary of the Interior under provisions of the Migratory Bird Treaty Act 1918, as amended (16 U.S.C. § 703 et seq.). The issuance of this Agreement does not in any way exempt or excuse compliance with these statutes.

1.7 Additional Project Impacts. Permittee shall submit to CDFW a request to amend this Agreement if any additional impacts to Fish and Game Code section 1602 resources, or additional operations and maintenance activities not identified in this Agreement are anticipated. No additional impacts to Fish and Game Code section 1602 resources are authorized unless the impacts and/or activities are expressly authorized by CDFW by amendment to this Agreement.

2 Avoidance and Minimization Measures

To avoid or minimize adverse impacts to fish and wildlife resources identified above, Permittee shall implement each measure listed below.

2.1 Designated Biologist. Permittee shall submit to CDFW for review and approval the names, qualifications, business addresses, and contact information of any qualified biologists (Designated Biologists) that will be utilized to conduct species/habitat surveys, biological monitoring, or mitigation planning and implementation activities at least 30 days before initiating ground- or vegetation- disturbing activities. Permittee shall specify the proposed responsibilities of each Designated Biologist and provide clear evidence that the Designated Biologist is knowledgeable, experienced, and capable of performing those proposed duties.

2.2 Responsibility of the Designated Biologist. The Designated Biologist(s) shall be responsible for monitoring activities addressed by this Agreement, including, but not limited to all activities that result in clearing, grading, drilling, and/or other ground-disturbing activities. To ensure compliance with the measures of this Agreement, the Designated Biologist(s) shall confirm and monitor the limits of Project activities addressed by this Agreement.

2.3 Authority of Designated Biologists. To ensure compliance with the measures of this Agreement, the Designated Biologists shall have the authority to immediately halt any activity that does not comply with this Agreement, order any reasonable measure to avoid the violation of any measure of this Agreement, and directly contact CDFW for any reason. If the Designated Biologist(s) determines that the

DocuSign Envelope ID: CEE599B1-27B7-4607-9980-F1BC7072329B

Project may have an adverse effect on any special-status species (threatened, endangered, candidate, species of special concern, etc.), they must halt construction and notify the appropriate agencies immediately. Unless authorized by CDFW, the Designated Biologists shall not have the authority to handle any special-status species (threatened, endangered, candidate, species of special concern, etc.).

2.4 Delineate Work Area Boundary (See Exhibit 1). In consultation with the Designated Biologist, Permittee shall clearly delineate the outer perimeter of the work areas and access routes with appropriate fencing, signage, and/or flagging to prevent damage to adjacent habitats. The delineation materials shall be in place during all periods of operation and all persons employed or otherwise working on the Project site shall be instructed about the restrictions. Permittee shall ensure the delineation materials are monitored daily, and maintained, repaired, or replaced immediately if the materials are damaged, lost, stolen, or become ineffective in any way. The Designated Biologist(s) shall ensure the delineation materials do not create a barrier to wildlife movement and will not pose a risk to wildlife safety.

2.5 Environmentally Sensitive Areas. The Designated Biologist shall determine and clearly delineate any necessary avoidance and/or buffer areas with appropriate fencing, signage, and/or flagging. The delineation materials shall be visibly discernable from the 'standard work area boundary' materials and all persons employed or otherwise working on the Project site shall be instructed about the restrictions associated with these environmentally sensitive areas. Permittee shall ensure the delineation materials are monitored daily, and maintained, repaired, or replaced immediately if the materials are damaged, lost, stolen, or become ineffective in any way. The Designated Biologist(s) shall ensure the delineation materials do not create a barrier to wildlife movement and will not pose a risk to wildlife safety.

2.6 Educational Program. Permittee shall conduct an Education Program for all persons employed or otherwise working on the Project prior to performing any work on site. The program shall consist of a presentation from a Designated Biologist that includes a discussion of the biology of the habitats and species identified in this Agreement and present at this site. The Designated Biologist shall also include as part of the education program information about the distribution and habitat needs of any Protected Species that may be present, legal protections for those species, penalties for violations and Project-specific protective measures included in this Agreement. Interpretation shall be provided for non-English speaking workers, and the same instruction shall be provided for any new workers prior to their performing work on site. The Permittee shall prepare and distribute wallet-sized cards or a fact sheet that contains this information for workers to carry on site. Upon completion of the education program, employees shall sign a form stating they attended the program and understand all protection measures. These forms shall be filed at the worksite offices and be available to CDFW upon request. The Education Program shall be repeated annually for part of the Project extending

DocuSign Envelope ID: CEE599B1-27B7-4607-9980-F1BC7072329B

more than one (1) year. Copies of program materials shall be maintained at the Project site for workers to reference as needed.

2.6.1 Invasive Species Education Program. Permittee shall include an invasive species Education Program for all persons working on the Project prior to the performing any work on site. The program shall consist of a presentation from a Designated Biologist that includes a discussion of the invasive species currently present within the Project site as well as those that may pose a threat to or have the potential to invade the Project site. The discussion shall include a physical description of each species and information regarding their habitat preferences, local and statewide distribution, modes of dispersal, and impacts. The program shall also include a discussion of BMPs to be implemented at the Project site to avoid the introduction and spread of invasive species into and out of the Project site.

2.7 Nesting Birds. It is the Permittee's responsibility to avoid impacts to nesting birds. Permittee shall ensure that impacts to nesting birds are avoided through the implementation of preconstruction surveys, ongoing monitoring, and if necessary, establishment of minimization measures.

2.7.1 Designated Avian Biologist. The Permittee shall designate a biologist with the following experience: identifying local and migratory bird species; conducting bird surveys using appropriate survey methodology (e.g., Ralph et al. 1993[1] and United States Fish and Wildlife Service and/or CDFW-accepted species-specific survey protocols, available here: https://www.wildlife.ca.gov/conservation/survey-protocols); nesting surveying techniques, recognizing breeding and nesting behaviors, locating nests and breeding territories, and identifying nesting stages and nest success (e.g., Martin and Geupel 1993[2]); determining/establishing appropriate avoidance and minimization measures; and monitoring the efficacy of implemented avoidance and minimization measures.

2.7.2 Pre-construction Surveys. Surveys shall be conducted by the Designated Avian Biologist at the appropriate time of day/night, during appropriate weather conditions, between three (3) and seven (7) days prior to the initiation of Project activities addressed by this Agreement. Surveys shall encompass all suitable areas including trees, shrubs, bare ground, burrows, cavities, and structures. Survey duration shall take into consideration the size of area subject to this Agreement; density, and complexity of the habitat; number of survey participants; survey

[1] Ralph, C.J., G.R. Geupel, P. Pyle, T.E. Martin, and D.F. DeSanta. 1993. Handbook of field methods for monitoring landbirds. General Technical Report PSW-GTR 144. USDA Forest Service Pacific Southwest Research Station. Albany, CA.

[2] Martin, T.E. and G.R. Geupel. 1993. Nest-monitoring plots: methods for locating nests and monitoring success. Journal of Field Ornithology 64:507-514.

DocuSign Envelope ID: CEE599B1-27B7-4607-9980-F1BC7072329B

techniques employed; and shall be sufficient to ensure the data collected is complete and accurate. Pre-construction surveys shall focus on both direct and indirect evidence of nesting, including nest locations and nesting behavior (e.g., copulation, carrying of food or nest materials, nest building, removal of fecal sacks, flushing suddenly from atypically close range, agitation, aggressive interactions, feigning injury or distraction displays, or other behaviors). If a nest is suspected, but not confirmed, the Designated Avian Biologist shall establish a disturbance-free buffer until additional surveys can be completed, or until the location can be inferred based on observations. The Designated Avian Biologist shall not risk failure of the nest to determine the exact location or status and will make every effort to limit the nest to potential predation as a result of the survey/monitoring efforts (e.g., limit number of surveyors, limit time spent at/near the nest, scan the site for potential nest predators before approaching, immediately depart nest area if indicators of stress or agitation are displayed). If a nest is observed, but thought to be inactive, the Designated Avian Biologist shall monitor the nest for one hour (four hours for raptors during the non-breeding season) prior to approaching the nest to determine status. The Designated Avian Biologist shall use their best professional judgement regarding the monitoring period and whether approaching the nest is appropriate. Results of pre-construction surveys shall be provided to CDFW at least one business day prior to commencement of Project activities, as identified in Measure 4.2. Results of ongoing monitoring surveys shall be provided to CDFW upon request.

2.7.3 Buffers. When an active nest is confirmed, the Designated Avian Biologist shall immediately establish a conservative buffer surrounding the nest based on their best professional judgement and experience. The buffer shall be delineated to ensure that its location is known by all persons working within the vicinity but shall not be marked in such a manner that it attracts predators. Once the buffer is established, the Designated Avian Biologist shall document baseline behavior, stage of reproduction, and existing site conditions, including vertical and horizontal distances from proposed work areas, visual or acoustic barriers, and existing level of disturbance. The Designated Avian Biologist shall monitor the nest at the onset of Project activities addressed by this Agreement, and at the onset of any changes in Project activities (e.g., increase in number or type of equipment, change in equipment usage, etc.) to determine the efficacy of the buffer. If the Designated Avian Biologist determines that Project activities may be causing an adverse reaction, the Designated Avian Biologist shall adjust the buffer accordingly.

2.7.4 Ongoing Monitoring. The Designated Avian Biologist shall be onsite daily to monitor all existing nests, the efficacy of established buffers, and to document any new nesting occurrences. The Designated Avian Biologist

DocuSign Envelope ID: CEE599B1-27B7-4607-9980-F1BC7072329B

shall document the status of all existing nests, including the stage of reproduction and the expected fledge date. If a nest is suspected to have been abandoned or failed, the Designated Avian Biologist shall monitor the nest for a minimum of one hour (four hours for raptors), uninterrupted, during favorable field conditions. If no activity is observed during that time, the Designated Avian Biologist may approach the nest to assess the status.

2.7.5 Securing Site. The Permittee, under the direction of the Designated Avian Biologist, may also take steps to discourage nesting on the Project site, including moving equipment and materials daily, covering material with tarps or fabric, and securing all open pipes and construction materials. The Designated Avian Biologist shall ensure that none of the deterrent materials pose an entanglement risk to birds or other species. The Designated Avian Biologist(s) shall include a detailed account of any steps taken to discourage nesting within the Project site in the summary reports.

2.7.6 Reporting. The Designated Avian Biologist shall be responsible for providing summary reports, as specified in Measure 4.3, where relevant, to CDFW no less than once weekly regarding the nesting species identified onsite, discovery of any of new nests, the status/outcome of any previously identified nest, buffer distances established for each nest, and any adjustments made to established buffers. If Project activities result in the abandonment of, or damage to a nest, Permittee shall notify CDFW within 24 hours of detection.

2.8 Biological Monitoring. The Designated Biologist(s) shall be onsite daily, while Project activities are occurring and shall be responsible for monitoring all Project activities that have the potential to impact fish and wildlife resources subject to Fish and Game Code section 1600 et seq., including streams, associated vegetation/habitat, and wildlife. The Designated Biologist(s) shall ensure that all avoidance and minimization measures are implemented and maintained, including, but not limited to: determining and delineating appropriate avoidance and buffer areas, maintaining delineated access routes and work areas, monitoring for the presence of, and potential impacts to, special-status species, and maintaining/repairing/replacing any exclusionary fencing and trench/excavation covers.

2.9 Best Management Practices. Permittee shall actively implement Best Management Practices (BMPs) to prevent erosion and the discharge of sediment and pollutants during Project activities. BMPs shall be monitored and repaired if necessary to ensure maximum erosion, sediment, and pollution control. Permittee shall prohibit the use of erosion control materials potentially harmful to fish and wildlife species, such as mono-filament netting (erosion control matting) or similar material. All fiber rolls, straw wattles, and/or hay bales utilized within and adjacent to the Project site shall be free of nonnative plant materials. Fiber rolls or erosion control mesh shall

DocuSign Envelope ID: CEE599B1-27B7-4607-9980-F1BC7072329B

be made of loose-weave mesh that is not fused at the intersections of the weave, such as jute, or coconut (coir) fiber, or other products without welded weaves. Non-welded weaves reduce entanglement risks to wildlife by allowing animals to push through the weave, which expands when spread. Permittee shall ensure BMPs do not pose a barrier to wildlife movement and shall be installed to allow for the safe passage of wildlife movement, particularly of less vagile species (such as small mammals and reptiles), out of the Project area. Long, continuous lengths of silt-fencing or other BMP materials installed without gaps can create a barrier to wildlife movement, trapping wildlife within the Project area. Areas of safe passage can be easily accommodated by leaving small gaps between parallel and overlapping lengths of BMPs.

2.10 Surface Water Diversion. In the event vehicles/equipment are to be driven/operated within the reservoir/stream when surface water inflow is present, the entire surface water flow shall be diverted around the work area. The Permittee shall notify CDFW of its intent to access the stream and implement the diversion plan submitted as part of the notification. Construction of the barrier and/or the new channel shall normally begin in the downstream area and continue in an upstream direction, and the flow shall be diverted only when construction of the diversion is completed. Channel bank or barrier construction shall be adequate to prevent seepage into or from the work area. The enclosure and the supportive material shall be removed when the work is completed, and removal shall normally proceed from downstream in an upstream direction.

2.11 Temporary Dam. Any temporary dam or other artificial obstruction for Surface Water Diversion shall be built pursuant to FGC Section 5937, and only from materials such as clean gravel, which will cause little or no siltation, and shall be approved by the CDFW prior to construction.

2.12 Equipment and Vehicles. Any equipment or vehicles driven and/or operated within or adjacent to the stream/lake shall be checked and maintained daily, to prevent leaks of materials that if introduced to water could be deleterious to aquatic life.

2.13 Stationary Equipment. Stationary equipment such as motors, pumps, generators, and welders, located within or adjacent to the stream/lake shall be positioned over drip pans. Stationary heavy equipment shall have suitable containment to handle a catastrophic spill/leak. Clean up equipment such as extra boom, absorbent pads, skimmers, shall be on site prior to the start of construction.

2.14 Staging and Storage Areas. Staging/storage areas for equipment and materials shall be located outside of the stream/lake. Any materials placed in seasonally dry portions of a stream or lake that could be washed downstream or could be deleterious to aquatic life shall be removed from the Project site prior to inundation by high flows.

DocuSign Envelope ID: CEE599B1-27B7-4607-9980-F1BC7072329B

2.15 Equipment Maintenance. No equipment maintenance shall be done within or near any stream channel or lake margin where petroleum products or other pollutants from the equipment may enter these areas under any flow.

2.16 Trash Abatement and Refuse Removal. Permittee shall ensure that trash and food items are contained in animal-proof containers and removed at the end of each work day to avoid attracting opportunistic predators such as ravens, coyotes, and feral dogs. Upon completion of Project activities within each Project location, Permittee shall remove and properly dispose of all construction refuse, including, but not limited to, broken equipment parts, wrapping material, cords, cables, wire, rope, strapping, twine, buckets, metal or plastic containers, and boxes.

2.17 Pollution and Litter. Permittee shall comply with all litter and pollution laws. All contractors, subcontractors, and employees shall also obey these laws and it shall be the responsibility of Permittee to ensure compliance.

2.17.1 Spoil sites shall not be located within a lake, streambed, or flowing stream or locations that may be subjected to high storm flows, where spoil shall be washed back into a lake, streambed, or flowing stream where it will impact streambed habitat and aquatic or riparian vegetation.

2.17.2 Raw cement/concrete or washings thereof, asphalt, paint, or other coating material, oil or other petroleum products, or any other substances which could be hazardous to fish and wildlife resources resulting from Project related activities shall be prevented from contaminating the soil and/or entering the waters of the State. These materials, placed within or where they may enter a lake, streambed, or flowing stream by Permittee or any party working under contract or with the permission of Permittee, shall be removed immediately.

2.17.3 No broken concrete, cement, debris, soil, silt, sand, bark, slash, sawdust, rubbish, or washings thereof, oil or petroleum products, or other organic or earthen material from any construction or associated activity of whatever nature shall be allowed to enter into or be placed where it may be washed by rainfall or runoff into waters of the State. When operations are completed, any excess materials or debris shall be removed from the work area. No rubbish shall be deposited within 150 feet of the high water mark of any lake, streambed, or flowing stream.

2.17.4 No equipment maintenance shall be done within or near any lake, streambed, or flowing stream where petroleum products or other pollutants from the equipment may enter these areas under any flow.

2.18 Turbidity and Siltation. All equipment that enters the streambed or habitat associated with the stream shall be clean and dry. Upon CDFW determination that turbidity/siltation levels resulting from Project-related activities constitute a threat to

DocuSign Envelope ID: CEE599B1-27B7-4607-9980-F1BC7072329B

aquatic life, activities associated with the turbidity/siltation shall be halted until effective CDFW approved control devices are installed, or abatement procedures are initiated.

2.19 Spill Containment. All activities performed in or near a stream shall have absorbent materials designated for spill containment and cleanup activities on-site for use in an accidental spill. If a spill occurs the Permittee shall immediately notify the California Emergency Management Agency at 1-800-852-7550 and immediately initiate the cleanup activities. CDFW shall also be notified by the Permittee and consulted regarding clean-up procedures.

2.20 Disposal of Vegetation. Following any vegetation clearing/removal activities, Permittee shall immediately chip woody debris to pieces 1-inch in diameter or less and dispose of the materials using one of the following methods: a) solarize with clear tarp, b) compost at a commercial facility, c) burn at a biogeneration facility, or d) send to a landfill (can be utilized as Alternative Daily Coverage). Plant material infested with polyphagous shot hole borer will follow handling procedures found at http://eskalenlab.ucr.edu/handouts/decisionmaking.pdf.

2.21 Excavated Areas. At the end of each work day, Permittee shall, with the oversight of the Designated Biologist or a trained construction management staff, secure any open trench or excavated area within the Project area addressed by this Agreement such that animals are unable to enter and become entrapped. The excavated areas must be secured using appropriate site- and species-specific methods, such as, placing plywood or other barrier materials over the excavated area, placing an escape ramp of suitable material and at an angle no greater than 30 degree at each end of the open trench/excavated area, or installing temporary fencing around the perimeter of trenches or holes.

Invasive Species

2.22 Prohibited Plant Species. Permittee shall not plant, seed or otherwise introduce invasive exotic plant species. Prohibited exotic plant species include those identified in the California Exotic Pest Plant Council's database, which is accessible at: https://www.cal-ipc.org/plants/inventory/.

2.23 Clean Equipment Prior to Entering Area Regulated by Agreement. All Equipment shall be free of materials deleterious to aquatic life including noxious and nuisance weeds, aquatic invasive species, oil, grease, hydraulic fluid, soil and other debris. The Permittee shall follow equipment washing guidelines (see conditions below) and complete the Certification of Clean Equipment. The Certification of Clean Equipment shall be completed by the Permittee for all equipment prior to initially entering areas regulated by this Agreement.

2.24 Inspection of Project Equipment. Permittee shall inspect all vehicles, tools, waders and boots, and other Project-related equipment and remove all visible soil/mud,

DocuSign Envelope ID: CEE599B1-27B7-4607-9980-F1BC7072329B

plant materials, and animal remnants prior to initially entering areas regulated by this Agreement, and upon Equipment Operator recertification following decontamination.

2.25 Decontamination of Project Equipment. Permittee shall decontaminate all tools, waders and boots, vehicles, trailers, and other equipment that will be used in areas regulated by this Agreement and make contact with water or wetted soils prior to initially entering and upon reentering with verification that subsequent decontamination is required with the following specific guidance: Permittee shall decontaminate Project gear and equipment utilizing one of three methods: drying, using a hot water soak, or freezing, as appropriate to the type of gear or equipment. For all methods, Permittee shall begin the decontamination process by thoroughly scrubbing equipment, paying close attention to hard to reach and clean areas with a stiff-bristled brush to remove all plant, seeds, soil, and other organisms. To decontaminate by drying, Permittee shall allow equipment to dry thoroughly (i.e., until there is a complete absence of water and all plant, seeds, and soil), preferably in the sun, for a minimum of 48 hours. To decontaminate using a hot water soak, Permittee shall immerse equipment in 140°F or hotter water and soak for a minimum of 5 minutes. To decontaminate by freezing, Permittee shall place equipment in a freezer 32°F or colder for a minimum of 8 hours. Repeat decontamination is required only if the equipment/clothing is removed from the site, used in contact with water or wet soil within a different watershed, and returned to the Project site.

2.26 Decontamination of Vehicles and Equipment. Permittee shall decontaminate vehicles and other Project-related equipment too large to immerse in a hot water bath by pressure washing with hot water a minimum of 140°F at the point of contact or 155°F at the nozzle. Additionally, Permittee shall flush watercraft engines and all areas that could contain standing water (e.g., storage compartments) for a minimum of 10 minutes. Following the hot water wash, Permittee shall dry all vehicles, watercraft, and other large equipment as thoroughly as possible. Repeat Decontamination is required only if vehicles and/or equipment is removed from the site used in contact with water or wet soil within a different watershed and returned to the Project site.

2.27 Decontamination Sites. Permittee shall perform decontamination of vehicles, watercraft, and other Project gear and equipment in a designated location where runoff can be contained and not allowed to pass into CDFW jurisdictional areas and other sensitive habitat areas. Cleaning of equipment may occur at a location that contains and recycles resulting wastewater.

2.28 Other Project Equipment. Permittee or designee shall require operators of equipment to re-certify equipment upon reentry to areas regulated by this Agreement. Permittee shall require operators of equipment subject to recertification that are reentering after contact with water and/or wet soil from a

DocuSign Envelope ID: CEE599B1-27B7-4607-9980-F1BC7072329B

stream or lake in areas outside those regulated under this Agreement to follow equipment washing guidelines (see measures above).

2.29 Notification of Invasive Species. Permittee shall notify CDFW immediately if an invasive species not previously known to occur within the Project site is discovered during Project activities by submitting a completed Suspect Invasive Species Report (available online at: https://wildlife.ca.gov/Conservation/Invasives/Report) and photos to the Invasive Species Program by email at: invasives@wildlife.ca.gov. Notification may also be provided by calling (866) 440-9530. Upon receiving notification, CDFW will provide Permittee with guidance for further action as appropriate to the species.

3 Compensatory Measures

To compensate for adverse impacts to fish and wildlife resources identified above that cannot be avoided or minimized. Permanent protection and funding for perpetual management of compensatory habitat must be complete before starting Project Activities, or within 18 months of the effective date of this Agreement if a letter of credit or other form of security approved by CDFW is provided pursuant to Measure 3.2 below for all uncompleted obligations.

3.1 Habitat Re-establishment and/or Rehabilitation – Offsite (Mitigation Bank). To compensate for permanent impacts to 0.16 acres of fish and wildlife resources subject to Fish and Game Code section 1600 et seq., Permittee shall purchase no less than 0.32 acres of streambed and riparian habitat rehabilitation credits through a CDFW-approved **mitigation bank**. Mitigation credits shall be purchased, and receipt provided to CDFW, **30 days prior to the initiation of Project activities**, which includes staging and site preparation, unless security is provided pursuant to Measure 3.2.

3.2 Financial Security. If Permittee is unable to purchase credits from a CDFW-approved mitigation bank no later than 30 days prior to initiation of Project activities covered by this Agreement as described in Measure 3.1, Permittee shall provide a Letter of Credit (LOC) in a form acceptable to CDFW, or other form of security approved by CDFW, in an amount sufficient to purchase 0.32 acres of streambed and riparian habitat rehabilitation credits through a CDFW-approved mitigation bank. The LOC shall reference the current costs associated with re-establishment and/or rehabilitation credits. The form and content of the LOC shall be the same or substantially similar to the template attached hereto as Exhibit 2. The LOC shall be **submitted to CDFW for approval and shall be executed 30 days prior to initiation of Project activities**.

3.2.1 Draft Copy of LOC. The Permittee shall provide a draft copy of the LOC to CDFW at the address listed below for review and approval prior to execution. The LOC shall not be executed without CDFW's prior approval.

DocuSign Envelope ID: CEE599B1-27B7-4607-9980-F1BC7072329B

3.2.2 Expiration of LOC. In the event that the LOC will expire before the mitigation obligations have been met, the Permittee shall be responsible for providing CDFW a new LOC to replace the existing LOC at least sixty (60) days prior to the expiration date.

3.2.3 Execution of LOC. Upon execution of the LOC, the Permittee shall provide the original to the address listed on the LOC template, and one copy of the executed document to CDFW at the address listed below under Contact Information.

3.3 Temporary Impacts. The Permittee shall restore all areas within the Project area temporarily impacted by Project activities, such as staging areas and temporary access areas. Temporary impact areas altered during the Project shall be returned to natural contours without creating a possible future bank erosion problem. The Permittee shall remove all temporary infrastructure. Temporary impact areas altered during the project shall be returned to natural contours without creating a possible future bank erosion problem.

4 Reporting Measures

Permittee shall meet each reporting requirement described below.

4.1 Notification Prior to Work. The Permittee shall notify CDFW, in writing, at least five (5) days prior to initiation of Project-related activities and at least five (5) days prior to completion of Project and mitigation activities. Notification shall be sent to CDFW as identified in Measure 4.2.

4.2 Reporting. All surveys, pre- and post- construction notifications, monitoring reports, and any other required communication between the Permittee and CDFW shall be submitted in digital copy to R6LSAReporting@wildlife.ca.gov Reference # 1600-2019-0104-R6, and cc: Eric.Chan@wildlife.ca.gov. If CDFW requests hard copies of any documentation, Permittee shall mail to 3602 Inland Empire Blvd., Suite C-220, Ontario, CA 9764, Attn: Lake and Streambed Alteration Program, Reference # 1600-2019-0104-R6.

4.3 Final Construction Report. Permittee shall provide a final construction report to CDFW no later than **two weeks after the Project is fully completed** including color photographs of before and after Project-related activities, including the surrounding staging areas. The construction report at a minimum shall contain pre-Project photographs, total amount of area impacted post-Project, post-Project photographs, and biological survey notes (including construction monitoring).

4.4 Notification to the California Natural Diversity Data Base (CNDDB). If any sensitive species are observed on or in proximity to the Project site, or during Project surveys, the Permittee shall submit CNDDB forms and maps to the CNDDB **within five working days** of the sightings, and provide the regional

DocuSign Envelope ID: CEE599B1-27B7-4607-9980-F1BC7072329B

CDFW office with copies of the CNDDB forms and survey maps. The CNDDB form is available online at https://www.wildlife.ca.gov/Data/CNDDB/Submitting-Data. A copy of this information will be mailed within five days to the CDFW Region 6, to 3602 Inland Empire Blvd., Suite C-220, Ontario, CA 9764, ATTN: Streambed Unit. Please reference SAA# 1600-2019-0104-R6.

4.5 Compliance. CDFW shall verify compliance with protective measures to ensure the accuracy of the Operator's mitigation, monitoring, and reporting efforts. CDFW may, at its sole discretion, review relevant documents maintained by the Operator, interview the Operator's employees and agents, inspect the work site, and take other actions to assess compliance with or effectiveness of protective measures in this Agreement.

4.6 List of Designated Biologists. The Permittee shall submit a proposed list of Designated Biologists to CDFW for review 30 days prior to Project Start (see Condition 2.1). CDFW will provide written response within 18 days of Permittee submittal, unless otherwise agreed to by CDFW in writing (email, letter, fax). The Permittee may utilize any of the Designated Biologists with the appropriate qualifications from the approved list without subsequent approvals from CDFW. The list may be updated at any time by CDFW or the Permittee with the prior approval of CDFW.

CONTACT INFORMATION

Any communication that Permittee or CDFW submits to the other shall be in writing and any communication or documentation shall be delivered to the address below by U.S. mail, fax, or email, or to such other address as Permittee or CDFW specifies by written notice to the other.

To Permittee:

Margery Lazarus
City of Moreno Valley
14177 Frederick Street
Moreno Valley, CA 92553
margeryl@moval.org

To CDFW:

Department of Fish and Wildlife
Inland Deserts Region
3602 Inland Empire Blvd., Suite C-220
Ontario, CA 9764
Attn: Lake and Streambed Alteration Program – Eric Chan

DocuSign Envelope ID: CEE599B1-27B7-4607-9980-F1BC7072329B

Notification #1600-2019-0104-R6
Eric.Chan@wildlife.ca.gov

LIABILITY

Permittee shall be solely liable for any violations of the Agreement, whether committed by Permittee or any person acting on behalf of Permittee, including its officers, employees, representatives, agents or contractors and subcontractors, to complete the Project or any activity related to it that the Agreement authorizes.

This Agreement does not constitute CDFW's endorsement of, or require Permittee to proceed with the Project. The decision to proceed with the Project is Permittee's alone.

SUSPENSION AND REVOCATION

CDFW may suspend or revoke in its entirety the Agreement if it determines that Permittee or any person acting on behalf of Permittee, including its officers, employees, representatives, agents, or contractors and subcontractors, is not in compliance with the Agreement.

Before CDFW suspends or revokes the Agreement, it shall provide Permittee written notice by certified or registered mail that it intends to suspend or revoke. The notice shall state the reason(s) for the proposed suspension or revocation, provide Permittee an opportunity to correct any deficiency before CDFW suspends or revokes the Agreement, and include instructions to Permittee, if necessary, including but not limited to a directive to immediately cease the specific activity or activities that caused CDFW to issue the notice.

ENFORCEMENT

Nothing in the Agreement precludes CDFW from pursuing an enforcement action against Permittee instead of, or in addition to, suspending or revoking the Agreement.

Nothing in the Agreement limits or otherwise affects CDFW's enforcement authority or that of its enforcement personnel.

OTHER LEGAL OBLIGATIONS

This Agreement does not relieve Permittee or any person acting on behalf of Permittee, including its officers, employees, representatives, agents, or contractors and subcontractors, from complying with, or obtaining any other permits or authorizations that might be required under, other federal, state, or local laws or regulations before beginning the Project or an activity related to it. For example, if the Project causes take of a species listed as threatened or endangered under the Endangered Species Act (ESA), such take will be unlawful under the ESA absent a permit or other form of

DocuSign Envelope ID: CEE599B1-27B7-4607-9980-F1BC7072329B

authorization from the U.S. Fish and Wildlife Service or National Marine Fisheries Service.

This Agreement does not relieve Permittee or any person acting on behalf of Permittee, including its officers, employees, representatives, agents, or contractors and subcontractors, from complying with other applicable statutes in the Fish and Game Code including, but not limited to, Fish and Game Code sections 2050 *et seq*. (threatened and endangered species), section 3503 (bird nests and eggs), section 3503.5 (birds of prey), section 5650 (water pollution), section 5652 (refuse disposal into water), section 5901 (fish passage), section 5937 (sufficient water for fish), and section 5948 (obstruction of stream).

Nothing in the Agreement authorizes Permittee or any person acting on behalf of Permittee, including its officers, employees, representatives, agents, or contractors and subcontractors, to trespass.

AMENDMENT

CDFW may amend the Agreement at any time during its term if CDFW determines the amendment is necessary to protect an existing fish or wildlife resource.

Permittee may amend the Agreement at any time during its term, provided the amendment is mutually agreed to in writing by CDFW and Permittee. To request an amendment, Permittee shall submit to CDFW a completed CDFW “Request to Amend Lake or Streambed Alteration” form and include with the completed form payment of the corresponding amendment fee identified in CDFW’s current fee schedule (see Cal. Code Regs., tit. 14, § 699.5).

TRANSFER AND ASSIGNMENT

This Agreement may not be transferred or assigned to another entity, and any purported transfer or assignment of the Agreement to another entity shall not be valid or effective, unless the transfer or assignment is requested by Permittee in writing, as specified below, and thereafter CDFW approves the transfer or assignment in writing.

The transfer or assignment of the Agreement to another entity shall constitute a minor amendment, and therefore to request a transfer or assignment, Permittee shall submit to CDFW a completed CDFW “Request to Amend Lake or Streambed Alteration” form and include with the completed form payment of the minor amendment fee identified in CDFW’s current fee schedule (see Cal. Code Regs., tit. 14, § 699.5).

EXTENSIONS

In accordance with Fish and Game Code section 1605, subdivision (b), Permittee may request one extension of the Agreement, provided the request is made prior to the expiration of the Agreement’s term. To request an extension, Permittee shall submit to

DocuSign Envelope ID: CEE599B1-27B7-4607-9980-F1BC7072329B

CDFW a completed CDFW "Request to Extend Lake or Streambed Alteration" form and include with the completed form payment of the extension fee identified in CDFW's current fee schedule (see Cal. Code Regs., tit. 14, § 699.5). CDFW shall process the extension request in accordance with Fish and Game Code section 1605, subdivisions (b) through (e).

If Permittee fails to submit a request to extend the Agreement prior to its expiration, Permittee must submit a new notification and notification fee before beginning or continuing the Project the Agreement covers (Fish & G. Code § 1605, subd. (f)).

EFFECTIVE DATE

The Agreement becomes effective on the date of CDFW's signature, which shall be: 1) after Permittee's signature; 2) after CDFW complies with all applicable requirements under the California Environmental Quality Act (CEQA); and 3) after payment of the applicable Fish and Game Code section 711.4 filing fee listed at https://www.wildlife.ca.gov/Conservation/CEQA/Fees.

TERM

This Agreement shall expire on September 10, 2025, unless it is terminated or extended before then. All provisions in the Agreement shall remain in force throughout its term. Permittee shall remain responsible for implementing any provisions specified herein to protect fish and wildlife resources after the Agreement expires or is terminated, as Fish and Game Code section 1605, subdivision (a)(2) requires.

EXHIBITS

The documents listed below are included as exhibits to the Agreement and incorporated herein by reference.

A. Exhibit 1. Project Location
B. Exhibit 2. Project Impacts
C. Exhibit 3. Irrevocable Standby Letter of Credit

AUTHORITY

If the person signing the Agreement (signatory) is doing so as a representative of Permittee, the signatory hereby acknowledges that he or she is doing so on Permittee's behalf and represents and warrants that he or she has the authority to legally bind Permittee to the provisions herein.

AUTHORIZATION

This Agreement authorizes only the Project described herein. If Permittee begins or completes a Project different from the Project the Agreement authorizes, Permittee may

DocuSign Envelope ID: CEE599B1-27B7-4607-9980-F1BC7072329B

be subject to civil or criminal prosecution for failing to notify CDFW in accordance with Fish and Game Code section 1602.

CONCURRENCE

The undersigned accepts and agrees to comply with all provisions contained herein.

FOR CITY OF MORENO VALLEY

DocuSigned by:
Margery A. Lazarus
52A83AAEAFD5434...

9/29/2020

Margery Lazarus
Designated Representative

Date

FOR DEPARTMENT OF FISH AND WILDLIFE

DocuSigned by:
Scott Wilson
8091B1A9242F49C...

10/13/2020

Scott Wilson
Environmental Program Manager

Date

Prepared by: Eric Chan
Environmental Scientist

DocuSign Envelope ID: CEE599B1-27B7-4607-9980-F1BC7072329B

EXHIBIT 1

DocuSign Envelope ID: CEE599B1-27B7-4607-9980-F1BC7072329B

Figure 1. Project Locations

Exhibit 1. Project Location

DocuSign Envelope ID: CEE599B1-27B7-4607-9980-F1BC7072329B

EXHIBIT 2

DocuSign Envelope ID: CEE599B1-27B7-4607-9980-F1BC7072329B

Exhibit 2. Project Impacts

DocuSign Envelope ID: CEE599B1-27B7-4607-9980-F1BC7072329B

EXHIBIT 3

DocuSign Envelope ID: CEE599B1-27B7-4607-9980-F1BC7072329B

[***Financial institution letterhead***]

IRREVOCABLE STANDBY LETTER OF CREDIT
NO. [***number issued by financial institution***]

Issue Date: [***date***]

Beneficiary:

Department of Fish and Wildlife
Habitat Conservation Planning Branch
Post Office Box 944209
Sacramento, CA 94244-2090
Attn: HCPB Contract Coordinator

Amount: U.S. $[***dollar number***] [(***dollar amount***)]

Expiry: [***Date***] at our counters

Dear Sirs:

1. At the request and on the instruction of our customer, [***name of applicant***] ("Applicant"), we, [***name of financial institution***] ("Issuer"), hereby establish in favor of the beneficiary, the California Department of Fish and Wildlife ("CDFW"), this irrevocable standby letter of credit ("Credit") in the principal sum of U.S. $[***dollar number***] [(***dollar amount***)] ("Principal Sum").

2. We are informed this Credit is and has been established for the benefit of CDFW pursuant to the terms of the [***insert:*** "lake" ***or*** "streambed"] alteration agreement (No. [***permit number***]) for the [***name of Project***] issued by CDFW to the Applicant on [***date***] (No. [***number***]) ("Permit").

3. We are further informed that pursuant to the Permit, the Applicant has agreed to complete certain mitigation requirements, as set forth in Conditions [***numbers***] in the Permit ("Mitigation Requirements").

4. We are finally informed that this Credit is intended by CDFW and the Applicant to serve as a security device for the performance by the Applicant of the Mitigation Requirements.

5. CDFW shall be entitled to draw upon this Credit only by presentation of a duly executed Certificate for Drawing ("Certificate") in the same form as Attachment A, which is attached hereto, at our office located at [***name and address of financial institution***].

DocuSign Envelope ID: CEE599B1-27B7-4607-9980-F1BC7072329B

6. The Certificate shall be completed and signed by an "Authorized Representative" of CDFW as defined in paragraph 12 below. Presentation by CDFW of a completed Certificate may be made in person or by registered mail, return receipt requested, or by overnight courier.

7. Upon presentation of a duly executed Certificate as above provided, payment shall be made to CDFW, or to the account of CDFW, in immediately available funds, as CDFW shall specify.

8. If a demand for payment does not conform to the terms and conditions of this Credit, we shall give CDFW prompt notice that the demand for payment was not effected in accordance with the terms and conditions of this Credit, state the reasons therefore, and await further instruction.

9. Upon being notified that the demand for payment was not effected in conformity with the Credit, CDFW may correct any such non-conforming demand for payment under the terms and conditions stated herein.

10. All drawings under this Credit shall be paid with our funds. Each drawing honored by us hereunder shall reduce, *pro tanto*, the Principal Sum. By paying to CDFW an amount demanded in accordance herewith, we make no representations as to the correctness of the amount demanded.

11. This Credit will be cancelled upon receipt by us of Certificate of Cancellation/Reduction, which: (i) shall be in the form of Attachment B, which is attached hereto, and (ii) shall be completed and signed by an Authorized Representative of CDFW, as defined in paragraph 12 below.

12. An "Authorized Representative" shall mean the Director of CDFW; the General Counsel of CDFW; a Regional Manager of CDFW; or the Branch Chief of CDFW's Habitat Conservation Planning Branch.

13. This Credit shall be automatically extended without amendment for additional periods of one year from the present or any future expiration date hereof, unless at least sixty (60) days prior to any such date, we notify CDFW in writing by registered mail, return receipt requested, or by overnight courier that we elect not to consider this Credit extended for any such period.

14. Communications with respect to this Credit shall be in writing and addressed to us at [***name and address of financial institution***], specifically referring upon such writing to this credit by number. The address for notices with respect to this Credit shall be: (i) for CDFW: Department of Fish and Wildlife, Habitat Conservation Planning Branch, Post Office Box 944209, Sacramento, CA 94244-2090, Attn: HCPB Contract Coordinator; and (ii) for the Applicant: [***name and address of applicant***].

15. This Credit may not be transferred.

DocuSign Envelope ID: CEE599B1-27B7-4607-9980-F1BC7072329B

16. This Credit is subject to the International Standby Practices 1998 ("ISP 98"). As to matters not covered by the ISP 98 and to the extent not inconsistent with the ISP 98, this credit shall be governed by and construed in accordance with the Uniform Commercial Code, Article 5 of the State of California.

17. This Credit shall, if not canceled, expire on [***expiration date***], or any extended expiration date.

18. We hereby agree with CDFW that documents presented in compliance with the terms of this Credit will be duly honored upon presentation, as specified herein.

19. This Credit sets forth in full the terms of our undertaking. Such undertaking shall not in any way be modified, amended or amplified by reference to any document or instrument referred to herein or in which this Credit is referred to or to which this Credit relates and any such reference shall not be deemed to incorporate herein by reference any document or instrument.

[***Name of financial institution***]

By: _____
Name: _____
Title: _____
Telephone: _____

DocuSign Envelope ID: CEE599B1-27B7-4607-9980-F1BC7072329B

ATTACHMENT A

IRREVOCABLE STANDBY LETTER OF CREDIT NO. [***number issued by financial institution***]
CERTIFICATE FOR DRAWING

To:

[***Name and address of financial institution***]

Re: [***Insert:*** "Lake" ***or*** "Streambed"] Alteration Agreement (No. [***permit number***])

The undersigned, a duly Authorized Representative of the California Department of Fish and Wildlife ("CDFW"), as defined in paragraph 12 in the above-referenced Irrevocable Standby Letter of Credit ("Credit"), hereby certifies to the Issuer that:

1. [***Insert one of the following statements:*** "In the opinion of CDFW, the Applicant has failed to complete the Mitigation Requirements referenced in paragraph 3 of the Credit." ***or*** "As set forth in paragraph 13, the Issuer has informed CDFW that the Credit will not be extended and the Applicant has not provided CDFW with an equivalent security approved by CDFW to replace the Credit."]

2. The undersigned is authorized under the terms of the Credit to present this Certificate as the sole means of demanding payment on the Credit.

3. CDFW is therefore making a drawing under the Credit in amount of U.S. $_____.

4. The amount demanded does not exceed the Principal Sum of the Credit.

Therefore, CDFW has executed and delivered this Certificate as of the ___day of [***month***], [***year***].

CALIFORNIA DEPARTMENT OF FISH AND WILDLIFE

BY:_____
[***Insert one of the following:*** "DIRECTOR" ***or*** "GENERAL COUNSEL" ***or*** "REGIONAL MANAGER, [NAME OF REGIONAL OFFICE]" ***or*** "BRANCH CHIEF, HABITAT CONSERVATION PLANNING BRANCH"]

DocuSign Envelope ID: CEE599B1-27B7-4607-9980-F1BC7072329B

5 ATTACHMENT B

IRREVOCABLE LETTER OF CREDIT NO. [***number issued by financial institution***]

6 CERTIFICATE FOR CANCELLATION

To:

[***Name of financial institution and address***]

Re: [***Insert:*** "Lake" ***or*** "Streambed"] Alteration Agreement (No. [***permit number***])

The undersigned, a duly Authorized Representative of the California Department of Fish and Wildlife ("CDFW"), as defined in the paragraph 12 in the above-referenced Irrevocable Standby Letter of Credit ("Credit"), hereby certifies to the Issuer that:

1. [***Insert one of the following statements:*** "The Applicant has presented documentary evidence of full compliance with the Mitigation Requirements referenced in paragraph 3 of the Credit." ***or*** "The Applicant has presented documentary evidence of compliance with the following Mitigation Requirement[(***s***)] referenced in paragraph 3 of the Credit: [***insert brief description of requirement(s) or requirement number(s) completed***]." ***or*** "The Applicant has provided CDFW with an equivalent security approved by CDFW to replace the Credit."]

2. [***Insert one of the following statements:*** "CDFW therefore requests the cancellation of the Credit." ***or*** "CDFW therefore requests a reduction in the Principal Sum in the amount of $_____, thereby making the new Principal Sum $_____."]

[***Insert one of the following statements:*** "Therefore, CDFW has executed and delivered this Certificate for Cancellation as of the ____ day of [***month***], [***year***]. ***or*** "Therefore, CDFW has executed and delivered this Certificate for Reduction as of the ____ day of [***month***], [***year***]."]

CALIFORNIA DEPARTMENT OF FISH AND WILDLIFE

BY: _____
[***Insert one of the following:*** "DIRECTOR" ***or*** "GENERAL COUNSEL" ***or*** "REGIONAL MANAGER, [NAME OF REGIONAL OFFICE]" ***or*** "BRANCH CHIEF, HABITAT CONSERVATION PLANNING BRANCH"]

APPENDIX P

RWQCB 401 PERMIT (LINE K-1) 332014

December 7, 2020

Margery Lazarus
City of Moreno Valley
14177 Fredrick Street
Moreno Valley, CA 92552

margeryl@moval.org

AMENDED CLEAN WATER ACT SECTION 401 WATER QUALITY STANDARDS CERTIFICATION FOR THE STATE ROUTE 60/MORENO VALLEY BEACH DRIVE IMPROVEMENT PROJECT, MORENO VALLEY, RIVERSIDE COUNTY (USACE FILE NO. N/A) (SARWQCB WDID NO. 332014-08)

Dear Ms. Lazarus,

On October 11, 2019, Santa Ana Regional Water Quality Control Board (Santa Ana Water Board) staff received from City of Moreno Valley a request to revise the September 10, 2014 Clean Water Act Section 401 Water Quality Standards Certification (Certification) issued for the subject project (Project). The construction permitted by the September 10, 2014 Certification has not been completed because of Project phasing and the Clean Water Act Section 404 Permit covering the Project has expired. We considered your request and have revised the Certification accordingly. Revisions are shown by striking out removed text and underlining added text. Text that is neither stricken nor underlined remains unchanged. This amended Certification replaces the September 10, 2014 Certification issued for this Project.

On April 17, 2014, we received an application for Clean Water Act Section 401 Water Quality Standards Certification (Certification) from the City of Moreno Valley for a project in the City of Moreno Valley, Riverside County. The purpose of the proposed project is to improve the State Route 60/ Moreno Valley Beach Drive Interchange and the Nason Street Overcrossing (Project). A portion of the proposed ~~p~~ Project includes adding a concrete headwall with associated rip rap, for erosion protection, to the existing Line K-1 drainage facility operated by Riverside County Flood Control and Water Conservation District (RCFC&WCD). The Applicant has also submitted a filing fee of $1,408.00, which satisfies this ~~p~~ Project's fee requirement for consideration of a ~~401~~ Certification. This fee amount was determined using the Dredge and Fill Fee Calculator on the State Water Resources Control Board (SWRCB) web site, which is

based on the most current iteration of California Code of Regulations, Division 3, Chapter 9, Article 1, section 2200 (a) (3). This letter responds to your request for certification that the proposed ~~p~~ Project, described in your application and amendment request and summarized below, will comply with State water quality standards outlined in the Water Quality Control Plan for the Santa Ana River Basin (1995) (Basin Plan) and subsequent Basin Plan amendments:

Project Description: To comply with the RCFC&WCD's Moreno Master Drainage Area Plan, Project activities include extending an existing segment of Line K-1, which will convey storm drain flows to the Nason Basin. This basin is located northeast of the SR-60/Nason Street interchange. The approximately 1,700-foot-long Line K-1 storm drain system is located along the north side of Ironwood Avenue from approximately 400 feet west of Pettit Street to Line K (approximately 700 feet west of Moreno Beach Drive). The existing Line K-1 segment that conveys flows southerly beneath Ironwood Avenue consists of a 90-inch diameter pipe and 7-foot by 7-foot reinforced concrete box culvert and associated inlet and outlet. The project involves the installation of approximately 218 cubic yards of ½-ton rock rip rap, adjacent to a newly constructed concrete culvert headwall at the downstream outlet, south of Ironwood Avenue.

The work will take place within Sections 34 & 35 of Township 2 South, Range 3 West, of the U.S. Geological Survey *Sunnymead, CA* 7.5-minute topographic quadrangle map (33° 56' 47.24" N/ -117° 50' 84" W).

Receiving water: Unnamed watercourse that discharges to the Nason Basin. Any discharges from the Nason Basin flow to the Perris Valley Channel and eventually to the San Jacinto River. Perris Valley Channel has the present or potential beneficial uses, including: ~~agricultural supply (AGR), ground water recharge (GWR), municipal and domestic supply (MUN),~~ intermittent water contact recreation (REC1), non-contact water recreation (REC2), intermittent warm freshwater habitat (WARM), wildlife habitat (WILD) and rare, threatened, or endangered species (RARE).

Fill area:

Temporary Impact to Streambed Habitat	0.03 acre	40 linear feet
Permanent Impact to Streambed Habitat	0.04 acre	40 linear feet

Dredge/Fill volume: N/A

Federal permit: NWP 31, Section 404 Non-Notifying Project

You have proposed to mitigate water quality impacts as described in your Certification application. The proposed mitigation is summarized below.

Onsite Water Quality Standards Mitigation Proposed:

- Temporary impacts will be restored to their pre-~~p~~ Project conditions. Vegetation will be restored through natural recruitment.
- Standard water quality related best management practices (BMPs) will be employed during construction activities.

Offsite Water Quality Standards Mitigation Proposed:

- None.

Should the proposed ~~p~~ Project impact state- or federally-listed endangered species or their habitat, implementation of measures identified in consultation with U.S. Fish and Wildlife Service and the California Department of Fish and Wildlife will ensure those impacts are mitigated to an acceptable level. Appropriate BMPs will be implemented to reduce construction-related impacts to Waters of the State.

This ~~Water Quality~~ Certification is subject to the acquisition of all local, regional, state, and federal permits and approvals as required by law. Failure to meet any conditions contained herein, or any conditions contained in any other permit or approval for this project issued by the State of California, or any subdivision thereof, may result in appropriate enforcement action, including imposition of administrative civil liability.

Pursuant to California Code of Regulations (CCR), Title 14, Chapter 3, ~~S~~ section 15096, as a responsible agency, the ~~Regional~~ Santa Ana Water Board is required to consider an Environmental Impact Report or Negative Declaration prepared by the lead agency in determining whether to approve a project. A responsible agency has responsibility for mitigating and avoiding only the direct and indirect environmental effects of those parts of the project which it decides to carry out, finance, or approve. Further, the responsible agency must make findings as required by CCR ~~S~~ sections 15091 and, if necessary, 15093, for each and every significant impact of the project.

As required by CCR ~~S~~ section 15096, the ~~Regional~~ Santa Ana Water Board ~~has~~ considered the Negative Declaration prepared and filed for the proposed ~~p~~ Project on June 29, 2007, and information provided subsequently in the ~~p~~ Project application, in approving this Certification. Additionally, the California Department of Transportation (Caltrans) filed a National Environmental Policy Act Determination on August 18, 2011, which stated ~~s~~ that, based on the examination of the ~~p~~ Project's proposal and supporting information, ~~that~~ Caltrans had ~~s~~ determined the ~~p~~ Project qualified for ~~is~~ a

Categorical Exclusion under Guidelines ~~S~~section 6005 of 23 U.S.C. 327. The ~~Regional~~ Santa Ana Water Board has independently considered ~~the Applicant's~~ both the Negative Determination and Categorical Exclusion ~~Exemption~~ in the issuance of this Certification and independently finds that no changes or alterations to the proposed ~~p~~ Project are necessary to avoid or mitigate impacts to water quality to a less than significant level.

This ~~401~~ Certification is contingent upon the execution of the following conditions:

1) The Applicant ~~must~~ shall comply with the requirements of the applicable Clean Water Act section 404 permit.

2) All materials generated from construction activities associated with this ~~p~~ Project shall be managed appropriately. This shall include identifying all potential pollution sources within the scope of work of this ~~p~~ Project and incorporating all necessary pollution prevention BMPs as they relate to each potential pollution source identified.

3) The Applicant ~~project proponent~~ shall utilize BMPs during ~~p~~ Project construction to minimize the controllable discharges of sediment and other wastes to drainage systems or other waters of the ~~s~~ State and of the United States.

4) Substances resulting from ~~p~~ Project-related activities that could be harmful to aquatic life, including, but not limited to, petroleum lubricants and fuels, cured and uncured cements, epoxies, paints and other protective coating materials, Portland cement concrete or asphalt concrete, and washings and cuttings thereof, shall not be discharged to soils or waters of the ~~s~~ State. All waste concrete shall be removed.

5) Motorized equipment shall not be maintained or parked within or near any stream crossing, channel or lake margin in such a manner that petroleum products or other pollutants from the equipment may enter these areas under any flow conditions. Vehicles shall not be driven or equipment operated in waters of the ~~s~~ State on-site, except as necessary to complete the proposed project. No equipment shall be operated in areas of flowing water.

6) This ~~Water Quality~~ Certification is subject to the acquisition of all local, regional, ~~s~~ State, and federal permits and approvals as required by law. Failure to meet any conditions contained herein or any the conditions contained in any other permit or approval issued by the State of California or any subdivision thereof may result in the revocation of this Certification and civil or criminal liability.

7) BMPs ~~est management practices~~ to stabilize disturbed soils shall ~~must~~ include the use of native plant species whenever feasible.

8) Applicant shall ensure that all fees associated with this ~~p~~ Project ~~shall~~ be paid to each respective agency prior to conducting any on-site construction activities.

9) This Certification will remain valid until the U.S. Army Corps of Engineers (USACE) 2017 Nationwide Permits expire on March 18, 2022, or through an extended period beyond the expiration date that is authorized in writing by the USACE.

10) The Applicant shall submit an Annual Report each year on the anniversary of the effective date of the amended Certification. Annual reporting shall continue until a Notice of Project Complete Letter is issued to the Applicant.

11) The Applicant shall submit a Commencement of Construction Report at least seven (7) days prior to start of Construction.

12) The Applicant shall submit a Request for Notice of Project Complete Letter when maintenance and any required post-construction monitoring is complete and no further Project activities will occur. This request shall be submitted to Santa Ana Water Board staff within thirty (30) days following completion of all Project activities. Upon approval of the request, the Santa Ana Water Board staff will issue to the Applicant a Notice of Project Complete Letter, which will end the post discharge monitoring period and associated annual fees.

Under California Water Code, ~~S~~ section 1058, and ~~P~~ pursuant to title 23 CCR ~~§~~section 3860, the following shall be included as conditions of all water quality certification actions:

(a) Every certification action is subject to modification or revocation upon administrative or judicial review, including review and amendment pursuant to ~~S~~ section ~~§~~13330 of the Water Code and Article 6 (commencing with ~~S~~ section 3867) of this Chapter.

(b) Certification is not intended and shall not be construed to apply to any activity involving a hydroelectric facility and requiring a FERC license or an amendment to a FERC license unless the pertinent certification application was filed pursuant to ~~S~~ subsection ~~§~~3855(b) of this Chapter and that application specifically identified that a FERC license or amendment to a FERC license for a hydroelectric facility was being sought.

(c) Certification is conditioned upon total payment of any fee required under this Chapter and owed by the Applicant.

If the above stated conditions are changed, any of the criteria or conditions as previously described are not met, or new information becomes available that indicates a water quality problem, the ~~Regional~~ Santa Ana Water Board may require the Applicant to submit a report of waste discharge and obtain Waste Discharge Requirements.

In the event of any violation or threatened violation of the conditions of this ~~c~~ Certification, the holder of any permit or license subject to this ~~c~~ Certification shall be subject to any remedies, penalties, process or sanctions as provided for under state law. For purposes of section 401(d) of the Clean Water Act, the applicability of any state law authorizing remedies, penalties, process or sanctions for the violation or threatened violation constitutes a limitation necessary to assure compliance with the water quality standards and other pertinent requirements incorporated into this certification. Violations of the conditions of this certification may subject the Applicant to civil liability pursuant to Water Code sections 13350 and/or 13385.

This letter constitutes a Water Quality Standards Certification issued pursuant to Clean Water Act Section 401. I hereby certify that any discharge from the referenced project will comply with the applicable provisions of Sections 301 (Effluent Limitations), 302 (Water Quality Related Effluent Limitations), 303 (Water Quality Standards and Implementation Plans), 306 (National Standards of Performance), and 307 (Toxic and Pretreatment Effluent Standards) of the Clean Water Act, and with other applicable requirements of State law.

This discharge is also regulated under SWRCB ~~State Water Resources Control Board~~ Order No. 2003-0017-DWQ (Order No. 2003-0017-DWQ), "Statewide General Waste Discharge Requirements for Dredged or ~~and~~ Fill Discharges That Have Received State Water Quality Certification," which requires compliance with all conditions of this Water Quality Standards Certification. Order No. 2003-0017-DWQ is available at: www.waterboards.ca.gov/board_decisions/adopted_orders/water_quality/2003/wqo/wqo2003-0017.pdf.

Should there be any questions, please contact Jason Bill at (951) 782-3295 or Jason.Bill@Waterboards.ca.gov ~~Marc Brown at (951) 321-4584~~, or David Woelfel at (951) 782-7960 or David.Woelfel@waterboards.ca.gov ~~Mark Adelson at (951) 782-3234~~.

Sincerely,

Hope Smythe
Water Boards
Digitally signed by Hope Smythe
Date: 2020.12.07 13:43:33 -08'00'

Hope A. Smythe
Executive Officer
Santa Ana Regional Water Quality Control Board

cc (via electronic mail):

USACE, Regulatory Division, Los Angeles District - James Mace
James.E.Mace@usace.army.mil
U.S. Environmental Protection Agency, Region 9 – Wetlands Section –
Melissa Scianni -- Scianni.Melissa@epa.gov
U.S. Fish and Wildlife Service - James Theide - James_Thiede@fws.gov
California Department of Fish and Wildlife – Carly Beck -
Carly.Beck@wildlife.ca.gov
California Department of Fish and Wildlife – Eric Chan -
Eric.Chan@wildlife.ca.gov
Caltrans – Antonia Toledo - Antonia.Toledo@dot.ca.gov
SWRCB, Office of Chief Counsel – Teresita Sablan
Teresita.Sablan@waterboards.ca.gov
SWRCB, Division of Water Quality -- Water Quality Certification Unit –
Stateboard401@waterboards.ca.gov
Santa Ana Water Board – David Woelfel – David.Woelfel@waterboards.ca.gov

CALIFORNIA
Water Boards

EDMUND G. BROWN JR.
GOVERNOR

MATTHEW RODRIQUEZ
SECRETARY FOR
ENVIRONMENTAL PROTECTION

Santa Ana Regional Water Quality Control Board

RECEIVED

SEP 11 2014

PUBLIC WORKS DEPARTMENT
CAPITAL PROJECTS DIVISION

September 10, 2014

Margery Lazarus
City of Moreno Valley
14177 Fredrick Street
Moreno Valley, CA 92552

CLEAN WATER ACT SECTION 401 WATER QUALITY STANDARDS CERTIFICATION FOR THE STATE ROUTE 60/MORENO VALLEY BEACH DRIVE IMPROVEMENT PROJECT, MORENO VALLEY, RIVERSIDE COUNTY (ACOE CORPS FILE NO. N/A) (SARWQCB PROJECT NO. 332014-08)

Dear Ms. Lazarus,

On April 17, 2014, we received an application for Clean Water Act Section 401 Water Quality Standards Certification ("Certification) from the City of Moreno Valley for a project in the City of Moreno Valley, Riverside County. The purpose of the proposed project is to improve the State Route 60/ Moreno Valley Beach Drive Interchange and the Nason Street Overcrossing (Project). A portion of the proposed project includes adding a concrete headwall with associated rip rap, for erosion protection, to the existing Line K-1 drainage facility operated by Riverside County Flood Control and Water Conservation District (RCFC&WCD). The applicant has also submitted a filing fee of $1,408.00, which satisfies this project's fee requirement for consideration of a 401 Certification. This fee amount was determined using the Dredge and Fill Fee Calculator on the State Water Resources Control Board (SWRCB) web site, which is based on the most current iteration of California Code of Regulations, Division 3, Chapter 9, Article 1, section 2200 (a) (3). This letter responds to your request for certification that the proposed project, described in your application and summarized below, will comply with State water quality standards outlined in the Water Quality Control Plan for the Santa Ana River Basin (1995) (Basin Plan) and subsequent Basin Plan amendments:

Project Description: To comply with the RCFC&WCD's Moreno Master Drainage Area Plan, Project activities include extending an existing segment of Line K-1, which will convey storm drain flows to the Nason Basin. This basin is located northeast of the SR-60/Nason Street interchange. The approximately 1,700 foot long Line K-1 storm drain system is located along the north side of Ironwood Avenue from approximately 400 feet west of Pettit Street to Line K (approximately 700 feet west of Moreno Beach Drive). The existing Line K-1 segment that conveys flows southerly beneath Ironwood Avenue consists

of a 90-inch diameter pipe and 7-foot by 7-foot reinforced concrete box culvert and associated inlet and outlet. The project involves the installation of approximately 218 cubic yards of 1/2 ton rock rip rap, adjacent to a newly constructed concrete culvert headwall at the downstream outlet, south of Ironwood Avenue.

The work will take place within Sections 34 & 35 of Township 2 South, Range 3 West, of the U.S. Geological Survey *Sunnymead, CA* 7.5 minute topographic quadrangle map (33° 56' 47.24" N/ -117° 50' 84" W).

Receiving water: Unnamed watercourse that discharges to the Nason Basin. Any discharges from the Nason Basin flow to the Perris Valley Drain and eventually to the SanJacinto River. These watercourses have present or potential beneficial uses, including: agricultural supply (AGR), ground water recharge (GWR), municipal and domestic supply (MUN), water contact recreation (REC1), non-contact water recreation (REC2), warm freshwater habitat (WARM), and wildlife habitat (WILD).

Fill area:

Temporary Impact to Streambed Habitat	0.03 acre	40 linear feet
Permanent Impact to Streambed Habitat	0.04 acre	40 linear feet

Dredge/Fill volume: N/A

Federal permit: NWP 31, Section 404 Non-Notifying Project

You have proposed to mitigate water quality impacts as described in your Certification application. The proposed mitigation is summarized below:

Onsite Water Quality Standards Mitigation Proposed:

- Temporary impacts will be restored to their pre-project conditions. Vegetation will be restored through natural recruitment.
- Standard water quality related best management practices (BMPs) will be employed during construction activities.

Offsite Water Quality Standards Mitigation Proposed:

- None.

Should the proposed project impact state- or federally-listed endangered species or their habitat, implementation of measures identified in consultation with U.S. Fish and Wildlife Service and the California Department of Fish and Wildlife will ensure those impacts are mitigated to an acceptable level. Appropriate BMPs will be implemented to reduce construction-related impacts to Waters of the State.

This Water Quality Certification is subject to the acquisition of all local, regional, state, and federal permits and approvals as required by law. Failure to meet any conditions contained herein, or any conditions contained in any other permit or approval for this project issued by the State of California, or any subdivision thereof, may result in appropriate enforcement action, including imposition of administrative civil liability.

Pursuant to California Code of Regulations, Title 14, Chapter 3, Section 15096, as a responsible agency, the Regional Board is required to consider an EIR or Negative Declaration prepared by the lead agency in determining whether to approve a project. A responsible agency has responsibility for mitigating and avoiding only the direct and indirect environmental effects of those parts of the project which it decides to carry out, finance, or approve. Further, the responsible agency must make findings as required by Sections 15091 and, if necessary, 15093, for each and every significant impact of the project.

As required by Section 15096, the Regional Board has considered the Negative Declaration prepared and filed for the proposed project on June 29, 2007, and information provided subsequently in the project application, in approving this Certification. Additionally, Caltrans filed a NEPA Determination on August 18, 2011, which states that based on the examination of the project's proposal and supporting information, that Caltrans has determined the project is a Categorical Exclusion under Guidelines Section 6005 of 23 U.S.C. 327. The Regional Board has independently considered the applicant's Categorical Exemption in the issuance of this Certification and independently finds that no changes or alterations to the proposed project are necessary to avoid or mitigate impacts to water quality to a less than significant level.

This 401 Certification is contingent upon the execution of the following conditions:

1) The applicant must comply with the requirements of the applicable Clean Water Act section 404 permit.

2) All materials generated from construction activities associated with this project shall be managed appropriately. This shall include identifying all potential pollution sources within the scope of work of this project, and incorporating all necessary pollution prevention BMPs as they relate to each potential pollution source identified.

3) The project proponent shall utilize BMPs during project construction to minimize the controllable discharges of sediment and other wastes to drainage systems or other waters of the state and of the United States.

4) Substances resulting from project-related activities that could be harmful to aquatic life, including, but not limited to, petroleum lubricants and fuels, cured and uncured cements, epoxies, paints and other protective coating materials, portland cement concrete or asphalt concrete, and washings and cuttings thereof, shall not be discharged to soils or waters of the state. All waste concrete shall be removed.

5) Motorized equipment shall not be maintained or parked within or near any stream crossing, channel or lake margin in such a manner that petroleum products or other pollutants from the equipment may enter these areas under any flow conditions. Vehicles shall not be driven or equipment operated in waters of the state on-site, except as necessary to complete the proposed project. No equipment shall be operated in areas of flowing water.

6) This Water Quality Certification is subject to the acquisition of all local, regional, state, and federal permits and approvals as required by law. Failure to meet any conditions contained herein or any the conditions contained in any other permit or approval issued by the State of California or any subdivision thereof may result in the revocation of this Certification and civil or criminal liability.

7) Best management practices to stabilize disturbed soils must include the use of native plant species whenever feasible.

8) Applicant shall ensure that all fees associated with this project shall be paid to each respective agency prior to conducting any on-site construction activities.

Under California Water Code, Section 1058, and Pursuant to 23 CCR §3860, the following shall be included as conditions of all water quality certification actions:

(a) Every certification action is subject to modification or revocation upon administrative or judicial review, including review and amendment pursuant to

Section §13330 of the Water Code and Article 6 (commencing with Section 3867) of this Chapter.

(b) Certification is not intended and shall not be construed to apply to any activity involving a hydroelectric facility and requiring a FERC license or an amendment to a FERC license unless the pertinent certification application was filed pursuant to Subsection §3855(b) of this Chapter and that application specifically identified that a FERC license or amendment to a FERC license for a hydroelectric facility was being sought.

(c) Certification is conditioned upon total payment of any fee required under this Chapter and owed by the applicant.

If the above stated conditions are changed, any of the criteria or conditions as previously described are not met, or new information becomes available that indicates a water quality problem, the Regional Board may require the applicant to submit a report of waste discharge and obtain Waste Discharge Requirements.

In the event of any violation or threatened violation of the conditions of this certification, the holder of any permit or license subject to this certification shall be subject to any remedies, penalties, process or sanctions as provided for under state law. For purposes of section 401(d) of the Clean Water Act, the applicability of any state law authorizing remedies, penalties, process or sanctions for the violation or threatened violation constitutes a limitation necessary to assure compliance with the water quality standards and other pertinent requirements incorporated into this certification. Violations of the conditions of this certification may subject the applicant to civil liability pursuant to Water Code section 13350 and/or 13385.

This letter constitutes a Water Quality Standards Certification issued pursuant to Clean Water Act Section 401. I hereby certify that any discharge from the referenced project will comply with the applicable provisions of Sections 301 (Effluent Limitations), 302 (Water Quality Related Effluent Limitations), 303 (Water Quality Standards and Implementation Plans), 306 (National Standards of Performance), and 307 (Toxic and Pretreatment Effluent Standards) of the Clean Water Act, and with other applicable requirements of State law.

This discharge is also regulated under State Water Resources Control Board Order No. 2003-0017-DWQ (Order No. 2003-0017-DWQ), "General Waste Discharge Requirements for Dredge and Fill Discharges That Have Received Water Quality Certification" which requires compliance with all conditions of this Water Quality Standards Certification. Order No. 2003-0017-DWQ is available at: www.waterboards.ca.gov/board_decisions/adopted_orders/water_quality/2003/wqo/wqo2003-0017.pdf

Should there be any questions, please contact Marc Brown at (951) 321-4584, or Mark Adelson at (951) 782-3234.

Sincerely,

Kurt V. Berchtold
Executive Officer
Santa Ana Regional Water Quality Control Board

cc (via electronic mail):
Parsons – Ryan Todaro – ryan.todaro@parsons.com
U. S. Army Corps of Engineers, Los Angeles Office – Jim Mace
CA Department of Fish and Wildlife – Joanna Gibson
State Water Resources Control Board, Office of Chief Counsel-David Rice
State Water Resources Control Board DWQ -Water Quality Certification Unit
U.S. EPA -Supervisor of the Wetlands Regulatory Office WTR-8

APPENDIX Q

RWQCB 401 PERMIT (60MB) 332019

January 7, 2021

Ms. Margery Lazarus
City of Moreno Valley
14177 Frederick Street
Moreno Valley, CA 92552

margeryl@moval.org

CLEAN WATER ACT SECTION 401 WATER QUALITY CERTIFICATION AND ORDER FOR THE STATE ROUTE 60/MORENO BEACH DRIVE INTERCHANGE PROJECT, PHASE 2 (SARWQCB WDID # 332019-30)

Dear Ms. Lazarus:

Enclosed please find a Clean Water Act Section 401 Water Quality Certification and Order, authorized by Santa Ana Regional Water Quality Control Board Executive Officer, Hope A. Smythe. This Order is issued to you for the State Route 60/Moreno Beach Drive Interchange Project, Phase 2 (Project). Attachments A through C of the Enclosure are also part of the Order.

This Order is issued in response to an application submitted on behalf of the City of Moreno Valley for the proposed Project discharge to waters of the State to ensure that the water quality standards for all waters of the State impacted by the Project are met. You may proceed with your Project according to the terms and conditions of the enclosed Order.

If you require further assistance, please contact me by phone at (951) 782-3204 or by email at Maher.Zaher@waterboards.ca.gov. You may also contact David Woelfel, Chief of Regional Planning Programs Section, by phone at (951) 782-7960 or by email at David.Woelfel@waterboards.ca.gov.

Sincerely,

Maher Zaher Digitally signed by Maher Zaher Date: 2021.01.07 11:41:30 -08'00'

Maher Zaher
Water Resource Control Engineer
Regional Planning Programs Section
Santa Ana Regional Water Quality Control Board

Enclosures (1): Order for State Route 60/Moreno Beach Drive Interchange Project, Phase 2

cc: [Via email only] (w/ enclosure):

U.S. Army Corps of Engineers, Jim Mace – James.E.Mace@usace.army.mil
U.S. Environmental Protection Agency, Region 9 – Wetlands Section – Melissa Scianni -- Scianni.Melissa@epa.gov
U.S. Fish and Wildlife Service – James Thiede – James_Thiede@fws.gov
California Department of Fish and Wildlife – Eric Chan – Eric.Chan@wildlife.ca.gov
California Department of Fish and Wildlife – Carley Beck - Carley.Beck@wildlife.ca.gov
California Department of Transportation – Antonia Toledo – Antonia.Toledo@dot.ca.gov
State Water Resource Control Board, Office of Chief Counsel -- Teresita Sablan – Teresita.Sablan@waterboards.ca.gov
State Water Resources Control Board, Division of Water Quality -- Water Quality Certification Unit – Stateboard401@waterboards.ca.gov
Santa Ana Regional Water Quality Control Board – David Woelfel – David.Woelfel@waterboards.ca.gov
Parsons Corporation – Elizabeth Kempton – Elizabeth.Kempton@parsons.com

CLEAN WATER ACT SECTION 401 WATER QUALITY CERTIFICATION AND ORDER

Reg. Meas. ID:	435308
Place ID:	862659
SARWQCB WDID:	332019-30
USACE #:	Not available

Effective Date: January 7, 2021

Program Type: Fill/Excavation

Project Type: Roads and Highways

Project: State Route 60/Moreno Beach Drive Interchange Project, Phase 2 (Project)

Federal Permit: United States Army Corps of Engineers (USACE) Nationwide Permit (NWP) 14, Linear Transportation Project

Applicant: City of Moreno Valley

Applicant Contact: Margery Lazarus, Senior Engineer
14177 Frederick Street
Moreno Valley, California 92552
Phone: (951) 413-3133
Email: margeryl@moval.org

Applicant's Agent: Elizabeth Kempton, Principal Biologist
100 West Walnut Street
Pasadena, California 91124
Phone: (909) 806-4198
Email: elizabeth.kempton@parsons.com

Water Board Staff: Maher Zaher, Water Resource Control Engineer
3737 Main Street, Suite 500
Riverside, California 92501
Phone: (951) 782-3204
Email: Maher.Zaher@waterboards.ca.gov

Water Board Contact Person:
If you have any questions, please call Santa Ana Regional Water Quality Control Board (Santa Ana Water Board) staff listed above or (951) 782-4130 and ask to speak with the Regional Planning Programs Section Chief.

Table of Contents

I. Order 3

II. Public Notice 3

III. Project Purpose 3

IV. Project Description 3

V. Project Location 4

VI. Project Impact and Receiving Waters Information 4

VII. Description of Direct Impacts to Waters of the State 4

VIII. Compensatory Mitigation 5

IX. California Environmental Quality Act (CEQA) 5

X. Petitions for Reconsideration 5

XI. Fees Received 5

XII. Conditions 5

XIII. Certification Deviation 14

XIV. Water Quality Certification 14

Attachment A Project Map(s)
Attachment B Report and Notification Requirements
Attachment C Signatory Requirements

I. Order

This Clean Water Act (CWA) section 401 Water Quality Certification action and Order (Order) is issued at the request of the City of Moreno Valley (herein after Permittee) for the Project. This Order is for the purpose described in the application and supplemental information submitted by the Permittee. The Phase 1 project, as noted on the map in Attachment A, already received approval through a separate order under SARWQCB WDID # 332014-08. The application for the current Project (Phase 2) was received on October 30, 2019. The application was deemed complete on December 31, 2020. Prior to receiving a complete application, Santa Ana Water Board staff issued a notice of incomplete application, and the Permittee responded to the request for application information as summarized on Table 1.

Table 1: Record of Notice(s) of Incomplete Application

Date of Notice of Incomplete Application	Date Requested Information Received
12/30/2019	11/17/2020

Santa Ana Water Board staff requested additional information necessary to supplement the contents of the complete application, and the Permittee responded to the request for supplemental information on the following dates provided in Table 2.

Table 2: Record of Supplemental Application Information

Date of Request for Supplemental Information	Date Requested Information Received
1/4/2021	1/4/2021

II. Public Notice

The Santa Ana Water Board provided public notice of the application pursuant to California Code of Regulations, title 23, section 3858 from November 4, 2019 to the effective date of the Order. The Santa Ana Water Board did not receive any comments during the comment period.

III. Project Purpose

The Project purpose is to perform operational improvements to facilitate movement of traffic at and near the interchange of State Route 60 (SR-60) and Moreno Beach Drive. The Project would alleviate existing traffic congestion and address deficiencies of the existing roadway. The proposed Project is needed to improve the safety of the interchange.

IV. Project Description

The Project proposes the construction of a westbound off-ramp to Moreno Beach Drive, north of SR-60. Additional Project activities at Moreno Beach Drive would include a loop on-ramp with an auxiliary lane for northbound traffic and a direct on-ramp for southbound traffic proposed for vehicles to complete the southbound to westbound SR-60 movement.

The existing two-lane bridge would be replaced with a new overcrossing that would provide additional through lanes and a dedicated left-turn lane with sidewalks, as well as minimal shoulders that would accommodate bicycles in each direction. Additionally, SR-60 would be widened in the westbound direction to provide an auxiliary lane.

Three ephemeral drainages transect the Project area. To complete the proposed Project, permanent grading and fill would occur at three site features, Drainage 2.3, Drainage 2.4, and Drainage 3.2, as outlined in the site map provided in Attachment A (note that other drainages on the map refer to the Phase 1 project that received prior approval).

V. Project Location

The Project is located at the intersection of SR-60 and Moreno Beach Drive, City of Moreno Valley in Riverside County in Section 3 of Township 3 South, Range 3 West in the United States Geological Survey (USGS) Sunnymead 7.5-minute quadrangle topographic map (33.93482 °N / -117. 15408 °W). The Project is located within the San Jacinto watershed. A map showing the Project location is found in Attachment A of this Order.

VI. Project Impact and Receiving Waters Information

The Project is located within the jurisdiction of the Santa Ana Water Board. Receiving waters and groundwater potentially impacted by this Project are protected in accordance with the Water Quality Control Plan for the Santa Ana River Basin (1995) and subsequent amendments (Basin Plan) and other plans and policies. The Basin Plan includes water quality standards, which consist of existing and potential beneficial uses of waters of the State, water quality objectives to protect those uses, and the State and federal antidegradation policies.

Receiving Water:	Unnamed tributary to San Jacinto River (Reach 3), Perris Valley Channel
Existing or Potential Beneficial Uses:	Water Contact Recreation (REC1), Non-contact Water Recreation (REC2), Warm Freshwater Habitat (WARM), Wildlife Habitat (WILD), Rare, Threatened, or Endangered Species (RARE)

VII. Description of Direct Impacts to Waters of the State

Direct impacts to waters of the State would occur at three Project features, referred to as Drainage 2.3, Drainage 2.4, and Drainage 3.2 in the site map provided in Attachment A. Grading and fill activities at the mentioned features would result in 0.61 acre of impacts at Drainage 2.3, 0.17 acre of impacts at Drainage 2.4, and 0.41 acre of impacts at Drainage 3.2. Direct impacts would include the discharge of rip-rap rock and construction materials associated with roadways and on-ramps, such as concrete, asphalt and rebar.

Total Project fill/excavation quantities for all impacts are summarized in Table 1. Permanent impacts are categorized as those resulting in a physical loss in area and also those degrading ecological condition only.

Table 3: Total Project Fill/Excavation Quantity									
Aquatic Resource Type	Temporary Impact[1]			Permanent Impact					
				Physical Loss of Area			Degradation of Ecological Condition Only		
	Acres	CY[2]	LF	Acres	CY	LF	Acres	CY	LF
Riparian Zone	-	-	-	0.96	-	1121.43	-	-	-
Stream Channel	-	-	-	0.23	-	560.70	-	-	-

VIII. Compensatory Mitigation

The Permittee has agreed to provide compensatory mitigation described in section XII.H for the permanent physical loss of, the permanent degradation of ecological condition of, and temporary impacts to waters of the State.

IX. California Environmental Quality Act (CEQA)

On July 16, 2007, the California Department of Transportation, District 8, as lead agency, adopted an Initial Study/Mitigated Negative Declaration (IS/MND) for the Project and filed a Notice of Determination at the Clerk of the Board of Supervisors, County of Riverside on March 8, 2008. As required by California Code of Regulations, title 14, section 15096, in approving this Certification, the Santa Ana Water Board has considered the IS/MND adopted by the California Department of Transportation, District 8, and subsequent information provided by the Permittee. More specifically, the Santa Ana Water Board considered those sections of the IS/MND pertaining to impacts to water quality standards. Based on the mitigation proposed in the IS/MND and the Conditions set forth in this Certification, potentially adverse impacts to water quality standards should be reduced to a less than significant level and beneficial uses protected, if all stated mitigation and conditions are performed.

X. Petitions for Reconsideration

Any person aggrieved by this action may petition the State Water Resources Control Board to reconsider this Order in accordance with California Code of Regulations, title 23, section 3867. A petition for reconsideration must be submitted in writing and received within thirty (30) calendar days of the issuance of this Order.

XI. Fees Received

An application fee of $1638.00 was received on October 30, 2019. The fee amount was determined as required by California Code of Regulations, title 23, sections 3833(b)(3) and 2200(a)(3) and was calculated as category A - Fill & Excavation Discharges (fee code 84) with the dredge and fill fee calculator.

XII. Conditions

The Santa Ana Water Board has independently reviewed the record of the Project to analyze impacts to water quality and designated beneficial uses within the watershed of the Project. In accordance with this Order, the Permittee may proceed with the Project under the following terms and conditions:

[1] Includes only temporary direct impacts to waters of the State and does not include upland areas of temporary disturbance, which could result in a discharge to waters of the State.

[2] Cubic Yards (CY); Linear Feet (LF)

A. Authorization

Impacts to waters of the State shall not exceed quantities shown in Table 3.

B. Reporting and Notification Requirements

The following section details the reporting and notification types and timing of submittals. Requirements for the content of these reporting and notification types are detailed in Attachment B, including specifications for photo and map documentation during the Project construction. Written reports and notifications shall be submitted using the *Reporting and Notification Cover Sheet* located in Attachment B and signed by the Permittee or an authorized representative.

1. **Project Reporting:**

   a. **Annual Reporting.** The Permittee shall submit an Annual Report each year on the anniversary of the effective date. Annual reporting shall continue until a *Notice of Project Complete Letter* is issued to the Permittee.

2. **Project Status Notifications:**

   a. **Commencement of Construction.** The Permittee shall submit a *Commencement of Construction Report* at least seven (7) days prior to start of initial ground disturbance activities.

   b. **Request for Notice of Completion of Discharges Letter.** The Permittee shall submit a *Request for Notice of Completion of Discharges Letter* following completion of active Project construction activities, including any required restoration and Permittee-responsible mitigation. This request shall be submitted to the Santa Ana Water Board staff within thirty (30) days following completion of all Project construction activities. Upon acceptance of the request, Santa Ana Water Board staff will issue to the Permittee a *Notice of Completion of Discharges Letter*, which will end the active discharge period and, if appropriate, associated annual fees.

   c. **Request for Notice of Project Complete Letter.** The Permittee shall submit a *Request for Notice of Project Complete Letter* when construction and any required post-construction monitoring is complete[3] and no further Project activities will occur. This request shall be submitted to Santa Ana Water Board staff within thirty (30) days following completion of all Project activities. Upon approval of the request, the Santa Ana Water Board staff will issue to the Permittee a *Notice of Project Complete Letter*, which will end the post discharge monitoring period and associated annual fees.

3. **Conditional Notifications and Reports:** The following notifications and reports are required as appropriate.

[3] Completion of post-construction monitoring will be determined by Santa Ana Water Board staff and will be contingent on successful attainment of restoration and mitigation performance criteria.

a. Accidental Discharges of Hazardous Materials.[4] Following an accidental discharge of a reportable quantity of a hazardous material, sewage, or an unknown material, the following applies (Water Code, section 13271):

i. As soon as (A) the Permittee has knowledge of the discharge or noncompliance, (B) notification is possible, and (C) notification can be provided without substantially impeding cleanup or other emergency measures, then the Permittee shall:

- first call – 911 (to notify local response agency)
- then call – Office of Emergency Services (OES) State Warning Center at (800) 852-7550 or (916) 845-8911
- lastly follow the required OES procedures as set forth in the *California Hazardous Materials Spill / Release Notification Guidance*

ii. Following notification to OES, the Permittee shall notify Santa Ana Water Board, as soon as practicable (ideally within twenty-four [24] hours). Notification may be via telephone, email, delivered written notice, or other verifiable means.

iii. Within five (5) working days of notification to the Santa Ana Water Board, the Permittee shall submit an *Accidental Discharge of Hazardous Material Report.*

b. Violation of Compliance with Water Quality Standards. The Permittee shall notify the Santa Ana Water Board of any event causing a violation of compliance with water quality standards. Notification may be via telephone, email, delivered written notice, or other verifiable means.

i. Examples of noncompliance events include lack of storm water treatment following a rain event, discharges causing a visible plume in a water of the State, and water contact with uncured concrete.

ii. This notification shall be followed within three (3) working days by submission of a *Violation of Compliance with Water Quality Standards Report* to the Santa Ana Water Board.

c. In-Water Work.

i. The Permittee shall notify the Santa Ana Water Board at least forty-eight (48) hours prior to initiating work in water or stream diversions. Notification may be via telephone, email, delivered written notice, or other verifiable means.

ii. Within three (3) working days following completion of work in water or stream diversions, an *In-Water Work/Diversions Water Quality Monitoring Report* shall be submitted to Santa Ana Water Board staff.

[4] "Hazardous material" means any material that, because of its quantity, concentration, or physical or chemical characteristics, poses a significant present or potential hazard to human health and safety or to the environment if released into the workplace or the environment. "Hazardous materials" include, but are not limited to, hazardous substances, hazardous waste, and any material that a handler or the administering agency has a reasonable basis for believing that it would be injurious to the health and safety of persons or harmful to the environment if released into the workplace or the environment. (Health and Safety Code, section 25501)

d. **Modifications to Project.** Project modifications may require an amendment of this Order. The Permittee shall give advance notice to Santa Ana Water Board staff by submitting a *Modifications to Project Report*, if Project implementation as described in the application materials is altered in any way or by the imposition of subsequent permit conditions by any local, State, or federal regulatory authority. The Permittee shall inform Santa Ana Water Board staff of any Project modifications that will interfere with the Permittee's compliance with this Order. Notification may be made in accordance with conditions in the Certification Deviation section of this Order.

e. **Transfer of Property Ownership.** This Order is not transferable in its entirety or in part to any person or organization except after notice to the Santa Ana Water Board in accordance with the following terms:

   i. The Permittee shall notify the Santa Ana Water Board by submitting a *Transfer of Property Ownership Report*, of any change in ownership or interest in ownership of the Project area. The Permittee and purchaser shall sign and date the notification and provide such notification to the Santa Ana Water Board at least ten (10) days prior to the transfer of ownership. The purchaser shall also submit a written request to the Santa Ana Water Board to be named as the permittee in a revised order.

   ii. Until such time as this Order has been modified to name the purchaser as the permittee, the Permittee shall continue to be responsible for all requirements set forth in this Order.

f. **Transfer of Long-Term Best Management Practices (BMPs) Maintenance.** If maintenance responsibility for post-construction BMPs is legally transferred, the Permittee shall submit to the Santa Ana Water Board a copy of such documentation and shall provide the transferee with a copy of a long-term BMP maintenance plan that complies with manufacturer or designer specifications. The Permittee shall provide such notification to the Santa Ana Water Board with a *Transfer of Long-Term BMP Maintenance Report* at least ten (10) days prior to the transfer of BMP maintenance responsibility.

C. Water Quality Monitoring

1. **General:** If surface water is present, continuous visual surface water monitoring shall be conducted to detect accidental discharge of construction related pollutants (e.g., oil, grease, turbidity plume, or uncured concrete).

2. **Accidental Discharges/Noncompliance:** Upon occurrence of an accidental discharge of hazardous materials or a violation of compliance with a water quality standard, Santa Ana Water Board staff may require water quality monitoring based on the discharge constituents and/or related water quality objectives and beneficial uses.

3. **In-Water Work or Diversions:** During planned work in water any discharge(s) to waters of the State shall conform to the following water quality standards.

   a. **Oil and Grease.** Waste discharges shall not result in deposition of oil, grease, wax, or other material in concentrations that result in a visible film or in coating objects in the water, or that cause a nuisance or adversely affect beneficial uses.

b. Oxygen. The dissolved oxygen content of surface waters shall not be depressed below 5 mg/L for waters designated WARM, as a result of controllable water quality factors. In addition, waste discharge shall not cause the median dissolved oxygen concertation to fall below 85 percent of saturation or the 95th percentile concentration or fall below 75 percent of saturation within a 30-day period.

c. pH. The pH of inland surface waters shall not be depressed below 6.5 or raised above 8.5 as a result of waste discharge.

d. Turbidity. Increases in turbidity that result from controllable water quality factors shall comply with the following: where natural turbidity is between 0 and 50 Nephelometric Turbidity Units (NTU), increases shall not exceed 20 percent; where natural turbidity is between 50 and 100 NTU, increases shall not exceed 10 NTU; and where natural turbidity is greater than 100 NTU, increases shall not exceed 10 percent. Changes in turbidity shall not adversely affect beneficial uses. Measurements of turbidity shall be taken 100 feet downstream of Project activities.

e. Temperature. The temperature of waters designated WARM shall not be raised above 90 °F June through October or above 78 °F during the rest of the year as a result of controllable water quality factors

Sampling shall be conducted in accordance with Table 4 sampling parameters.[5]

Table 4: Sample Type and Frequency Requirements

Parameter	Unit of Measurement	Type of Sample	Minimum Frequency
Oil and Grease	N/A	Visual	Continuous
Dissolved Oxygen	mg/L & % saturation	Grab	Once per day during in-water work
pH	Standard Units	Grab	Once per day during in-water work
Turbidity	NTU	Grab	Once per day during in-water work
Temperature	°F (or as °C)	Grab	Once per day during in-water work

Baseline sampling shall be conducted at least at one location within the Project boundary. All other sampling shall take place at a minimum of two locations: the sample locations shall be upstream and downstream of the construction area. Results of the analyses shall be submitted to the Santa Ana Water Board by the 15th day of each subsequent sampling month. A map or drawing indication the locations of sampling points shall be included with each submittal.

[5] Pollutants shall be analyzed using the analytical methods described in 40 Code of Federal Regulations Part 136; where no methods are specified for a given pollutant, a description of the method to be used must be submitted to the Santa Ana Water Board staff for approval. Grab samples shall be taken between the surface and mid-depth and not be collected at the same time each day to get a complete representation of variations in the receiving water. A hand-held field meter may be used, provided the meter utilizes a U.S. Environmental Protection Agency-approved algorithm/method and is calibrated and maintained in accordance with the manufacturer's instructions. A calibration and maintenance log for each meter used for monitoring shall be maintained onsite.

4. **Post-Construction.** The Permittee shall visually inspect the Project site during the rainy season for three (3) years to ensure excessive erosion, stream instability, or other water quality pollution is not occurring in or downstream of the Project site. If water quality pollution is occurring, contact the Santa Ana Water Board staff member overseeing the Project within three (3) working days. The Santa Ana Water Board may require the submission of a *Violation of Compliance with Water Quality Standards Report*. Additional permits may be required to carry out any necessary site remediation.

D. Standards

1. This Certification will remain valid until the USACE 2017 Nationwide Permits expire on March 18, 2022, or through an extended period beyond the expiration date that is authorized in writing by the USACE.

2. This Order is subject to modification or revocation upon administrative or judicial review, including review and amendment pursuant to Water Code section 13330 and California Code of Regulations, title 23, chapter 28, Article 6 commencing with sections 3867-3869, inclusive. Additionally, the Santa Ana Water Board reserves the right to suspend, cancel, or modify and reissue this Order, after providing notice to the Permittee, if the Santa Ana Water Board determines that the Project fails to comply with any of the conditions of this Order, or when necessary to implement any new or revised water quality standards and implementation plans adopted or approved pursuant to the Porter-Cologne Water Quality Control Act (Water Code, sections 13000 et seq.) or federal Clean Water Act section 303 (Title 33 U.S Code section 1313). For purposes of Clean Water Act section 401(d), the condition constitutes a limitation necessary to assure compliance with water quality standards and appropriate requirements of State law.

3. This Order is not intended and shall not be construed to apply to any activity involving a hydroelectric facility requiring a Federal Energy Regulatory Commission (FERC) license or an amendment to a FERC license, unless the pertinent certification application was filed pursuant to subsection 3855(b) of chapter 28, title 23 of the California Code of Regulations, and that application specifically identified that a FERC license or amendment to a FERC license for a hydroelectric facility was being sought.

4. This Order is conditioned upon total payment of any fee required under title 23 of the California Code of Regulations and owed by the Permittee.

5. In the event of any violation or threatened violation of the conditions of this Order, the violation or threatened violation shall be subject to any remedies, penalties, processes, or sanctions as provided for under State and federal law. For purposes of Clean Water Act, section 401(d), the applicability of any State law authorizing remedies, penalties, processes, or sanctions for the violation or threatened violation constitutes a limitation necessary to assure compliance with the water quality standards and other pertinent requirements incorporated into this Order.

E. General Compliance

1. Failure to comply with any condition of this Order shall constitute a violation of the Porter-Cologne Water Quality Control Act and the Clean Water Act. The Permittee and/or discharger may then be subject to administrative and/or civil liability pursuant to Water Code section 13385.

2. If the conditions of this Order are changed, any of the criteria or conditions as previously described are not met, or new information becomes available that indicates a water quality problem, the Santa Ana Water Board may require that the Permittee submit a *Report of Waste Discharge* and obtain *Waste Discharge Requirements*.

3. Permitted actions shall not cause a violation of any applicable water quality standards, including impairment of designated beneficial uses for receiving waters, as adopted in the Basin Plan and subsequent Basin Plan Amendments or in any applicable State Water Resources Control Board water quality control plan or policy. The source of any such discharge shall be eliminated as soon as practicable.

4. In response to a suspected violation of any condition of this Order, the Santa Ana Water Board may require the holder of this Order to furnish, under penalty of perjury, any technical or monitoring reports the Santa Ana Water Board deems appropriate, provided that the burden, including costs, of the reports bears a reasonable relationship to the need for the reports and the benefits to be obtained from the reports. The additional monitoring requirements ensure that permitted discharges and activities comport with any applicable effluent limitations, water quality standards, and/or other appropriate requirement of State law.

5. The Permittee shall, at all times, fully comply with engineering plans, specifications, and technical reports submitted to support this Order and all subsequent submittals required as part of this Order. The conditions within this Order and Attachments supersede conflicting provisions within Permittee submittals.

6. This Order and all of its conditions contained herein continue to have full force and effect regardless of the expiration or revocation of any federal license or permit issued for the Project. For purposes of Clean Water Act, section 401(d), this condition constitutes a limitation necessary to assure compliance with the water quality standards and other pertinent requirements of State law.

F. Administrative

1. Signatory requirements for all document submittals required by this Order are presented in Attachment C of this Order.

2. This Order does not authorize any act that results in the taking of a threatened, endangered, or candidate species, or any act that is now prohibited or becomes prohibited in the future under either the California Endangered Species Act (Fish and Game Code, sections 2050-2097) or the federal Endangered Species Act (Title 16 U.S. Code sections 1531-1544). If a “take” will result from any act authorized under this Order held by the Permittee, the Permittee shall obtain authorization for the take prior to any construction or operation of the portion of the Project that may result in a take. The Permittee is responsible for meeting all requirements of the applicable endangered species act for the Project authorized under this Order.

3. The Permittee shall grant Santa Ana Water Board staff or an authorized representative (including an authorized contractor acting as a Water Board representative), upon presentation of credentials and other documents as may be required by law, permission to:

a. Enter upon the Project or compensatory mitigation site(s) premises where a regulated facility or activity is located or conducted, or where records are kept;

b. Have access to and copy any records that are kept and are relevant to the Project or the requirements of this Order;

c. Inspect any facilities, equipment (including monitoring and control equipment), practices, or operations regulated or required under this Order;

d. Sample or monitor for the purposes of assuring Order compliance.

4. A copy of this Order shall be provided to any consultants, contractors, and subcontractors working on the Project. Copies of this Order shall remain at the Project site for the duration of this Order. The Permittee shall be responsible for work conducted by its consultants, contractors, and any subcontractors.

5. A copy of this Order shall be available at the Project site(s) during construction for review by site personnel and agencies. All personnel performing work on the Project shall be familiar with the content of this Order and its posted location at the Project site.

6. **Lake and Streambed Alteration Agreement:** The Permittee shall submit a signed copy of the California Department of Fish and Wildlife's lake and streambed alteration agreement to the Santa Ana Water Board immediately upon execution and prior to any discharge to waters of the State.

G. Construction

1. **Dewatering:** Construction dewatering discharges, including temporary stream diversions necessary to carry out the Project, are subject to regulation by Santa Ana Water Board Order No. R8-2020-0006, General Waste Discharge Requirements for Discharges to Surface Waters that Pose an Insignificant (De Minimis) Threat to Water Quality.

2. **Construction General Permit Requirement:** The Permittee shall maintain compliance with conditions described in, and required by, NPDES General Permit for Storm Water Discharges Associated with Construction and Land Disturbance Activities (Order No. 2009-0009-DWQ; NPDES No. CAS000002) and any subsequent approvals.

3. **Good Site Management "Housekeeping":**

a. A Storm Water Pollution Prevention Plan (SWPPP) shall be developed by the construction contractor prior to Project implementation. The SWPPP shall include measures to prevent sediment from entering the watercourse during construction.

b. BMPs for effective perimeter control shall be in place at all times to control the discharge of pollutants from the Project site during construction. Construction waste shall be contained and protected against wind and exposure to storm water at all times, unless being actively handled. Chemical, fuel, and lubricant containers shall be kept closed and protected from damage or upset at all times, unless being actively used. Dirt and landscaping material stockpiles shall have effective erosion control BMPs in place to prevent their transport in storm water or directly into the channel and shall not be located in any waters of the United States. Discharges of wastewater from the Project site are prohibited.

c. Substances resulting from Project-related activities and that could be harmful to aquatic life shall not be discharged to soils or waters of the State. These substances include but are not limited to petroleum lubricants and fuels, cured and uncured cements, epoxies, paints and other protective coating materials, Portland cement concrete or asphalt concrete, and washings and cuttings thereof. All waste concrete shall be removed from the Project site.

d. Motorized equipment shall not be maintained or parked in or near any stream crossing, channel, or lake margin in such manner that petroleum products or other pollutants from the equipment might enter these areas under any flow conditions. Vehicles shall not be driven, or equipment shall not be operated on-site in waters of the State onsite, except as necessary to complete the proposed Project.

e. Prior to construction activities, the Permittee shall delineate the work area with brightly colored fencing or other methods to ensure temporary impacts to waters of the United States and waters of the State do not exceed the limits authorized in this Certification.

4. **Hazardous Materials:** During construction activities, the Permittee shall comply with local, State, and federal laws and regulations regarding the handling and storage of hazardous substances.
5. **Invasive Species and Soil Borne Pathogens:** BMPs to stabilize disturbed soils shall include the use of native plant species whenever feasible.
6. **Storm Water:** The Project shall comply with the local regulations associated with the Santa Ana Water Board's Municipal Stormwater Permit issued to Riverside County and co-permittees under NPDES No. CAS618033 and Waste Discharge Requirements Order No. R8-2010-0033, and subsequent iterations thereof.

H. Compensatory Mitigation for Permanent Impacts[6]

1. Purchase of Mitigation Credits by Permittee for Compensatory Mitigation

a. A copy of the fully executed agreement for the purchase of mitigation credits shall be provided to the Santa Ana Water Board within ten (10) days of authorized impacts.

b. The Permittee shall retain responsibility for providing the compensatory mitigation and long-term management until Santa Ana Water Board staff has received documentation of the credit purchase and the transfer agreement between the Permittee and the seller of credits.

2. Total Required Compensatory Mitigation

a. The Permittee shall provide compensatory mitigation for the authorized impact to an unnamed tributary to San Jacinto River and Perris Valley Channel by purchase of 2.38 acres (a 2:1 mitigation to impact ratio) of rehabilitation credits from a Santa Ana Water Board-approved mitigation bank.

[6] Compensatory Mitigation is for permanent physical loss and permanent ecological degradation of a water of the State.

b. The Permittee shall provide the total required Project compensatory mitigation information for permanent physical loss of area as summarized in Table 5.

Table 5: Required Project Compensatory Mitigation Quantity for Permanent Physical Loss of Area

Aquatic Resource Type	Comp Mit. Type[7]	Units	Method[8]					
			Est.	Re-est.	Reh.	Enh.	Pres.	Unknown
Riparian Zone	MB	Acres	-	-	1.92	-	-	-
Stream Channel	MB	Acres	-	-	0.46	-	-	-

XIII. Certification Deviation

A. Minor modifications of Project locations or predicted impacts may be necessary as a result of unforeseen field conditions, necessary engineering re-design, construction concerns, or similar reasons. Some of these prospective Project modifications may have impacts on water resources. For purposes of this Certification, a *Certification Deviation* is a Project locational or impact modification that does not require an immediate amendment of the Order because the Santa Ana Water Board has determined that any potential water resource impacts that may result from the change are sufficiently addressed by the Order conditions and the CEQA Findings. After the termination of construction, this Order will be formally amended to reflect all authorized Certification Deviations and any resulting adjustments to the amount of water resource impacts and required compensatory mitigation amounts.

B. A Project modification shall not be granted a *Certification Deviation*, if it warrants or necessitates changes that are not addressed by the Order conditions or the CEQA environmental document such that the Project impacts are not addressed in the Project's environmental document or the conditions of this Order. In this case, a supplemental environmental review and different Order will be required.

XIV. Water Quality Certification

I hereby issue the Order (SARWQCB WDID # 332019-30) for the *State Route 60/Moreno Beach Drive Interchange Project, Phase 2*. This Order certifies that any discharge from the referenced Project will comply with the applicable provisions of Clean Water Act sections 301 (Effluent Limitations), 302 (Water Quality Related Effluent Limitations), 303 (Water Quality Standards and Implementation Plans), 306 (National Standards of Performance), and 307 (Toxic and Pretreatment Effluent Standards), as long as all of the conditions listed in the Order are met.

[7] Compensatory mitigation type may be: In-Lieu-Fee (ILF); Mitigation Bank (MB); Permittee-Responsible (PR)

[8] Methods: establishment (Est.), reestablishment (Re-est.), rehabilitation (Reh.), enhancement (Enh.), preservation (Pres.). Unknown applies to advance credits with an unknown method and or location.

This discharge is also regulated pursuant to State Water Resources Control Board Water Quality Order No. 2003-0017-DWQ, which authorizes this Order to serve as Waste Discharge Requirements pursuant to the Porter-Cologne Water Quality Control Act (Water Code, sections 13000 et seq.).

Except insofar as may be modified by any preceding conditions, all Order actions are contingent on: (a) the discharge being limited, and all proposed mitigation being completed in strict compliance with the conditions of this Order and the attachments to this Order; and (b) compliance with all applicable requirements of Statewide Water Quality Control Plans and Policies and the Santa Ana Water Board's Basin Plan and Policies.

Hope Smythe Digitally signed by Hope Smythe
Water Boards Date: 2021.01.07 15:40:12 -08'00'

Hope A. Smythe
Executive Officer
Santa Ana Regional Water Quality Control Board

Date

Attachment A Project Map(s)
Attachment B Report and Notification Requirements
Attachment C Signatory Requirements

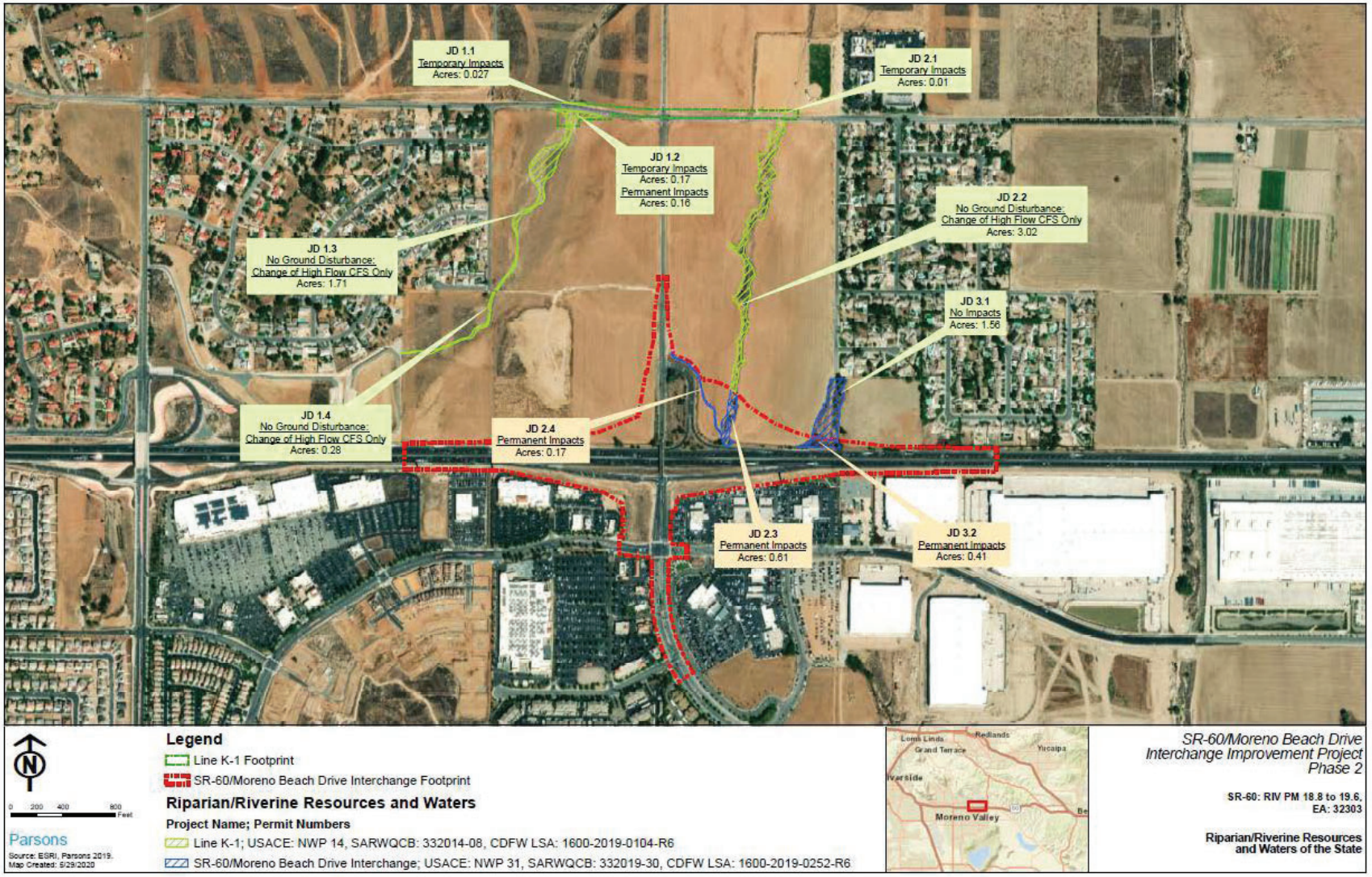
JD 1.1
Temporary Impacts
Acres: 0.027
JD 2.1
Temporary Impacts
Acres: 0.01
JD 1.2
Temporary Impacts
Acres: 0.17
Permanent Impacts
Acres: 0.16
JD 2.2
No Ground Disturbance:
Change of High Flow CFS Only
Acres: 3.02
JD 1.3
No Ground Disturbance:
Change of High Flow CFS Only
Acres: 1.71
JD 3.1
No Impacts
Acres: 1.56
JD 1.4
No Ground Disturbance:
Change of High Flow CFS Only
Acres: 0.28
JD 2.4
Permanent Impacts
Acres: 0.17
JD 2.3
Permanent Impacts
Acres: 0.61
JD 3.2
Permanent Impacts
Acres: 0.41
Legend
Line K-1 Footprint
SR-60/Moreno Beach Drive Interchange Footprint
Riparian/Riverine Resources and Waters
Project Name; Permit Numbers
Line K-1; USACE: NWP 14, SARWQCB: 332014-08, CDFW LSA: 1600-2019-0104-R6
SR-60/Moreno Beach Drive Interchange; USACE: NWP 31, SARWQCB: 332019-30, CDFW LSA: 1600-2019-0252-R6
0 200 400 800 Feet
Parsons
Source: ESRI, Parsons 2019.
Map Created: 5/29/2020
Loma Linda
Redlands
Grand Terrace
Yucaipa
Riverside
Moreno Valley
SR-60/Moreno Beach Drive
Interchange Improvement Project
Phase 2
SR-60: RIV PM 18.8 to 19.6,
EA: 32303
Riparian/Riverine Resources
and Waters of the State

Copies of this Form

In order to identify your Project, it is necessary to include a copy of the Project-specific Cover Sheet below with your report (see page 3). Please retain for your records.

Report Submittal Instructions

1. Check the box on the *Report and Notification Cover Sheet* next to the report or notification you are submitting.

    - **Part A (Annual Report):** Submitted annually from the anniversary of the Project effective date until a *Notice of Project Complete Letter* is issued.

    - **Part B (Project Status Notifications):** Used to notify the Santa Ana Water Board of the status of the Project schedule that may affect Project billing.

    - **Part C (Conditional Notifications and Reports):** Required on a case-by-case basis for accidental discharges of hazardous materials, violation of compliance with water quality standards, notification of in-water work, or other reports.

2. Sign the *Report and Notification Cover Sheet* and attach all information requested for the Report Type.

3. **Electronic Report Submittal Instructions:**
    - Submit signed *Report and Notification Cover Sheet* and required information via email to: RB8-401Reporting@waterboards.ca.gov
    - Include in the subject line of the email:
      Subject: ATTN: Maher Zaher; Reg. Measure ID: 435308 Report; WDID # 332019-30

Definition of Reporting Terms

1. **Active Discharge Period:** The active discharge period begins with the effective date of this Order and ends on the date that the Permittee receives a *Notice of Completion of Discharges Letter* or, if no post-construction monitoring is required, a *Notice of Project Complete Letter*. The Active Discharge Period includes all elements of the Project, including site construction and restoration, and any Permittee responsible compensatory mitigation construction.

2. **Request for Notice of Completion of Discharges Letter:** This request by the Permittee to the Santa Ana Water Board staff pertains to projects that have post construction monitoring requirements (e.g., if site restoration were required to be monitored for five (5) years following construction). Santa Ana Water Board staff will review the request and send a *Completion of Discharges Letter* to the Permittee upon approval. This letter will initiate the post-discharge monitoring period and a change in fees from the annual active discharge fee to the annual post-discharge monitoring fee.

3. **Request for Notice of Project Complete Letter:** This request by the Permittee to the Santa Ana Water Board staff pertains to projects that either have completed post-construction monitoring and achieved performance standards, or have no post-construction monitoring requirements and no further Project activities are planned. Santa Ana Water Board staff will review the request and send *a Project Complete Letter* to the Permittee upon approval. Termination of annual invoicing of fees will correspond with the date of this letter.

4. **Post-Discharge Monitoring Period:** The post-discharge monitoring period begins on the date of the *Notice of Completion of Discharges Letter* and ends on the date of the *Notice of Project Complete Letter* issued by the Santa Ana Water Board staff. The Post-Discharge Monitoring Period includes continued water quality monitoring or compensatory mitigation monitoring.

5. **Effective Date:** 1/07/2021

Map/Photo Documentation Information

When submitting maps or photos, please use the following formats.

1. **Map Format Information:**
   Preferred map formats of at least 1:24000 (1" = 2000') detail (listed in order of preference):
   - **GIS shapefiles**: The shapefiles shall depict the boundaries of all Project areas and extent of aquatic resources impacted. Each shape should be attributed with the extent/type of aquatic resources impacted. Features and boundaries should be accurate to within 33 feet (10 meters). Identify datum/projection used and, if possible, provide map with a North American Datum of 1983 (NAD83) in the California Teale Albers projection in feet.
   - **Google KML files** saved from Google Maps: My Maps or Google Earth Pro. Maps shall show the boundaries of all Project areas and extent/type of aquatic resources impacted. Include URL(s) of maps. If this format is used, include a spreadsheet with the object ID and attributed with the extent/type of aquatic resources impacted.
   - **Other electronic format** (CAD or illustration format) that provides a context for location (inclusion of landmarks, known structures, geographic coordinates, or USGS DRG or DOQQ). Maps shall show the boundaries of all Project areas and extent/type of aquatic resources impacted. If this format is used, include a spreadsheet with the object ID and attributed with the extent/type of aquatic resources impacted.
   - Aquatic resource maps marked on paper **USGS 7.5-minute topographic maps** or **Digital Orthophoto Quarter Quads (DOQQ)** printouts. Maps shall show the boundaries of all Project areas and extent/type of aquatic resources impacted. If this format is used, include a spreadsheet with the object ID and attributed with the extent/type of aquatic resources impacted.

2. **Photo-Documentation:** Include a unique identifier, date stamp, written description of photo details, and latitude/longitude (in decimal degrees) or map indicating location of photo. Successive photos should be taken from the same vantage point to compare pre/post construction conditions.

REPORT AND NOTIFICATION COVER SHEET

Project:	State Route 60/Moreno Beach Drive Interchange Project, Phase 2
Permittee:	City of Moreno Valley
SARWQCB WDID:	332019-30
Reg. Meas. ID:	435308 **Place ID:** 862659
Order Effective Date:	January 7, 2021

Report Type Submitted

Part A – Project Reporting	
Report Type 1	☐ **Annual Report**
Part B - Project Status Notifications	
Report Type 2	☐ **Commencement of Construction**
Report Type 3	☐ **Request for Notice of Completion of Discharges Letter**
Report Type 4	☐ **Request for Notice of Project Complete Letter**
Part C - Conditional Notifications and Reports	
Report Type 5	☐ **Accidental Discharge of Hazardous Material Report**
Report Type 6	☐ **Violation of Compliance with Water Quality Standards Report**
Report Type 7	☐ **In-Water Work and Diversions Water Quality Monitoring Report**
Report Type 8	☐ **Modifications to Project Report**
Report Type 9	☐ **Transfer of Property Ownership Report**
Report Type 10	☐ **Transfer of Long-Term Best Management Practices (BMPs) Maintenance Report**

"I certify under penalty of law that I have personally examined and am familiar with the information submitted in this document and all attachments and that, based on my inquiry of those individuals immediately responsible for obtaining the information, I believe that the information is true, accurate, and complete. I am aware that there are significant penalties for submitting false information, including the possibility of fine and imprisonment."

Print Name [1]	**Affiliation and Job Title**
Signature	**Date**

[1]STATEMENT OF AUTHORIZATION (include if authorization has changed since application was submitted)

I hereby authorize _____ to act in my behalf as my representative in the submittal of this report, and to furnish upon request supplemental information in support of this submittal.

_____ _____
Permittee's Signature Date

***This Report and Notification Cover Sheet must be signed by the Permittee or a duly authorized representative and included with all written submittals.**

Part A – Project Reporting

Report Type 1	**Annual Report**
Report Purpose	Notify the Santa Ana Water Board staff of Project status during both the active discharge and post-discharge monitoring periods.
When to Submit	Annual reports shall be submitted each year by the effective date. Annual reports shall continue until a Notice of Project Complete Letter is issued to the Permittee.
Report Contents	The contents of the annual report shall include the topics indicated below for each Project period. Report contents are outlined in Annual Report Topics below. **<u>During the Active Discharge Period</u>** • **Topic 1: Construction Summary** • **Topic 2: Mitigation for Temporary Impacts Status** • **Topic 3: Compensatory Mitigation for Permanent Impacts Status** **<u>During the Post-Discharge Monitoring Period</u>** • **Topic 2: Mitigation for Temporary Impacts Status** • **Topic 3: Compensatory Mitigation for Permanent Impacts Status**
Annual Report Topics (1-3)	
Annual Report Topic 1	**Construction Summary**
When to Submit	With the annual report during the Active Discharge Period.
Report Contents	**1.** Project progress and schedule, including initial ground disturbance, site clearing and grubbing, road construction, site construction, and the implementation status of construction storm water BMPs. If construction has not started, provide estimated start date and reasons for delay. **2.** Map showing general Project progress. **3.** If applicable: **a.** Summary of Conditional Notification and Report Types 6 and 7 (Part C below). **b.** Summary of Certification Deviations.
Annual Report Topic 2	**Mitigation for Temporary Impacts Status**
When to Submit	With the annual report during both the Active Discharge Period and Post-Discharge Monitoring Period.
Report Contents	**1.** Planned date of initiation and map showing locations of mitigation for temporary impacts to waters of the State and all upland areas of temporary disturbance which could result in a discharge to waters of the State.

	2. If mitigation for temporary impacts has already commenced, provide a map and information concerning attainment of performance standards contained in the restoration plan.
Annual Report Topic 3	**Compensatory Mitigation for Permanent Impacts Status**
When to Submit	With the annual report during both the Active Discharge Period and Post-Discharge Monitoring Period.
Report Contents	***If not applicable, report N/A.** **Part A. Permittee Responsible** **1.** Planned date of initiation of compensatory mitigation site installation**.** **2.** If installation is in progress, a map of what has been completed to date. **3.** If the compensatory mitigation site has been installed, provide a final map and information concerning attainment of performance standards contained in the compensatory mitigation plan. **Part B. Mitigation Bank or In-Lieu Fee (ILF)** **1.** Status or proof of purchase of credit types and quantities. **2.** Include the name of bank/ILF Program and contact information. **3.** If ILF, location of project and type if known.

Part B – Project Status Notifications

Report Type 2	Commencement of Construction
Report Purpose	Notify Santa Ana Water Board staff prior to the start of construction.
When to Submit	Must be received at least seven (7) days prior to start of initial ground disturbance activities.
Report Contents	**1.** Date of commencement of construction. **2.** Anticipated date when discharges to waters of the State will occur. **3.** Project schedule milestones, including a schedule for onsite compensatory mitigation, if applicable.

Report Type 3	Request for Notice of Completion of Discharges Letter
Report Purpose	Notify Santa Ana Water Board staff that post-construction monitoring is required and that active Project construction, including any mitigation and permittee responsible compensatory mitigation, is complete.
When to Submit	Must be received by Santa Ana Water Board staff within thirty (30) days following completion of all Project construction activities.
Report Contents	**1.** Status of storm water Notice of Termination(s), if applicable. **2.** Status of post-construction storm water BMP installation. **3.** Pre- and post-photo documentation of all Project activity sites where the discharge of dredge and/or fill/excavation was authorized. **4.** Summary of Certification Deviation discharge quantities compared to initial authorized impacts to waters of the State, if applicable. **5.** An updated monitoring schedule for mitigation for temporary impacts to waters of the State and Permittee responsible compensatory mitigation during the post-discharge monitoring period, if applicable.

Report Type 4	Request for Notice of Project Complete Letter
Report Purpose	Notify Santa Ana Water Board staff that construction and/or any post-construction monitoring is complete, or is not required, and no further Project activity is planned.
When to Submit	Must be received by Santa Ana Water Board staff within thirty (30) days following completion of all Project activities.
Report Contents	**Part A: Mitigation for Temporary Impacts** **1.** A report establishing that the performance standards outlined in the restoration plan have been met for Project site upland areas of temporary disturbance that could result in a discharge to waters of the State. **2.** A report establishing that the performance standards outlined in the restoration plan have been met for restored areas of temporary impacts to waters of the State. Pre- and post-photo documentation of all restoration sites.

	Part B: Permittee Responsible Compensatory Mitigation **1.** A report establishing that the performance standards outlined in the compensatory mitigation plan have been met. **2.** Status on the implementation of the long-term maintenance and management plan and funding of endowment. **3.** Pre- and post-photo documentation of all compensatory mitigation sites. **4.** Final maps of all compensatory mitigation areas (including buffers). **Part C: Post-Construction Storm Water BMPs** **1.** Date of storm water Notice of Termination(s), if applicable. **2.** Report status and functionality of all post-construction BMPs.

Part C – Conditional Notifications and Reports

Report Type 5	Accidental Discharge of Hazardous Material Report
Report Purpose	Notifies Santa Ana Water Board staff that an accidental discharge of hazardous material has occurred.
When to Submit	Within five (5) working days following the date of an accidental discharge. Continue reporting as required by Santa Ana Water Board staff.
Report Contents	**1.** The report shall include the *OES Incident/Assessment Form*, a full description and map of the accidental discharge incident (i.e., location, time and date, source, discharge constituent and quantity, aerial extent, and photo documentation). If applicable, the OES Written *Follow-Up Report* may be substituted. **2.** If applicable, any required sampling data, a full description of the sampling methods, including frequency/dates and times of sampling, equipment, locations of sampling sites. **3.** Locations and construction specifications of any barriers, including silt curtains or diverting structures and any associated trenching or anchoring.

Report Type 6	Violation of Compliance with Water Quality Standards Report
Report Purpose	Notifies Santa Ana Water Board staff that a violation of compliance with water quality standards has occurred.
When to Submit	The Permittee shall report any event that causes a violation of water quality standards within three (3) working days of the noncompliance event notification to Santa Ana Water Board staff.
Report Contents	The report shall include: the cause; the location shown on a map; and the period of the noncompliance, including exact dates and times. If the noncompliance has not been corrected, include: the anticipated time it is expected to continue; the steps taken or planned to reduce, eliminate, and prevent reoccurrence of the noncompliance; and any monitoring results, if required by Santa Ana Water Board staff.

Report Type 7	In-Water Work and Diversions Water Quality Monitoring Report
Report Purpose	Notifies Santa Ana Water Board staff of the completion of in-water work.
When to Submit	Within three (3) working days following the completion of in-water work. Continue reporting in accordance with the approved water quality monitoring plan.
Report Contents	As required by the approved water quality monitoring plan.

Report Type 8	**Modifications to Project Report**
Report Purpose	Notifies Santa Ana Water Board staff if the Project, as described in the application materials, is altered in any way or by the imposition of subsequent permit conditions by any local, State, or federal regulatory authority.
When to Submit	If Project implementation as described in the application materials is altered in any way or by the imposition of subsequent permit conditions by any local, State, or federal regulatory authority.
Report Contents	A description and location of any alterations to Project implementation. Identification of any Project modifications that will interfere with the Permittee's compliance with the Order.

Report Type 9	**Transfer of Property Ownership Report**
Report Purpose	Notifies Santa Ana Water Board staff of change in ownership of the Project or Permittee-responsible mitigation area.
When to Submit	At least ten (10) working days prior to the transfer of ownership.
Report Contents	**1.** A statement that the Permittee has provided the purchaser with a copy of this Order and that the purchaser understands and accepts: **a.** the Order's requirements and the obligation to implement them or be subject to administrative and/or civil liability for failure to do so; and **b.** responsibility for compliance with any long-term BMP[1] maintenance plan requirements in this Order. **2.** A statement that the Permittee has informed the purchaser to submit a written request to the Santa Ana Water Board to be named as the permittee in a revised order.

Report Type 10	**Transfer of Long-Term BMP Maintenance Report**
Report Purpose	Notifies Santa Ana Water Board staff of transfer of long-term BMP maintenance responsibility.
When to Submit	At least ten (10) working days prior to the transfer of BMPs maintenance responsibility.
Report Contents	A copy of the legal document transferring maintenance responsibility of post-construction BMPs.

[1] Best Management Practices (BMPs) is a term used to describe a type of environmental or water pollution control.

SIGNATORY REQUIREMENTS

All Documents Submitted In Compliance With This Order
Shall Meet The Following Signatory Requirements:

1. All applications, reports, or information submitted to the Santa Ana Regional Water Quality Control Board (Santa Ana Water Board) shall be signed and certified as follows:

   a) For a corporation, by a responsible corporate officer of at least the level of vice-president.
   b) For a partnership or sole proprietorship, by a general partner or proprietor, respectively.
   c) For a municipality, or a State, federal, or other public agency, by either a principal executive officer or ranking elected official.

2. A duly authorized representative of a person designated in items 1.a through 1.c above may sign documents if:

   a) The authorization is made in writing by a person described in items 1.a through 1.c above.
   b) The authorization specifies either an individual or position having responsibility for the overall operation of the regulated activity.
   c) The written authorization is submitted to the Santa Ana Water Board staff contact prior to submitting any documents listed in item 1 above.

3. Any person signing a document under this section shall make the following certification:

   “I certify under penalty of law that I have personally examined and am familiar with the information submitted in this document and all attachments and that, based on my inquiry of those individuals immediately responsible for obtaining the information, I believe that the information is true, accurate, and complete. I am aware that there are significant penalties for submitting false information, including the possibility of fine and imprisonment.”

APPENDIX R

CERTIFIED PAYROLL FORMS

California
Department of
Industrial Relations

PUBLIC WORKS PAYROLL REPORTING FORM

Page _____ of _____

NAME OF CONTRACTOR:
OR SUBCONTRACTOR:

CONTRACTOR'S LICENSE NO.:
SPECIALITY LICENSE NO.:

ADDRESS:

PAYROLL NO.:

FOR WEEK ENDING:

SELF-INSURED CERTIFICATE NO.:

WORKERS' COMPENSATION POLICY NO.:

PROJECT OR CONTRACT NO.:

PROJECT AND LOCATION:

(1) NAME, ADDRESS AND SOCIAL SECURITY NUMBER OF EMPLOYEE	(2) NO. OF WITH-HOLDING EXEMPTIONS	(3) WORK CLASSIFICATION	(4) DAY	M	T	W	TH	F	S	S	(5) TOTAL HOURS	(6) HOURLY RATE OF PAY	(7) GROSS AMOUNT EARNED		(8) DEDUCTIONS, CONTRIBUTIONS AND PAYMENTS							(9) NET WGS PAID FOR WEEK	(9) CHECK NO.
				DATE																			
				HOURS WORKED EACH DAY																			
			S										THIS PROJECT	ALL PROJECTS	FED. TAX	FICA (SOC. SEC.)	STATE TAX	SDI	VAC/ HOLIDAY	HEALTH & WELF.	PENSION		
			O												TRAING.	FUND ADMIN	DUES	TRAV/ SUBS.	SAVINGS	OTHER*	TOTAL DEDUC-TIONS		
			S										THIS PROJECT	ALL PROJECTS	FED. TAX	FICA (SOC. SEC.)	STATE TAX	SDI	VAC/ HOLIDAY	HEALTH & WELF.	PENSION		
			O												TRAING.	FUND ADMIN	DUES	TRAV/ SUBS.	SAVINGS	OTHER*	TOTAL DEDUC-TIONS		
			S										THIS PROJECT	ALL PROJECTS	FED. TAX	FICA (SOC. SEC.)	STATE TAX	SDI	VAC/ HOLIDAY	HEALTH & WELF.	PENSION		
			O												TRAING.	FUND ADMIN	DUES	TRAV/ SUBS.	SAVINGS	OTHER*	TOTAL DEDUC-TIONS		
			S										THIS PROJECT	ALL PROJECTS	FED. TAX	FICA (SOC. SEC.)	STATE TAX	SDI	VAC/ HOLIDAY	HEALTH & WELF.	PENSION		
			O												TRAING.	FUND ADMIN	DUES	TRAV/ SUBS.	SAVINGS	OTHER*	TOTAL DEDUC-TIONS		
			S										THIS PROJECT	ALL PROJECTS	FED. TAX	FICA (SOC. SEC.)	STATE TAX	SDI	VAC/ HOLIDAY	HEALTH & WELF.	PENSION		
			O												TRAING.	FUND ADMIN	DUES	TRAV/ SUBS.	SAVINGS	OTHER*	TOTAL DEDUC-TIONS		

S = STRAIGHT TIME
O = OVERTIME
SDI = STATE DISABILITY INSURANCE

*OTHER – Any other deductions, contributions and/or payments whether or not included or required by prevailing wage determinations must be separately listed. Use extra sheet(s) if necessary

CERTIFICATION **MUST** be completed
(See reverse side)

Form A-1-131 (New 2-80)

NOTICE TO PUBLIC ENTITY

For Privacy Considerations

Fold back along dotted line prior to copying for release to general public (private persons).

(Paper Size then 8-1/2 x 11 inches)

- -

I, _____, the undersigned, am the
(Name – print)

_____ with the authority to act for and on behalf of
(Position in business)

_____, certify under penalty of perjury
(Name of business and/or contractor)

that the records or copies thereof submitted and consisting of _____
(Description, number of pages)

are the originals or true, full, and correct copies of the originals which depict the payroll record(s) of the actual disbursements by way of cash, check, or whatever form to the individual or individuals named.

Date: _____ Signature: _____

A public entity may require a stricter and/or more extensive form of certification.

APPENDIX S

CHANGE ORDER FORMS

CITY OF MORENO VALLEY
PUBLIC WORKS DEPARTMENT
Capital Projects Division

CONTRACT CHANGE ORDER NO. X

PROJECT NO.:

DESCRIPTION:

TO: **Construction Company, Inc.**

You are hereby requested to comply with the following changes from the Contract Plans and Specifications:

SUMMARY OF CHANGES		
Description (Detailed Explanation Attached)		Change in Contract Price[1]
1.	Additional work items	$0.00
2.	Adjustment in Final Bid Quantities	$0.00
	Net Change in Contract Price	**$0.00**

[1] Deduction or decrease in Contract Price is denoted in parentheses

The following change is hereby made a part of the Contract Documents and shall be performed under the same terms and conditions as required by the original Contract Documents. Except as modified herein, the original Contract Documents and all prior amendments shall remain in full force and effect and all of the terms of the Contract Documents are hereby incorporated in this Change Order.

SUMMARY OF ALL CHANGE ORDERS

ORIGINAL CONTRACT AMOUNT $000,000.00
CCO1 (FINAL) $0.00
TOTAL $000,000.00

SUMMARY OF WORKING DAYS

FIRST DAY OF WORK: ..... Date
CONTRACT WORKING DAYS: X
TIME EXTENSION:
CCO 1 (Final) ..... Y
NEW TOTAL WORKING DAYS: .....X+Y
LAST DAY OF WORK: .....New Date

CHANGE ORDER DETAIL

Change Order No.: **X**

Project No.:

Description:

The changes or interpretations described and noted herein are hereby authorized. The signed original of this order is on file in the Department of Public Works. Shown as separate paragraphs: (A) Reason for Change; (B) Description of Change; (C) Change in Contract Costs; and (D) Change in Completion Date.

Item No. 1:

A. Reason for Change:

Provide reasons for change.

B. Description of Change:

ITEM	DESCRIPTION	UNIT	UNIT PRICE	BID OR CURRENT APPROVED QTY	FINAL QTY	CHANGE	CHANGE IN COST[1]
New Item				0	0	0	0.00

C. Change in Contract Cost:
Add $0.00

D. Change in Completion Date:
Add Y Working Days

Item No. 2: Adjustment in Final Bid Quantities:

A. Reason for Change:
Due to conditions encountered during construction, modifications to the amount of Work were determined to be appropriate, and the changes were addressed by means of adjusting applicable contract quantities, as outlined below.

B. Description of Change:

ITEM	DESCRIPTION	UNIT	UNIT PRICE	BID OR CURRENT APPROVED QTY	FINAL QTY	CHANGE	CHANGE IN COST[1]

[1] Deduction or decrease in Contract Price is denoted in parentheses

C. Change in Contract Cost:
Add $0.00

D. Change in Completion Date:
No Change.

The original Contract Price was and 00/100 Dollars ($0.00). Contract Change Order No. X increased the Contract Price by 00/100 Dollars ($0.00). The new Contract Price will be 00/100, resulting in an increase of approximately 0.00% to the original Contract.

The original Contract Time of X (x) Working Days was extended by Y (y) Working Days per Change Order No. 1 (Final). The last contract Working Day is new Date.

Ordered: _____ Date: _____
Public Works Director/City Engineer

Concurred by: _____ Date: _____
Capital Projects Division Manager

Concurred by: _____ Date: _____
Project Manager

Acceptance by Contractor:

This Change Order is in full compromise and settlement of all adjustments to Contract Time and Contract Price, and compensation for any and all delay, extended or additional field and home office overhead, disruption, acceleration, inefficiencies, lost labor or equipment productivity, differing site conditions, construction interferences and other extraordinary or consequential damages (hereinafter called "Impacts"), including any ripple or cumulative effect of said Impacts on the overall Work under the Contract arising directly or indirectly from the performance of Work described in this Change Order. By execution of this Change Order, Contractor agrees that this Change Order constitutes a complete accord and satisfaction with respect to all claims for schedule extension, Impacts, or any costs of any nature, character or kind arising out of or incidental to this Change Order.

Name: _____ Date: _____

Title: _____

CHANGE ORDER PROPOSAL FORM

CONTRACT CHANGE ORDER PROPOSAL SUMMARY REPORT

Date_____

CCO Proposal No._____ **Contractor**_____

Item No._____ **Location**_____

AMOUNT

General Contractor

1. Labor Cost: ..... $_____
2. Material Cost: ..... $_____
3. Equipment Cost: ..... $_____
4. Special Forces/Services: ..... $_____

Subtotal Contractor Cost: ..... $_____

5. Subcontractor/Sub-subcontractor Name_____
   a. Labor Cost ..... $_____
   b. Material Cost ..... $_____
   c. Equipment Cost ..... $_____

Subtotal Subcontractor/Sub-subcontractor Cost ..... $_____

6. Subcontractor/Sub-subcontractor Name_____
   a. Labor Cost ..... $_____
   b. Material Cost ..... $_____
   c. Equipment Cost ..... $_____

Subtotal Subcontractor/Sub-subcontractor Cost ..... $_____

TOTAL CONTRACT CHANGE ORDER COSTS ..... $_____

CHANGE ORDER PROPOSAL FORM

LABOR COST REPORT

Date_____

CCO Proposal No._____ **Contractor or Subcontractor**_____

Item No._____ **Location**_____

CLASSIFICATION AND NAME	HOURS	HOURLY RATE	EXTENDED AMOUNTS
Classification:	OT	$	$
Name:	REG	$	$
Classification:	OT	$	$
Name:	REG	$	$
Classification:	OT	$	$
Name:	REG	$	$
Classification:	OT	$	$
Name:	REG	$	$
Classification:	OT	$	$
Name:	REG	$	$
Classification:	OT	$	$
Name:	REG	$	$
TOTAL LABOR			**$**

Overhead/profit 20%.....$_____

Total labor/overhead/profit.....$_____

Subcontractor's mark-up of total sub-subcontractor labor/overhead/profit (if applicable) 5% .....$_____

General contractor's mark-up of total subcontractor or sub-subcontractor labor/overhead/profit (if applicable) 5%.....$_____

Total.....**$**_____

CHANGE ORDER PROPOSAL FORM

LABOR RATES REPORT

Date_____

CCO Proposal No._____ **Contractor or Subcontractor**_____

Item No._____ **Location**_____

CLASSIFICATION:		
TAXABLE BASE:		**AMOUNT**
Base Hourly Pay		$
Vacation		$
TOTAL TAXABLE BASE		**$**
TAXES & INSURANCE	**PERCENT**	**AMOUNT**
Social Security Tax		$
State Unemployment Tax		$
Federal Unemployment Tax		$
Workmen's Compensation		$
Liability & Umbrella Insurance		$
TOTAL TAXES & INSURANCE		**$**
FRINGE BENEFITS	**AMOUNT**	
Pension	$	
Health & Welfare	$	
Training	$	
Other Fringe Benefits	$	
TOTAL FRINGE BENEFITS	**$**	
TOTAL LABOR RATE PER CLASSIFICATION	**$**	

CHANGE ORDER PROPOSAL FORM

MATERIAL COST REPORT

Date_____

CCO Proposal No._____ Contractor or Subcontractor_____

Item No._____ Location_____

INVOICE NO.	DESCRIPTION	AMOUNT
1.	Material	$
	Sales Tax (Prevailing Tax Rate) 7.75%	$
	Subtotal	$
2.	Material	$
	Sales Tax (Prevailing Tax Rate) 7.75%	$
	Subtotal	$
3.	Material	$
	Sales Tax (Prevailing Tax Rate) 7.75%	$
	Subtotal	$
SUBTOTAL MATERIAL COST		$

NOTE: An itemized list of materials, manufacturers, serial numbers, invoices and other pertinent date shall be submitted along with the material cost report.

Overhead/profit 15%.....$_____

Total material/overhead/profit.....$_____

Subcontractor's mark-up of total sub-subcontractor material/overhead/profit (if applicable) 5%.....$_____

General contractor's mark-up of total subcontractor or sub-subcontractor material/overhead/profit (if applicable) 5%.....$_____

Total.....$_____

CHANGE ORDER PROPOSAL FORM

EQUIPMENT COST REPORT

Date_____

CCO Proposal No._____ Contractor or Subcontractor_____

Item No._____ Location_____

EQUIPMENT COST REPORT

EQUIPMENT NO. (Description, Type, Size)	HOURS	HOURLY RATE	EXTENDED AMOUNTS
SUBTOTAL EQUIPMENT COST			**$**

Overhead/profit 15%.....$_____

Total equipment/overhead/profit .....$_____

Subcontractor's mark-up of total sub-subcontractor equipment/overhead/profit (if applicable) 5%.....$_____

General contractor's mark-up of total subcontractor or sub-subcontractor equipment/overhead/profit (if applicable) 5% .....$_____

Total.....**$**_____

CHANGE ORDER PROPOSAL FORM

SPECIAL FORCES/SERVICES COST REPORT

Date_____

CCO Proposal No._____ Contractor or Subcontractor_____

Item No._____ Location_____

INVOICE NO.	DESCRIPTION	AMOUNT
1.		$
		$
	Subtotal	$
2.		$
		$
	Subtotal	$
3.		$
		$
	Subtotal	$
SUBTOTAL MATERIAL COST		$

NOTE: An itemized list of materials, manufacturers, serial numbers, invoices and other pertinent date shall be submitted along with the special forces/services cost report.

Overhead/profit 15%.....$_____

Total Special Forces/Services Overhead/Profit.....$_____

APPENDIX T

DIG ALERT DELINEATION FOR UNDERGROUND SERVICE MARKINGS

DIGALERT

How to Delineate a Prospective Excavation Site

This marking guide provides for uniform marking of the area to be excavated with white paint in paved surfaces, or in unpaved areas with other suitable markings such as stakes or flags.

White Paint Marking

In the case of a single excavation of known dimensions and location, delineate the exact area to be excavated with white paint through the use of dots or dashes, or a continuous solid line. Limit the size of each dash to 6 inches in length and 1 inch in width, with interval spacing not less than 48 inches between each dash. When using a solid line, limit its width to 1 inch. In either case, excavators must insure that their white paint marks cannot be misinterpreted as a traffic or pedestrian control.

In the case of numerous excavations or one long, continuous excavation, mark the center line of the excavation with arrows showing the direction of the excavation. Mark lateral excavation with an arrow

Single Point Excavation

Four Corner Marking

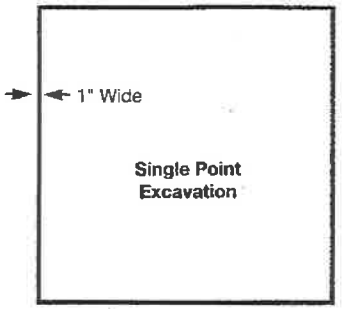

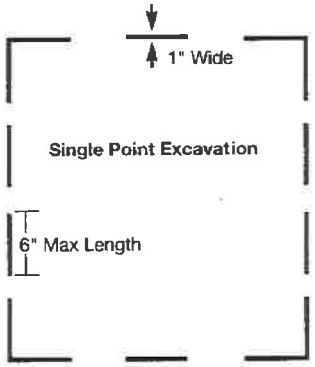

Dash Line Marking

showing direction from the center line with an additional mark at the curb of property line. Limit the size of each arrow to 6 inches in length and 1 inch in width, with interval spacing not less than 48 inches between each arrow. When calling the regional notification center for locating, give the width of the excavation in number of feet either side of the center line of lateral marks.

The marked area of excavation should be identified by the name, initials or logo, in white paint, of the company planning to conduct the excavation.

Delineate the area to be excavated before calling the regional notification center. If this is impractical due to permit requirements or other restrictions, notify the center of the exact date and time the excavation will be delineated. This will assist the operators of subsurface installations in scheduling their field marking.

All excavators are reminded that premarking is a requirement of the California Code of Regulations, Section 4216 and 4217. Failure to premark when practical can jeopardize your permit, or result in civil penalties. If premarking is not practical, the excavator shall contact the regional notification center to advise the operators that the excavator shall identify the area to be excavated in another manner sufficient to enable the operator to determine the exact area of the excavation to be field marked.

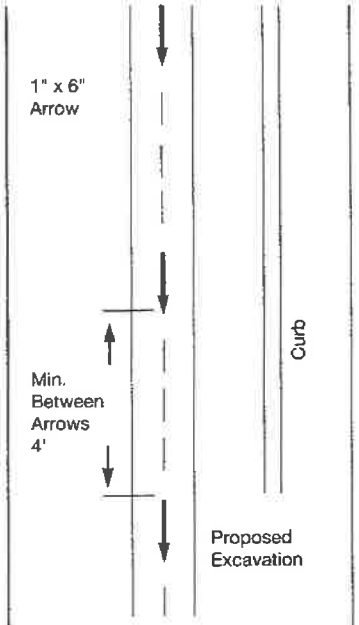

Trench or Continuous Excavation

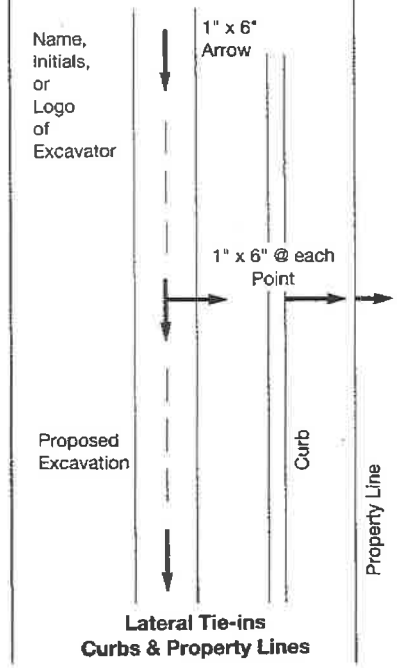

Lateral Tie-ins
Curbs & Property Lines

APPENDIX U

RED IMPORTED FIRE ANT COOPERATIVE AGREEMENT

COOPERATIVE RED IMPORTED FIRE ANT PROJECT

SOIL COMPANY COMPLIANCE AGREEMENT NO-

[Pursuant to California Food and Agricultural Code Section 5701(a) and California Code of Regulations Section 3432]

PARTIES:

1. California Department of Food and Agriculture, the United States Department of Agriculture (Animal and Plant Health Inspection Service), and the Riverside County Agricultural Commissioner, cooperating as the **Cooperative Red Imported Fire Ant Project** (subsequently referred to as "Cooperative RIFA Project").

Project Officer:_____
73-710 Fred Waring Drive Suite 220
Palm Desert, CA 92260
Telephone: (760) 776-8208
Facsimile: (760) 776-8091

2. Name of Company:_____ (subsequently referred to as "Company")

Mailing Address:_____ City:_____ Zip:_____

Physical Location:_____City:_____ Zip:_____

GPS:_____ TB:_____ XST:_____

Phone:_____ Fax:_____ Contact:_____

Comments:_____Acres:_____

BACKGROUND:

Red Imported Fire Ants present a real and present danger to persons and property in the State of California. Movement of soil is a recognized channel for the spread of Red Imported Fire Ants from established locations to new locations. The Cooperative RIFA Project is a cooperative effort between public entities which are responsible for containing the movement of Red Imported Fire Ants. Soil Company is located within an identified Red Imported Fire Ant Quarantine Area.

AGREEMENT:

A. The Cooperative RIFA Project will permit Company to self-execute the RIFA Quarantine requirements attached as Exhibit(s) _____ , inclusive and incorporated into this agreement by reference as if fully set out.

B. In exchange for the Cooperative RIFA Project's promise contained in sub-paragraph "A" above, Company agrees to:

1. Handle, process, and/or move regulated articles in accordance with the RIFA Quarantine requirements;

2. Follow the Cooperative RIFA Project's instructions, whether written or in the form of a verbal communication from the Project Officer, for the use of any and all RIFA permits and certificates;

3. Maintain and make such records as the Cooperative RIFA project requires accessible for inspection upon reasonable notice by the Cooperative RIFA Project's Project Officer. These records shall be maintained for a period of the later of two years or the resolution of any outstanding claims; and,

C. Agreement becomes effective on signing and shall remain in effect until canceled by either party on 30 days notice to the other at the address of either appearing above. However, the Cooperative RIFA Project may accelerate the notice to immediate for cause, including but not limited to discovery of RIFA on property or Company's abandonment of the procedures outlined in the attached Exhibits.

D. Company assumes liability, if any, arising from the manner in which Company applies treatments.

NOTICE: Any signatory or employee of any signatory who violates the terms of this Compliance Agreement may be subject to Civil Penalties pursuant to California Food and Agricultural Code Section 5705.

Signed in the County of_____, in the State of California on _____/___/20__

Company, by:

_____
Manager/Owner (Print Name)

_____
Signature

Cooperative RIFA Project, by:

_____
Project Officer (Print Name)

_____
Signature

CA Form Rev. 8/22/99

COOPERATIVE RED IMPORTED FIRE ANT PROJECT

Orange, Los Angeles, and Riverside County Agricultural Commissioners – CDFA – USDA
Project Headquarters – 73-710 Fred Waring Drive, 220, Palm Desert, CA 92260
PH: (760) 776-8208 FAX: (760) 776-8091

TO ALL CONCERNED WITH SOIL MOVEMENT IN ORANGE COUNTY AND THE QUARANTINED AREAS OF RIVERSIDE AND LOS ANGELES COUNTIES:

The State of California has established a Quarantine against the Red Imported Fire Ant (RIFA) in all of Orange County and parts of Los Angeles and Riverside Counties. As a result, restrictions have been placed on the movement of soil, except when commercially packaged, and products associated with soil, including baled hay that has been in direct contact with the ground, plants and sod with roots and soil with roots and soil attached, and soil-moving equipment, unless free of all noncompacted soil. These activities must be certified by RIFA Project Regulatory personnel or by the Agricultural Commissioners Office of the County of Orange, Los Angeles, or Riverside.

Certification for movement of soil from or within the quarantined area may be made by calling the Project and scheduling an inspection at least 24 hours in advance. Inspections are free and may consist of a visual survey or by trapping the area and determining if RIFA are present. Certification for movement of soil within the quarantined area will be based on the severity of RIFA in the general area where the soil is being excavated in conjunction with where the soil is to be moved. RIFA Form CA-1 (attached) may be faxed to the Project office with the appropriate information. If no RIFA are found at the site of origination, movement is permitted and a certification will be provided stating that the site found negative for RIFA. If RIFA are found at the origination site, movement is prohibited until a pesticide treatment plan is established as required by Project personnel.

There are many federal, state, county, and city governments as well as even more private companies and persons dealing in soil movement such as grading, digging, landscaping, and other building projects. If you are unsure as to whether or not your project is subject to these requirements, please fax a copy of the form CA-1 to (760) 776-8091. We will respond within 1 business day.

Thank you for your cooperation and help in this matter.

I have read and understand this document: _____
(print name)

_____
(signature)

Fax number: (____)_____

Company: _____ Phone number: (____)_____

Address: _____ Date: _____

_____ Rev. 4/12/99

Job Site
Address: _____

It is the responsibility of each person involved in the movement of soil to report the sightings of ants.
We will assign you an identification number (Compliance Agreement #) when you fax or mail in your request for an inspection.

COOPERATIVE RED IMPORTED FIRE ANT PROJECT
RIVERSIDE COUNTY AGRICULTURAL COMMISSIONER, CDFA, USDA
73-710 Fred Waring Drive Suite 220 Palm Desert, CA 92260
PH: (760) 776-8208 FX: (760) 776-8091

Protocol for Bulk Soil Shipment

1. Protein-bait trap the site intended for excavation to determine its current RIFA status.

2. If the site is positive for RIFA, Project Personnel will put the site on hold, then notify the homeowner and the contractor **(contractor is responsible for notifying any and all sub-contractors related to the job).** The homeowner or contractor will need to contact an approved Pest Control Operator (PCO) to set up a treatment with Amdro Pro (EPA # 241-322). Project will provide a list of PCO's licensed for this work in Riverside County. Leave insecticide in place for 48 hours without water being applied to area. Project staff will need to know exact location of where soil from site is going.

3. Project staff will do a follow-up inspection at the site within 5 working days after application. Homeowner or contractor will need to have receipt or documentation from PCO that the appropriate treatment was done. Project officer will take a copy of the receipt for our records. If no RIFA is detected, then the hold notice is released.

4. If RIFA is still present, an attempt will be made to locate the colony. If discovered, a mound or colony drench should be done using an approved product for Mound or Colony Treatments. If colony is not located, then another treatment should be done using a product for Broadcast Baiting following all label instructions. Leave insecticide in place for 48 hours without water being applied to area.

5. Project staff will do a follow-up inspection at the site within another 5 days. Homeowner or contractor will need to have receipt or documentation from PCO that the appropriate treatment was done. Project officer will take a copy of the receipt for our records. If no RIFA is detected, then the hold notice is released.

6. If RIFA is still present, site can be excavated, but in the presence of a Project officer. Officer will coordinate with homeowner or contractor.

Rev. 9/21/99

COOPERATIVE RED IMPORTED FIRE ANT PROJECT
Notification of Intent to Move Soil from or within Quarantined Areas of Orange, Riverside, and Los Angeles Counties

RIFA Compliance Agreement #_____

Permit # _____
Issuing City/County Agency

Name of Company Requesting Approval:_____

Contact Person: _____

Address: _____City: _____ Zip: _____

Telephone: (_____)_____ Fax: (_____)_____

Excavation Location: _____ TB*: _____

_____ ACRES: _____

_____

Destination Location:

_____ TB: _____

_____ACRES: _____

_____

Estimated Quantity of Soil (e.g. # Cubic Yards): _____

Anticipated Date of Movement: _____

Urgency Level for Immediate Inspection and Release: [Circle One] **High** **Medium** **Low**

☐ Movement of Soil is Permitted.

☐ Hold Movement Until Site Checked – WE WILL CALL AS SOON AS POSSIBLE TO SCHEDULE INSPECTION DATE AND TIME.

Date Trapped: _____ # of Traps: _____ Trapped by: _____ Acres: _____
Date Picked Up: _____ Comments: _____ PDR #: _____

☐ Soil Movement is Strictly Prohibited for the Following Reason(s):

_____

Name of RIFA Project Regulatory Official: _____ Date: _____

Signature: _____ RIFA Form CA-1
Rev.4/23/99
*TB is Thomas Brothers page and grid destination

COOPERATIVE RED IMPORTED FIRE ANT PROJECT

RIVERSIDE COUNTY AGRICULTURAL COMMISSIONER, CDFA, USDA
73-710 Fred Waring Drive Suite 220 Palm Desert, CA 92260
PH: (760) 776-8208 FX: (760) 776-8091

EXHIBIT I – SOIL COMPANY

1. Holding grounds for soil product will be protein baited and inspected by RIFA project staff not less than twice a year or as often as deemed necessary by RIFA project.
2. Broadcast application of an approved fire ant bait will be applied to all permeable surfaces in or near soil product area at least twice a year including once in early spring.
3. Soil vendor establishment will maintain accurate records of all shipments of soil products received including date received, origin of soil, address and phone number of supplier and amount of shipment received.
4. Soil vendor establishment will maintain accurate records of all out-going shipments of soil product including address and phone number of receiver, date and amount of soil delivered/sold.
5. Soil vendor establishment agrees to inspect premises monthly to detect any ant infestations and to notify RIFA project staff should any suspect RIFA be found.

Rev. 7/28/99

EXHIBIT II
APPLICATION OF PESTICIDES FOR USE AGAINST RED IMPORTED FIRE ANTS

The City does not recommend any specific pesticide for the treatment of Red Imported Fire Ants. Any pesticide(s) utilized for treatment of Red Imported Fire Ants require a written recommendation from a State of California Licensed Pest Control Advisor. Application of any pesticide(s) utilized for treatment of Red Imported Fire Ants shall be performed by, or supervised by, a State of California Pest Control Operator with a current Qualified Applicator License.

APPENDIX V

SOLID WASTE DISPOSAL AND RECYCLING REPORTS

Construction & Demolition Waste Recycling Facilities

Riverside & San Bernardino Counties

Riverside County

Agriscape
18712 Bridge Street, Lakeview
(951) 696.0651
Accepts: *Wood, Green Waste*

Asphalt & Concrete Recycling
1871 Warren Road, San Jacinto
(951) 654.6869
Accepts: *Asphalt, Brick, Concrete (with rebar), Dirt, Toilets*

Badlands Sanitary Landfill
31125 Ironwood Avenue, Moreno Valley
(800) 304.2226
Requires inspection prior to accepting material
Accepts: *Asphalt, Concrete*

B.P. John Hauling—Romoland
28700 Matthews Road, Romoland
(951) 928.1094
Accepts: *Asphalt, Brick, Concrete*

Burrtec Waste—Robert A. Nelson Transfer Station
1830 East Agua Mansa Road, Riverside
(951) 786.0554
Accepts: *Dirt, Concrete, Fiber, Glass, Boats*

Copp Materials, Inc. —Prado Plant
11901 Highway 71, Corona
(951) 736.7419
Accepts: *Asphalt, Clean Concrete*

Ecology Auto Parts
23332 Cajalco Rd., Perris
(951) 657.7725
Accepts: *Ferrous and Non-Ferrous Metals*

Geo-Engleauf Construction Specialists
5610 Market Street, Riverside
(951) 681.1332
Accepts: *Asphalt, Concrete, Dirt, Rocks, Toilets*

Granite Construction Company
3800 Monroe Street, Indio
(760) 775.7500
Accepts: *Asphalt, Concrete*

Greenstone Materials, Inc.
1420 Nandina Avenue, Perris
(951) 943.1500
Accepts: *Asphalt, Brick, Concrete, Rock*

Habitat For Humanity
2121 Atlanta Boulevard, Riverside
(951) 787.6754 (x115)
Accepts: *Building, Roofing, Fencing, Lighting, Furniture, Other C&D Materials*

Perris Transfer Station
1706 Goetz Rd, Perris
(951) 943.1991
Accepts: *Wood*

Lamb Canyon Sanitary Landfill
16411 Lamb Canyon Rd., Beaumont
(800) 304.2226
Requires inspection prior to accepting material
Accepts: *Asphalt, Concrete*

Philadelphia Recycling Mine
12000 Philadelphia Street, Mira Loma
(951) 685.8343
Accepts: *Asphalt, Brick, Concrete, Dry-wall, Tiles*

Riverside Scrap and Iron
2993 6th Street, Riverside
(951) 686.2129
Accepts: *Aluminum, Glass, Metal, Newspapers*

Waste Management Transfer Station
17700 Indian Street, Moreno Valley
(951) 242.0421
Accepts: *All recyclables*

San Bernardino County

Apollo Wood Grinding
13303 San Bernardino Road, Fontana
(909) 356.2735
Accepts: *Green, Wood Waste*

Colton Iron & Metal
790 East M Street, Colton
(909) 825.1662
Accepts: *Metal*

Ecology Auto Parts
Colton
785 E. M St., Colton
(909) 823.9913
Accepts: *Ferrous, Non Ferrous Metals*

Fontana
14187 Slover Ave., Fontana
(909) 823.9913
Accepts: *Ferrous, Non-Ferrous Metals*

Hesperia
11099 “G” Ave., Hesperia
(760) 947.3099
Accepts: *Ferrous and Non-Ferrous Metals*

Victorville
17228 Ranch Rd., Victorville
(909) 843.3306
Accepts: *Ferrous and Non-Ferrous Metals*

Main Street Fibers
608 East Main Street, Ontario
(909) 986.6310
Accepts: *Metal, Glass, Paper, Plastic*

One Stop Landscape Supply
13024 San Timoteo Canyon Road, Redlands
(909) 798.1278
Accepts: *Green Waste*

Simsmetal America
Etiwanda
8822 Etiwanda Avenue, Rancho Cucamonga
(909) 899.1767
Accepts: *Appliances, Metal*

Fontana
15615 Arrow Boulevard, Fontana
(909) 823.3431
Accepts: *Appliances, Metal*

Tamco
12459 Arrow Highway, Rancho Cucamonga
(909) 899.0660
Accepts: *Metal*

This list of construction recycling facilities has been compiled as a convenience. It consists of all known facilities within Riverside and San Bernardino counties who provide C&D recycling services and weight tickets to customers. The City does not endorse any specific facility. If you would like to be added to this resource list, please contact the City's Public Works Department, Recycling Program by calling 951.413.3109.

City of Moreno Valley
PUBLIC IMPROVEMENT
MONTHLY SOLID WASTE DISPOSAL AND RECYCLING REPORT

1

Project Name:	Project Number:	Ongoing Report ☐ Final Report ☐
	Type of Work:	Report for Month/Year:
Contractor Name	Phone Number:	Fax:
Street Address	City, State, Zip	
Contractor Certification: I certify under penalty of perjury that the information provided in this form is complete and accurate.		
Signature	Print Name and Title:	Date of Report:

2

*NOTE: Earth and Rock material must not be reported as either waste material diverted from or disposed to lnadfills.

NAME AND LOCATION OF RECYCLING OR DISPOSAL FACILITY (OR ENTER "REUSED" FOR MATERIALS GENERATED AND REUSED ON THIS JOB)	CHECK IF LANDFILL	CHECK IF RECYCLER	TYPE OF MATERIAL (Please enter a letter for each type on a separate line): A =Asphalt Concrete; B = Building Material C = Portland Cement Concrete; M = Metal; D = Mixed Debris; W = Wood/Cleared Vegetation; O = Other (Please Describe) **See note above**	TYPE OF ACTIVITY (Please enter one activity per line) 1 = Source - Separated Materials Recycling 2 = On-Site Reuse 3 = Mixed Debris Recycling 4 = Reuse of Salvageable Items 5 = Disposal at Landfill 6 = Transfer to Station 7 = Other (Please Describe)	AMOUNT TAKEN TO LANDFILL (TONS)	AMOUNT DIVERTED FROM LANDFILLS TO A RECYLCING FACILITY (TONS)	AMOUNT GENERATED AND THEN REUSED ON THIS JOB (TONS)	TOTAL (TONS)	% DIVERTED
TOTAL									

3

I have reviewed the iformaion submitted in this report for completeness.

Project Engineer (Please Print):	Phone Number:
Signature:	Date:

City of Moreno Valley

SOLID WASTE DISPOSAL AND RECYCLING REPORT - INSTRUCTIONS

Section 1: To be completed by the contractor

Project Name: Give a brief description of the project.

Type of Work: Enter a general work description, e.g. "AC Grinding" Widening, Reconstruction, Overlay

Ongoing Report: Checking this box means this is a report for a continuing project. More monthly reports will follow.

Final Report: Checking this box means this is the last report before contract acceptance.

Project Number: Enter Project Number

Report for Month/Year: The month/year for which data was collected [Note: A separate report is needed for each month].

Company Information: Contractor Name, Phone Number, Fax Number, Street Address, City, State and Zip

Contractor Certification: I certify under penalty of perjury that the information provided in this form is complete and accurate.

Contractor should verify the data entered on this form, then sign the report and print your name, title, and date.

Return this report to the project engineer by the 10th of the following month or within 15 days of final work.

Section 2: To be completed by the contractor

To count towards diversion, "solid waste" is defined as including any solid waste which would normally be disposed of at a disposal facility (PRC Section 41781 (b))

NAME AND LOCATION OF RECYCLING OR DISPOSAL FACILITY (or enter "reused" for materials generated and reused on this job)

Each address should be checked as either landfill or recycler. When using a recycling facility that exists inside a landfill, check recycler and do not check landfill. When the solid waste is generated and reused on the job, the word "Reused" should be entered in place of the address.

TYPE OF MATERIAL Please enter a number for each activity one per line:

1 = Source-Separated Materials Recycling; 2 = On-Site Reuse; 3 = Mixed Debris Recycling; 4 = Reuse of Salvageable Items; 5 = Disposal at Landfill 6 = Transfer Station; 7 = Other [Describe the activity when "Other" is selected]"

AMOUNT TAKEN TO LANDFILL (Tons): Enter the amount of any solid waste, in tons, that is generated on this project and taken to a landfill and attach copies of weight tickets.

AMOUNT DIVERTED FROM LANDFILLS TO A RECYCLING FACILITY (Tons): Enter the amount of any solid waste, in tons, that is generated on this project and taken to a recycling facility and attach copies of weight tickets.

Solid waste from this job that is used in other projects, given to other agencies (county, city etc.) or given to private individuals for reuse will be entered as taken to a recycling facility. In this case, check the activity as "Other" and describe who gets the solid waste in the row for other activity. (e.g. given to county, city or developer)

AMOUNT GENERATED AND THEN REUSED ON THIS JOB (Tons): Enter the amount of any solid waste, in tons, that is generated on this project and reused.

TOTAL (TONS) Total amount taken to landfill + amount recycled + amount reused.

% DIVERTED Total recycled + total reused ÷ total tons x 100

These conversion factors may be found at the California Integrated Waste Management Board's (CIWMB) web site at:
http://www.ciwmb.ca.gov/LGLibrary/DSG/Apndxl.htm#Conversion

Section 3: To be completed by the project engineer

I have reviewed the information submitted in this report for completeness.

Project engineer please review the report. If the form is complete, sign and print your name, phone number, and date. Discuss and resolve with the contractor any deficiency on the form.

The project engineer shall submit the completed form to the appropriate City representative by the 20th of the following month or within 30 days of final work.

City of Moreno Valley

PUBLIC IMPROVEMENT

DAILY/WEEKLY SOLID WASTE RECYCLING REPORT

Project Name: (Insert Name)

Month/Year: _____

Project No.: (Insert Number)

Type of Material: _____

Page___of ____

Contractor/Subcontractor: _____

Date		Name & Location of Recycling Facility	Tons
Monday			
Tuesday			
Wednesday			
Thursday			
Friday			
Saturday			
Week Total			

Contractor is to submit the report weekly with delivery ticket.

City of Moreno Valley
Public Improvement
DAILY SOLID WASTE RECYCLING REPORT

Project Name: (Insert Name)

Project No.: (Insert Number)

Date:_____

Contractor:_____

Subcontractor:_____

Month/Year:

Material	To Landfill (Tons)	Recycled (Tons)	Resused (Tons)	Disposed (tons)	Total Quantity Generated (Tons)	Facility Used/Destination
	A	B	C	A+B	A+B+C	
	Weight	Weight	Weight	Weight	Weight	
Example: Dirt	5 tons	5 tons	9.5 tons	10 tons	24.5 tons	Recycle - Azusa Land Reclamation Reuse - On Job Site for Grading Dispose - Puente Hills Landfill
Asphalt Concrete						
Brick						
Building Materials (ceiling tile, fixtures, etc.)						
Cardboard, paper						
Carpet/Carpet Padding						
Concrete (PCC)						
Dirt						
Glass						
Green Waste						
Gypsum/Dry Wall						
Metals						
Mixed C&D (commingled, recyclable						
Plastic						
Rock						
Roofing						
Tile (ceramic)						
Wood (lumber, doors,etc.)						
Refuse		NA	NA	NA		
Other						
Totals						

Use your daily weight receipts to fill in the table below and submit receipts attached with this form.

Total Recycled _____ + Total Reused _____ = _____ ÷ Total Quantity Generated _____ x 100 = _____%

City of Moreno Valley
Public Improvement
DAILY/WEEKLY SOLID WASTE RECYCLING REPORT

Use your daily weight receipts to fill in the table below and submit receipts attached with this form.

Project Name: Contractor:

Project No. Subcontractor:

Month/Year:

Material	Recycled		Resused		Disposed (tons)	Total Quantity Generated	Facility Used/Destination
	Volume	Weight	Volume	Weight			
Example: Dirt 10yd³ = 18,900lbs	NA	5 tons	10yd³	9.5 tons	10 tons	24.5 tons	Recycle - Azusa Land Reclamation Reuse - on job site for grading Dispose - Puente Hills Landfill
Asphalt 1yd³ = 1,380lbs							
Brick 1yd³ = 3,024lbs							
Building Materials (ceiling tile, fixtures, etc.)							
Cardboard, paper 1yd³ = 100lbs							
Carpet/Carpet Padding 1yd³ = 84.4lbs							
Concrete 1yd³ = 1,855lbs							
Dirt 10yd³ = 18,900lbs							
Glass 1yd³ = 2,160lbs							
Green Waste 40yd³ = 4,320lbs							
Gypsum/Dry Wall 1yd³ = 3,834lbs							
Metals 1yd³ = 906lbs							
Mixed C&D (commingled, recyclable							
Plastic 1yd³ = 22.55lbs							
Rock 1yd³ = 2,570lbs							
Roofing 1yd³ = 418.5lbs							
Tile (ceramic) 1yd³ = 1,214lbs							
Wood (lumber, doors,etc.) 1yd³ = 329.5lbs							
Refuse	NA	NA	NA	NA			
Other							
Totals							

Total Recycled _____ + Total Reused _____ = _____ ÷ Total Quantity Generated _____ x 100 = _____%

APPENDIX W

CITY STANDARD PLANS

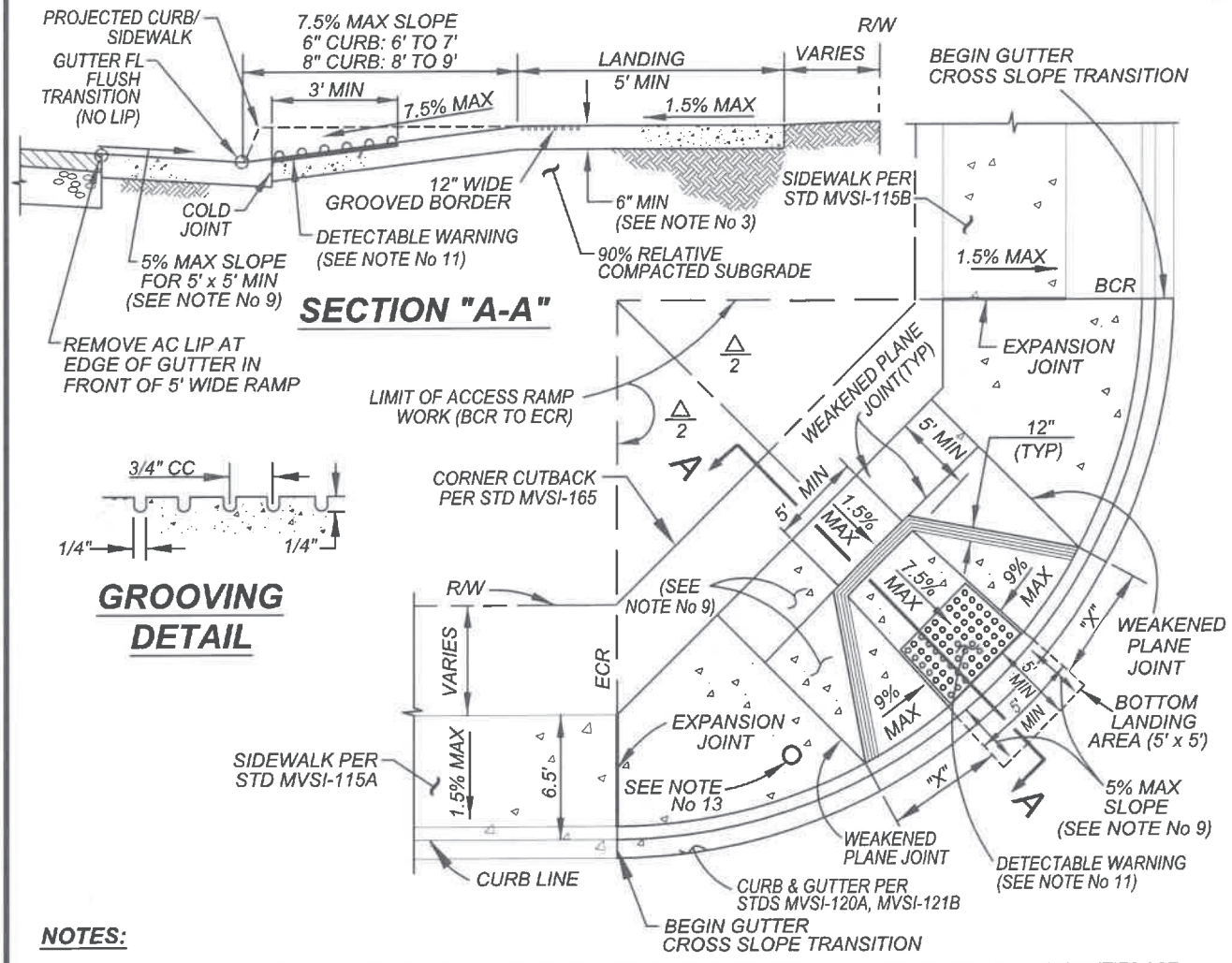

NOTES:

1.) ALL ACCESS RAMPS SHALL BE CONSTRUCTED TO THE MOST CURRENT REQUIREMENTS OF THE AMERICANS WITH DISABILITIES ACT (ADA) STANDARDS/CALIFORNIA CODE OF REGULATIONS TITLE 24-ACCESSIBILITY REGULATIONS. ADJUSTMENTS SHALL BE MADE IN THE FIELD TO ACHIEVE RAMP CONDITIONS.
2.) CONCRETE SHALL BE CLASS 560-C-3250, CURED WITH WHITE PIGMENTED CURING COMPOUND OVER 90% RELATIVE COMPACTION.
3.) THICKNESS OF RAMP AND LANDING AREAS AROUND THE RAMP WITHIN THE CURB RETURN, FROM BCR TO ECR, SHALL BE 6" MINIMUM. RAMP AND LANDING AREAS SHALL BE POURED MONOLITHIC.
4.) A 4' MINIMUM DEPTH LANDING IS REQUIRED AT THE TOP OF THE RAMP OVER THE ENTIRE RAMP WIDTH. CROSS SLOPE OF LANDING MAY NOT EXCEED 1.5% IN ANY DIRECTION.
5.) RAMP SIDES ALONG "X" SHALL HAVE A MAXIMUM SLOPE OF 10%.
6.) GROOVED BORDER SHALL BE 12" WIDE ALONG THE TOP AND SIDES OF THE RAMP AT THE LEVEL SURFACE OF THE SIDEWALK. OMIT GROOVES ADJACENT TO NON-PAVED AREAS.
7.) RAMP SURFACE AND FLARED SIDES SHALL BE SLIP-RESISTANT (ROUGH BROOM FINISH OR EQUIVALENT) AND SHALL BE OF CONTRAST FINISH FROM ADJACENT SIDEWALK (MEDIUM BROOM FINISH).
8.) SEE STANDARD PLAN MVLT-432 FOR CROSSWALK LOCATION DETAIL. SEE STANDARD PLAN MVSI-165 FOR R/W CORNER CUT-BACK.
9.) SLOPES JOINING BOTTOM OF THE RAMP (I.E. ROAD GUTTERS) SHALL NOT EXCEED 5%. THE SLOPES JOINING TOP OF RAMP SHALL NOT EXCEED 1.5%.
10.) DIMENSIONS SHOWN FOR SLOPING PORTIONS OF RAMP VARY DUE TO FIELD CONDITIONS.
11.) DETECTABLE WARNING SURFACES ARE REQUIRED ON ALL CURB RAMPS THAT ENTER INTO A VEHICULAR TRAVELED WAY. SEE STANDARD PLAN MVSI-114C FOR DETECTABLE WARNING SURFACE DETAILS AND NOTES.
12.) FOR NEW ACCESS RAMPS ON EXISTING STREETS, A 12" WIDTH OF PAVEMENT SHALL BE REMOVED AND REPLACED TO FULL DEPTH FOR CONSTRUCTION OF CURB AND GUTTER.
13.) FOR TRAFFIC SIGNAL LOCATIONS, A 30"x48" 2% MAXIMUM LANDING AREA SHALL BE LOCATED ADJACENT TO THE PEDESTRIAN PUSH BUTTON.

NOT TO SCALE

CITY OF MORENO VALLEY DECEMBER 3, 1984	RECOMMENDED: Henry Ngo 8/14/19 DIVISION MANAGER DATE	CITY OF MORENO VALLEY PUBLIC WORKS DEPARTMENT - CAPITAL PROJECTS DIVISION
	APPROVED: [signature] 10/11/19 PUBLIC WORKS DIRECTOR / CITY ENGINEER DATE	**ACCESS RAMP - TYPE 1** — STANDARD PLAN **MVSI-114A-2** — SHEET 1 OF 4

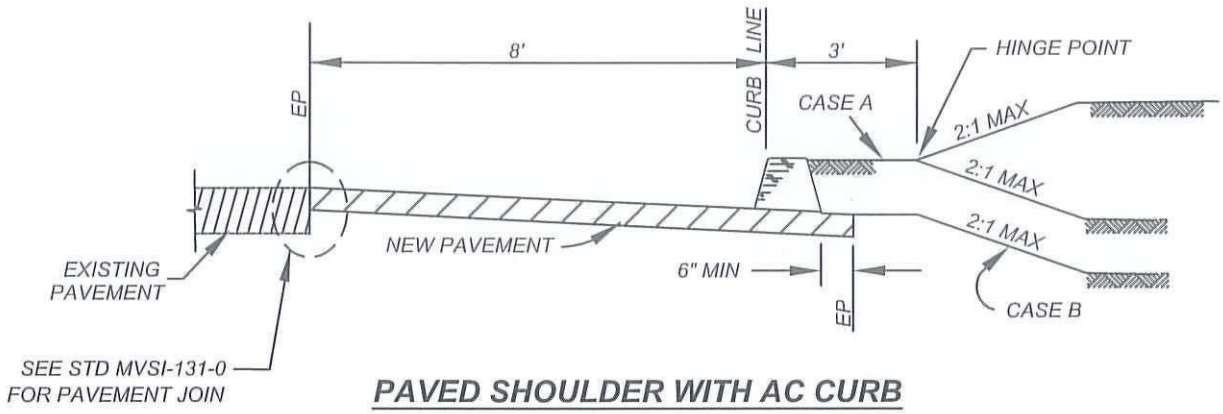

PAVED SHOULDER WITH AC CURB

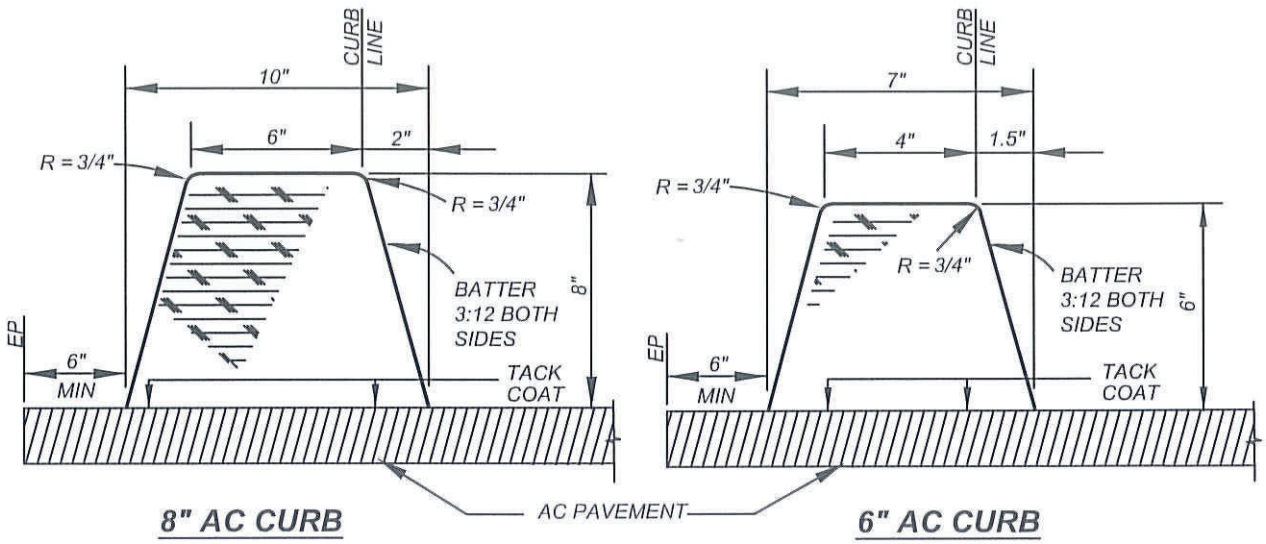

8" AC CURB

6" AC CURB

NOTES:

1.) THE ASPHALT CONCRETE MIXTURE SHALL BE TYPE III D-PG 70-10 WITH A MINIMUM ASPHALT BINDER OF 5.8 PERCENT.

2.) PRIOR TO PLACEMENT, A TACK COAT SHALL BE APPLIED TO THE EXISTING SURFACE. TACK COAT SHALL BE PG 64-10 AT AN APPROXIMATE RATE OF 0.05 GALLON PER SQUARE YARD OR GRADE SS-1h EMULSIFIED ASPHALT AT AN APPROXIMATE RATE OF 0.05 TO 0.10 GALLON PER SQUARE YARD.

3.) THE TEMPERATURE OF THE MIX AT THE TIME OF PLACEMENT SHALL NOT BE LESS THAN 250°F OR MORE THAN 285° F.

4.) ALL EXTRUDERS AND SHOES SHALL BE APPROVED BY THE CITY ENGINEER.

5.) USE CASE A BACKFILL UNLESS NOTED OTHERWISE.

NOT TO SCALE

CITY OF MORENO VALLEY DECEMBER 3, 1984	RECOMMENDED: DIVISION MANAGER 1/21/14 DATE APPROVED: PUBLIC WORKS DIRECTOR / CITY ENGINEER 1/29/14 DATE	CITY OF MORENO VALLEY PUBLIC WORKS DEPARTMENT - CAPITAL PROJECTS DIVISION ASPHALT CONCRETE CURB
		STANDARD PLAN MVSI-124-0 SHEET 1 OF 1

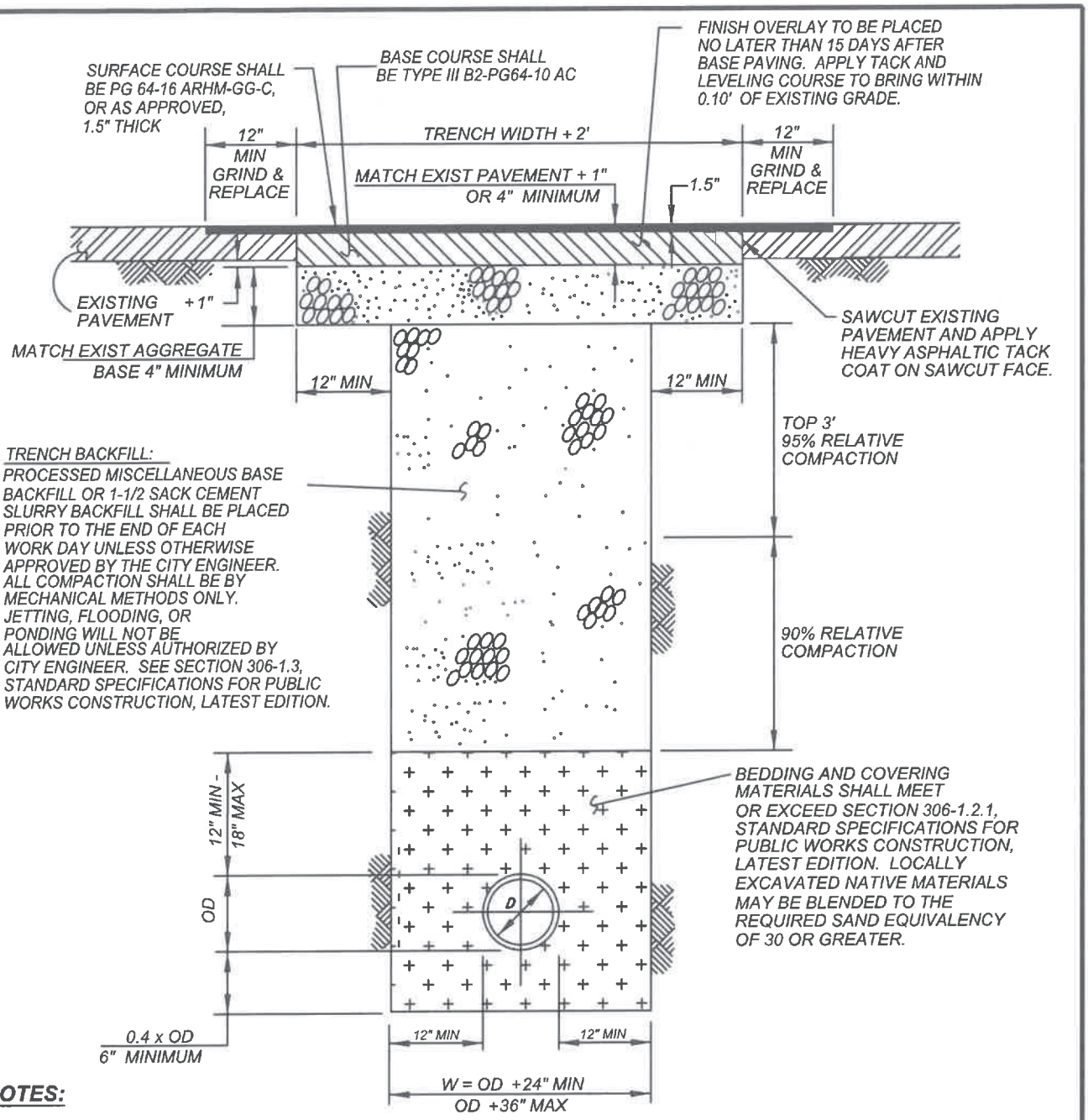

NOTES:

1.) SEE ADDITIONAL REQUIREMENTS, STD No MVSI-132C.

2.) ALL TRENCHES SHALL HAVE PROCESSED MISCELLANEOUS BASE BACKFILL OR 1-½ SACK CEMENT SLURRY BACKFILL UNLESS OTHERWISE APPROVED BY THE CITY ENGINEER.

3.) ALL TRENCHING AND BACKFILL SHALL BE DONE IN ACCORDANCE WITH SECTION 306, STANDARD SPECIFICATIONS FOR PUBLIC WORKS CONSTRUCTION, LATEST EDITION.

4.) ALL TEMPORARY PAVING SHALL HAVE A MINIMUM 2" OF AC ON LOCAL STREETS AND 3" ON ALL OTHERS, UNLESS PERMANENT PAVEMENT IS PLACED IMMEDIATELY.

5.) NEW FINISH ARHM OVERLAY AT ENDS OF TRENCH SHALL BE EXTENDED TO FULL WIDTH OF EXISTING BIKE LANES OR NEAREST LANE LINE AS DIRECTED BY THE CITY ENGINEER.

NOT TO SCALE

CITY OF MORENO VALLEY DECEMBER 3, 1984	RECOMMENDED: MDL 10/20/20 DIVISION MANAGER / DATE APPROVED: [signature] 10/22/20 PUBLIC WORKS DIRECTOR / CITY ENGINEER / DATE	CITY OF MORENO VALLEY PUBLIC WORKS DEPARTMENT - CAPITAL PROJECTS DIVISION **PERPENDICULAR TRENCH BACKFILL AND ROADWAY REPAIR**
		STANDARD PLAN **MVSI-132A-2** SHEET 1 OF 6

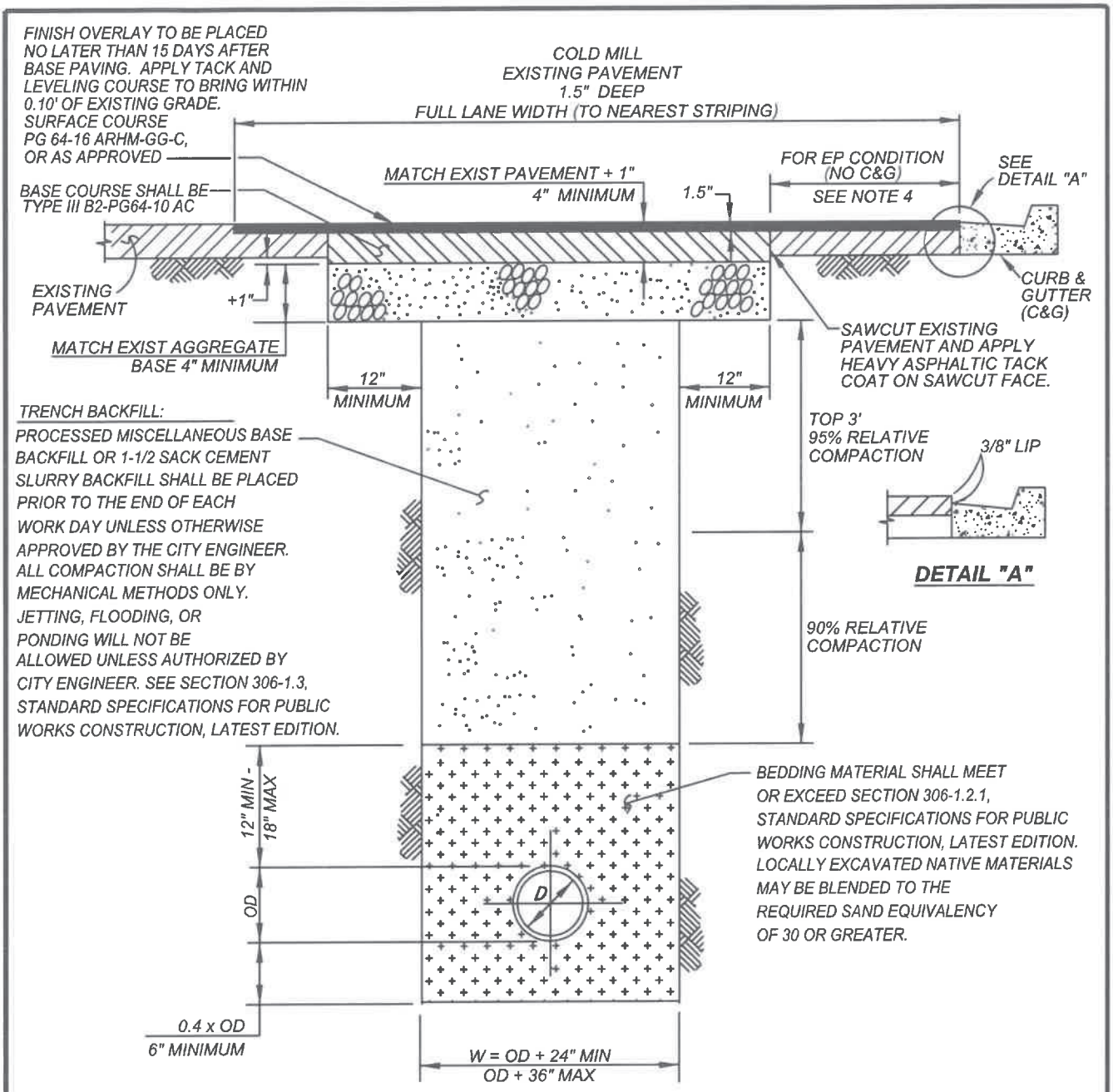

NOTES:

1.) SEE ADDITIONAL REQUIREMENTS, STD No MVSI-132C.
2.) ALL TRENCHING AND BACKFILL SHALL BE DONE IN ACCORDANCE WITH SECTION 306, STANDARD SPECIFICATIONS FOR PUBLIC WORKS CONSTRUCTION, LATEST EDITION.
3.) ALL TEMPORARY PAVING SHALL HAVE A MINIMUM 2" OF AC ON LOCAL STREETS AND 3" ON ALL OTHERS.
4.) FOR EDGE OF PAVEMENT (EP) CONDITION (NO CURB AND GUTTER), REMOVE AND REPLACE FULL DEPTH PAVEMENT (AB AND AC) REMNANTS UP TO 6'.

NOT TO SCALE

CITY OF MORENO VALLEY DECEMBER 3, 1984	RECOMMENDED: MDL 10/13/20 DIVISION MANAGER / DATE APPROVED: 10/22/2020 PUBLIC WORKS DIRECTOR / CITY ENGINEER / DATE	CITY OF MORENO VALLEY PUBLIC WORKS DEPARTMENT - CAPITAL PROJECTS DIVISION **PARALLEL TRENCH BACKFILL AND ROADWAY REPAIR**	STANDARD PLAN **MVSI-132B-3** SHEET 2 OF 6

REQUIREMENTS
FOR TRENCHES OR OTHER EXCAVATIONS WITHIN
PUBLIC RIGHTS-OF-WAY OR EASEMENTS

ALL WORK AND MATERIAL SHALL BE IN ACCORDANCE WITH THE "STANDARD SPECIFICATIONS FOR PUBLIC WORKS CONSTRUCTION," LATEST EDITION, UNLESS OTHERWISE SPECIFIED, INCLUDING AMENDMENTS AND SUPPLEMENTS THERETO, EXCEPTING AS HEREBY SUPPLEMENTED AND AMENDED.

A. STANDARD REQUIREMENTS

1. **BEDDING**: BEDDING SHALL BE DEFINED AS THAT MATERIAL SUPPORTING, SURROUNDING AND EXTENDING TO ONE FOOT ABOVE THE FACILITY. EXCEPT WHERE CONCRETE ENCASEMENT IS USED, MATERIALS USED FOR BEDDING SHALL BE SAND, GRAVEL, CRUSHED AGGREGATE, NATIVE FREE-DRAINING AND GRANULAR MATERIAL HAVING A SAND EQUIVALENT OF NOT LESS THAN THIRTY (30).

2. **BACKFILL**: BACKFILL SHALL BE DEFINED AS THAT MATERIAL ON AND ABOVE THE BEDDING AND EXTENDING TO THE SUBGRADE FOR REPLACEMENT OF PUBLIC IMPROVEMENTS OR TO FINISH GRADE WHERE NO PUBLIC IMPROVEMENTS EXIST. MATERIALS USED FOR BACKFILL: IN ACCORDANCE WITH THE STANDARD SPECIFICATIONS AND THIS STANDARD PLAN.

B. REPLACEMENT REQUIREMENTS

1. **BASE**: BASE MATERIAL REPLACEMENT SHALL BE NO LESS IN THICKNESS THAN THE EXISTING AND IN NO CASE LESS THAN FOUR INCHES IN THICKNESS AND SHALL BE CLASS 2 AGGREGATE BASE PER SECTION 25 OF CALTRANS STANDARD SPECIFICATIONS, LATEST EDITION. CERTIFICATION SHALL BE REQUIRED THAT THIS MATERIAL MEETS THE SPECIFICATIONS.

2. **PAVEMENT**: PERMANENT PAVEMENT REPLACEMENT SHALL BE NO LESS IN THICKNESS THAN THE EXISTING PLUS ONE INCH AND, IN NO CASE, LESS THAN FOUR INCHES IN THICKNESS FOR BITUMINOUS ROADWAYS AND SHALL BE INSTALLED TO SAWCUT LIMITS PER CITY STANDARD AS FOLLOWS:

a.) PERMANENT ASPHALT PAVEMENT REPLACEMENT SHALL BE BASE COURSE TYPE III, B2-PG64-10, SURFACE COURSE PG 64-16 ASPHALT RUBBER HOT MIX (ARHM-GG-C), OR AS APPROVED BY THE CITY ENGINEER.

b.) WHEN TEMPORARY PAVEMENT RESURFACING IS PLACED, IT SHALL BE REMOVED AND PERMANENT PAVEMENT REPLACEMENT PLACED WITHIN A PERIOD NOT-TO-EXCEED FIFTEEN (15) WORKING DAYS FOLLOWING THE PLACEMENT OF THE TEMPORARY PAVEMENT. TEMPORARY PAVING WILL BE MAINTAINED BY THE CONTRACTOR TO PROVIDE A SAFE, SMOOTH RIDE.

c.) TRENCHES WITHIN 25 FEET OF EACH OTHER SHALL REQUIRE A 0.15' GRIND AND ARHM OVERLAY FOR THE ENTIRE AREA BETWEEN TRENCHES.

3. **STRIPING**: ANY DISTURBED/DAMAGED STRIPING DUE TO TRENCHING WORK SHALL BE RESTORED AND REFRESHED TO THE ENGINEER'S SATISFACTION.

4. **TESTING**: ALL TESTING SHALL BE PROVIDED BY THE CONTRACTOR. COMPACTION REPORTS SHALL BE SUBMITTED TO THE CITY ENGINEER.

5. **PROHIBITION OF PAVEMENT CUTTING**: ASPHALT CONCRETE PAVEMENT LESS THAN THREE (3) YEARS OLD SHALL NOT BE CUT EXCEPT FOR EMERGENCY REPAIRS OR AS SPECIFICALLY APPROVED IN WRITING BY THE CITY ENGINEER. SPECIAL REQUIREMENTS WILL BE IMPOSED FOR REPAVING.

NOT TO SCALE

CITY OF MORENO VALLEY DECEMBER 1, 1984	RECOMMENDED: DIVISION MANAGER — DATE 10/17/20 APPROVED: PUBLIC WORKS DIRECTOR / CITY ENGINEER — DATE 10/29/2020	CITY OF MORENO VALLEY PUBLIC WORKS DEPARTMENT - CAPITAL PROJECTS DIVISION **TRENCH BACKFILL AND ROADWAY REPAIR NOTES**	STANDARD PLAN **MVSI-132C-2** SHEET 3 OF 6

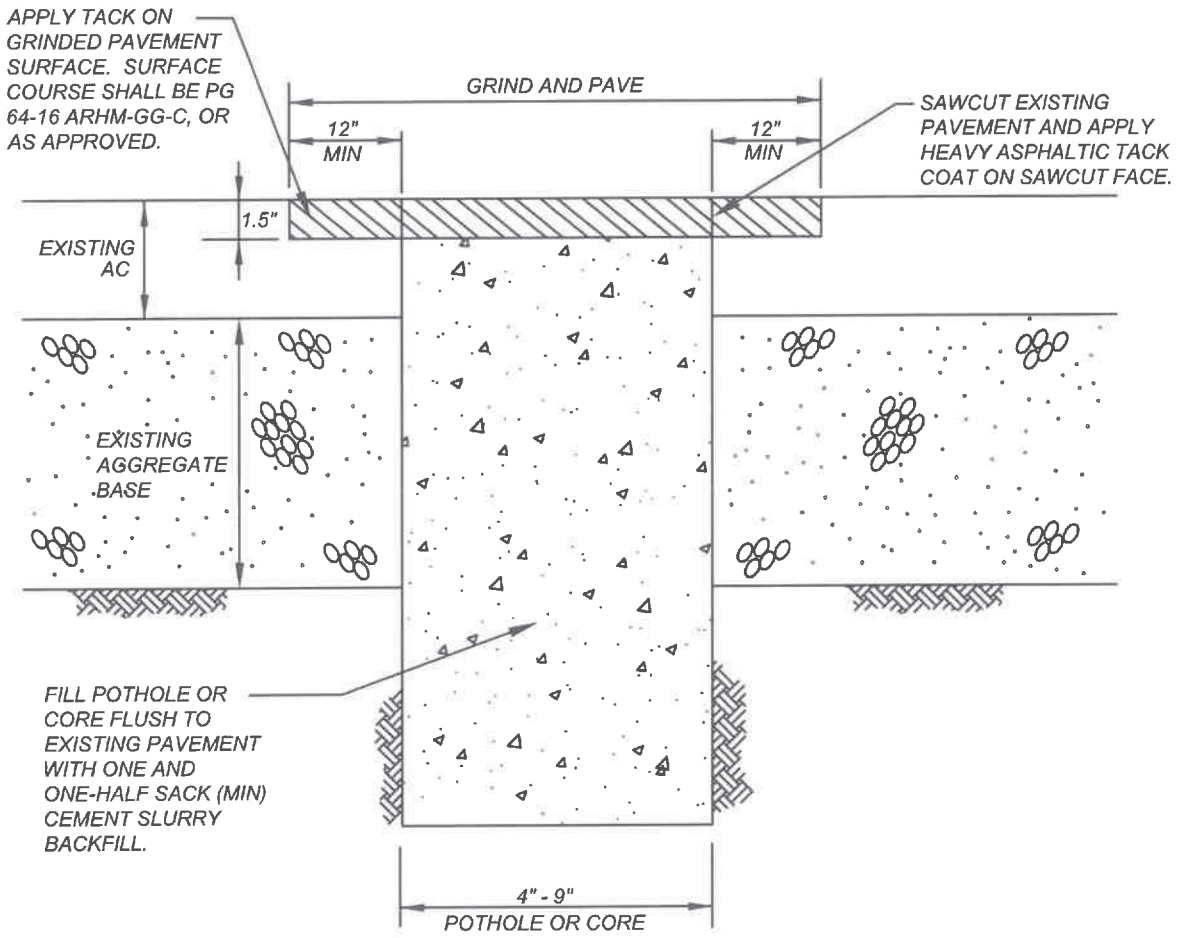

NOTE:

1.) SEE TRENCH BACKFILL AND ROADWAY REPAIR NOTES STD No MVSI-132C.
2. WHEN MULTIPLE POTHOLES SPACED 24" OR LESS ARE RUN PARALLEL TO THE TRAFFIC LANE, STANDARD PLAN MVSI-132B SHALL BE USED.

NOT TO SCALE

CITY OF MORENO VALLEY DECEMBER 3, 1984	RECOMMENDED: MDL 10/13/20 DIVISION MANAGER DATE	CITY OF MORENO VALLEY PUBLIC WORKS DEPARTMENT - CAPITAL PROJECTS DIVISION
	APPROVED: M.L. Wolfe 10/28/2020 PUBLIC WORKS DIRECTOR / CITY ENGINEER DATE	**UTILITY POTHOLE OR PAVEMENT CORE REPAIR**
		STANDARD PLAN **MVSI-132D-1**
		SHEET 4 OF 6

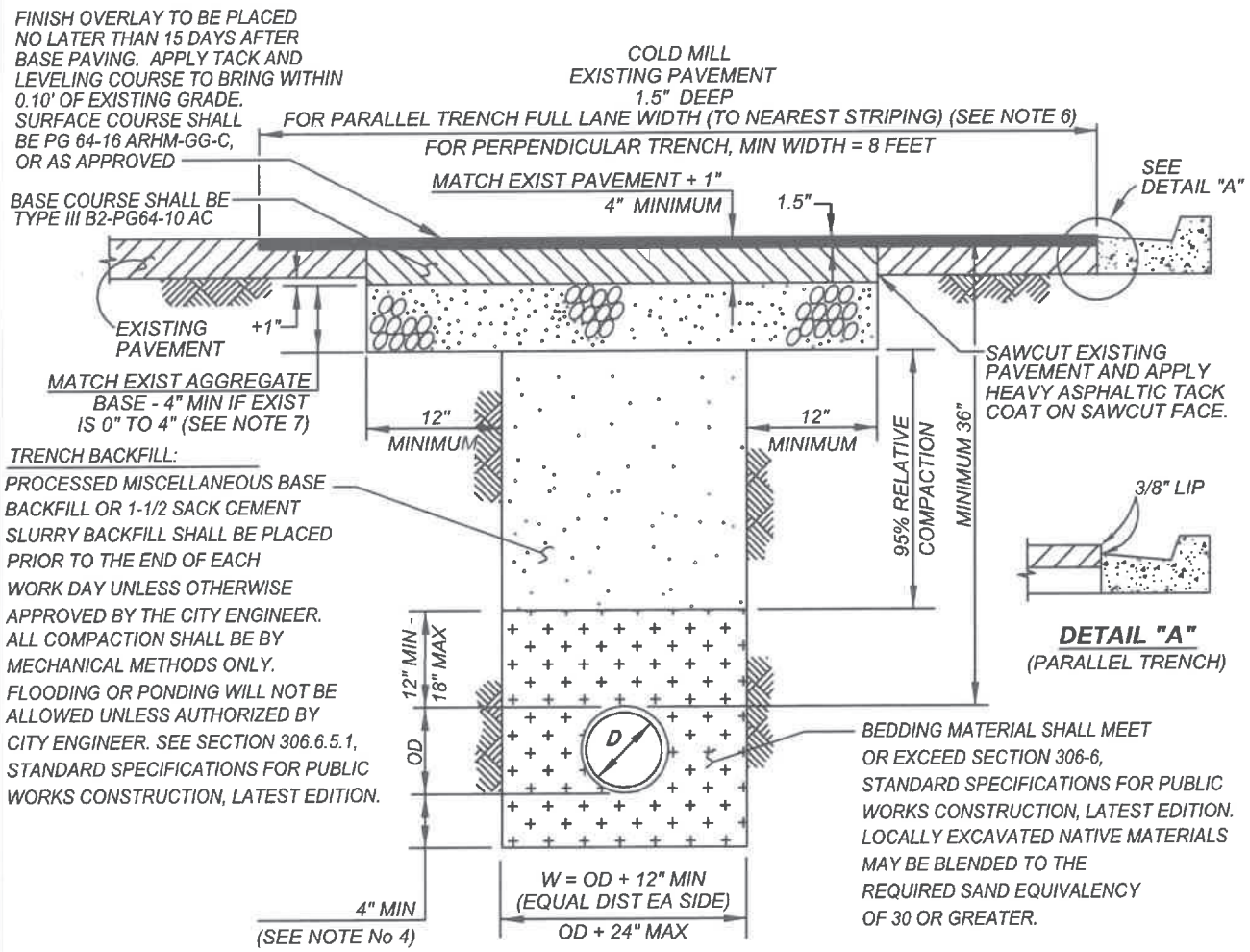

NOTES:

1.) SEE ADDITIONAL REQUIREMENTS, STD No MVSI-132C.

2.) ALL TRENCHING AND BACKFILL SHALL BE DONE IN ACCORDANCE WITH SECTION 306, STANDARD SPECIFICATIONS FOR PUBLIC WORKS CONSTRUCTION, LATEST EDITION.

3.) ALL TEMPORARY PAVING SHALL HAVE A MINIMUM 2" OF AC ON LOCAL STREETS AND 3" ON ALL OTHERS.

4.) INCREASE BEDDING UNDER PIPE FROM 4" TO 6" FOR ROCK SUBGRADES.

5.) USE THIS STANDARD PLAN FOR UP TO AND INCLUDING 12" DIAMETER WATER LINE WITH 36" COVER OVER PIPE.

6.) LANE WIDTH REQUIREMENT MAY BE REDUCED AT DISCRETION OF CITY ENGINEER.

7.) 1-1/2 SACK CEMENT SLURRY MAY BE USED IF USED FOR TRENCH BACKFILL.

NOT TO SCALE

RECOMMENDED: DIVISION MANAGER — DATE 10/13/20

APPROVED: PUBLIC WORKS DIRECTOR / CITY ENGINEER — DATE 10/29/2020

CITY OF MORENO VALLEY

PUBLIC WORKS DEPARTMENT - CAPITAL PROJECTS DIVISION

WATER LINE (UP TO 12" DIA) TRENCH BACKFILL AND ROADWAY REPAIR

STANDARD PLAN

MVSI-132E-2

SHEET 5 OF 6

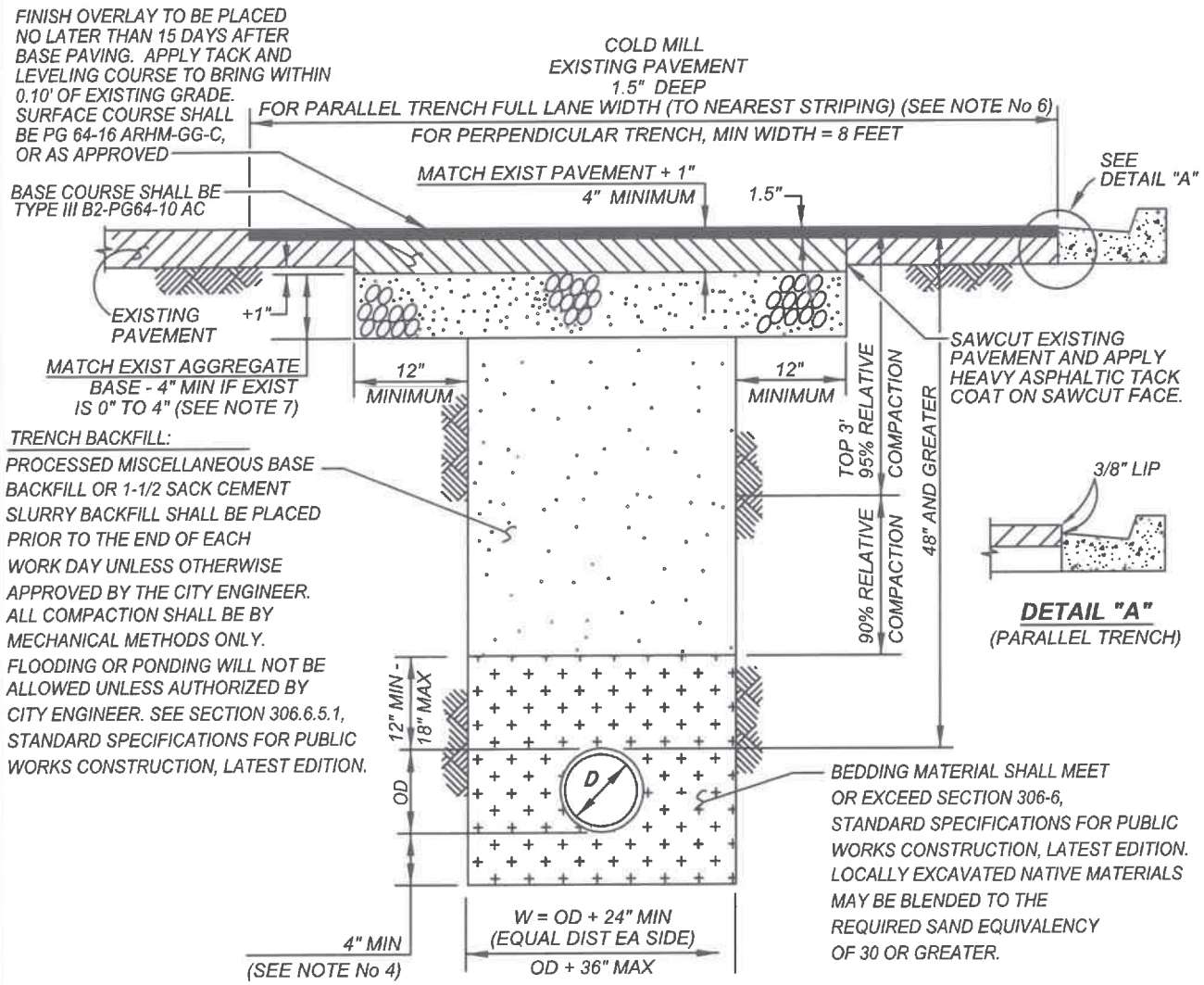

NOTES:

1.) SEE ADDITIONAL REQUIREMENTS, STD No MVSI-132C.

2.) ALL TRENCHING AND BACKFILL SHALL BE DONE IN ACCORDANCE WITH SECTION 306, STANDARD SPECIFICATIONS FOR PUBLIC WORKS CONSTRUCTION, LATEST EDITION.

3.) ALL TEMPORARY PAVING SHALL HAVE A MINIMUM 2" OF AC ON LOCAL STREETS AND 3" ON ALL OTHERS.

4.) INCREASE BEDDING UNDER PIPE FROM 4" TO 6" FOR ROCK SUBGRADES.

5.) USE THIS STANDARD PLAN FOR WATER LINE OF GREATER THAN 12" DIAMETER. MINIMUM COVER OVER PIPE IS 48".

6.) LANE WIDTH REQUIREMENT MAY BE REDUCED AT DISCRETION OF CITY ENGINEER.

7.) 1-1/2 SACK CEMENT SLURRY MAY BE USED IF USED FOR TRENCH BACKFILL.

NOT TO SCALE

CITY OF MORENO VALLEY DECEMBER 3, 1984	RECOMMENDED: MDL 10/13/20 DIVISION MANAGER DATE APPROVED: 10/29/20 PUBLIC WORKS DIRECTOR / CITY ENGINEER DATE	CITY OF MORENO VALLEY PUBLIC WORKS DEPARTMENT - CAPITAL PROJECTS DIVISION **WATER LINE (LARGER THAN 12" DIA) TRENCH BACKFILL AND ROADWAY REPAIR**
		STANDARD PLAN **MVSI-132F-2** SHEET 6 OF 6